पेटट कार्यालय
शासकीय जर्नल

OFFICIAL JOURNAL
OF
THE PATENT OFFICE

निर्गमन सं. 36/2014	शुक्रवार	दिनांक: 05/09/2014
ISSUE NO. 36/2014	FRIDAY	DATE: 05/09/2014

पेटट कार्यालय का एक प्रकाशन

PUBLICATION OF THE PATENT OFFICE

INTRODUCTION

In view of the recent amendment made in the Patents Act, 1970 by the Patents (Amendment) Act, 2005 effective from 01st January 2005, the Official Journal of The Patent Office is required to be published under the Statute. This Journal is being published on weekly basis on every Friday covering the various proceedings on Patents as required according to the provision of Section 145 of the Patents Act 1970. All the enquiries on this Official Journal and other information as required by the public should be addressed to the Controller General of Patents, Designs & Trade Marks. Suggestions and comments are requested from all quarters so that the content can be enriched.

(**Chaitanya Prasad**)
CONTROLLER GENERAL OF PATENTS, DESIGNS & TRADE MARKS

5TH SEPTEMBER, 2014

CONTENTS

THE PATENT OFFICE
KOLKATA, 05/09/2014
Address of the Patent Offices/Jurisdictions
The following are addresses of all the Patent Offices located at different places having their Territorial Jurisdiction on a Zonal basis as shown below:-

1	Office of the Controller General of Patents, Designs & Trade Marks, Boudhik Sampada Bhavan, Near Antop Hill Post Office,S.M.Road,Antop Hill, Mumbai – 400 037 Phone: (91)(22) 24123311, Fax : (91)(22) 24123322 E-mail: cgpdtm@nic.in	4	The Patent Office, Government of India, Intellectual Property Rights Building, G.S.T. Road, Guindy, Chennai – 600 032. Phone: (91)(44) 2250 2081-84 Fax : (91)(44) 2250 2066 E-mail: chennai-patent@nic.in ❖ The States of Andhra Pradesh, Karnataka, Kerala, Tamil Nadu and the Union Territories of Puducherry and Lakshadweep.
2	The Patent Office, Government of India, Boudhik Sampada Bhavan, Near Antop Hill Post Office,S.M.Road,Antop Hill, Mumbai – 400 037 Phone: (91)(22) 24137701 Fax: (91)(22) 24130387 E-mail: mumbai-patent@nic.in ❖ The States of Gujarat, Maharashtra, Madhya Pradesh, Goa and Chhattisgarh and the Union Territories of Daman and Diu & Dadra and Nagar Haveli	5	The Patent Office (Head Office), Government of India, Boudhik Sampada Bhavan, CP-2, Sector –V, Salt Lake City, Kolkata- 700 091 Phone: (91)(33) 2367 1943/44/45/46/87 Fax: (91)(33) 2367 1988 E-Mail: kolkata-patent@nic.in ❖ Rest of India
3	The Patent Office, Government of India, Boudhik Sampada Bhavan, Plot No. 32., Sector-14, Dwarka, New Delhi – 110075 Phone: (91)(11) 2808 1921 – 25 Fax: (91)(11) 2808 1920 & 2808 1940 E.mail: delhi-patent@nic.in ❖ The States of Haryana, Himachal Pradesh, Jammu and Kashmir, Punjab, Rajasthan, Uttar Pradesh, Uttaranchal, Delhi and the Union Territory of Chandigarh.		

Website: www.ipindia.nic.in
www.patentoffice.nic.in

All applications, notices, statements or other documents or any fees required by the Patents Act, 1970 and The Patents (Amendment) Act, 2005 or by the Patents (Amendment) Rules, 2006 will be received only at the appropriate offices of the Patent Office.

Fees: The Fees may either be paid in cash or may be sent by Bank Draft or Cheques payable to the Controller of Patents drawn on a scheduled Bank at the place where the appropriate office is situated.

पेटेंट कार्यालय

कोलकाता, दिनांक 05/09/2014

कार्यालयों के क्षेत्राधिकार के पते

विभिन्न जगहों पर स्थित पेटेंट कार्यालय के पते आंचलिक आधार पर दर्शित उनके प्रादेशिक अधिकार क्षेत्र के साथ नीचे दिए गए है:-

1	कार्यालय : महानियंत्रक, एकस्व, अभिकल्प तथा व्यापार चिहन, एंटोप हिल डाकघर के समीप, एस. एम. रोड, एंटोप हिल, मुम्बई- 400 037, भारत, फोन: (91) (22) 24123311 फ़ैक्स: (91) (22) 24123322 ई. मेल: cgpdtm@nic.in	4	पेटेंट कार्यालय, भारत सरकार इंटेलेक्चुअल प्रॉपर्टी राइट्स बिल्डिंग, इंडस्ट्रियल इस्टेट एसआईडीसीओ आरएमडी गोडाउन एरिया एडजसेन्ट टु ईगल फ्लास्क, जी. एस. टी. रोड, गायन्डी चेन्नई - 600 032. फोन: (91)(44) 2250 2081-84 फ़ैक्स: (91)(44) 2250-2066 ई. मेल: chennai-patent@nic.in ❖ आन्ध्र प्रदेश, कर्नाटक, केरल, तमिलनाडु तथा पुडुचेरी राज्य क्षेत्र एवं संघ शासित क्षेत्र, लक्षदीप
2	पेटेंट कार्यालय, भारत सरकार बौद्धिक संपदा भवन, एंटोप हिल डाकघर के समीप, एस. एम. रोड, एंटोप हिल, मुम्बई- 400 037, फोन: (91) (22) 24137701 फ़ैक्स: (91) (22) 24130387 ई. मेल: Mumbai-patent@nic.in ❖ गुजरात, महाराष्ट्र, मध्य प्रदेश, गोवा तथा छत्तीसगढ़ राज्य क्षेत्र एवं संघ शासित क्षेत्र, दमन तथा दीव, दादर और नगर हवेली.	5	पेटेंट कार्यालय, भारत सरकार कोलकाता, (प्रधान कार्यालय) बौद्धिक संपदा भवन, सीपी-2, सेक्टर- V, साल्ट लेक सिटी, कोलकाता-700 091, भारत. फोन: (91)(33) 2367 1943/44/45/46/87 फ़ैक्स:/Fax: (91)(33) 2367 1988 ई. मेल: kolkata-patent@nic.in ❖ भारत का अवशेष क्षेत्र
3	पेटेंट कार्यालय, भारत सरकार बौद्धिक संपदा भवन, प्लॉट सं. 32, सेक्टर- 14, द्वारका, नई दिल्ली- 110 075. फोन: (91)(11) 2808 1921-25 फ़ैक्स: (91)(11) 2808 1920, 2808 1940 ई. मेल: delhi-patent@nic.in हरियाणा, हिमाचल प्रदेश, जम्मू तथा कश्मीर, पंजाब,राजस्थान, उत्तर प्रदेश, दिल्ली तथा उत्तरांचल राज्य क्षेत्रों, एवं संघ शासित क्षेत्र चंडीगढ़		

वेबसाइट: http://www.ipindia.nic.in

www.patentoffice.nic.in

पेटेंट अधिनियम, 1970 तथा पेटेंट (संशोधन) अधिनियम, 2005 अथवा पेटेंट (संशोधन) नियम, 2006 द्वारा वांछित सभी आवेदन, सूचनाए, विवरण या अन्य दस्तावेज़ या कोई शुल्क पेटेंट कार्यालय के केवल उपयुक्त कार्यालय में स्वीकृत होंगे।

शुल्क: शुल्क या तो नगद रूप में या Controller of Patents के नाम में देय बैंक ड्राफ्ट या चेक के द्वारा भेजी जा सकती है जो उसी स्थान के किसी अनुसूचित बैंक में प्रदत्त हो जहाँ उपयुक्त कार्यालय स्थित है ।

SPECIAL NOTICE

18 Months publication as required under Section 11A of the Patents Act, 1970 as amended by the Patents (Amendment) Act, 2005.

Notice is hereby given that any person at any time before the grant of Patent may give representation by way of opposition to the Controller of Patents at appropriate office on the ground and in a manner specified under section 25(1) of the Patents (Amendment) Act, 2005 read with Rule 55 of the Patents (Amendment) Rules, 2006.

Notice is also given that if any interested person requests for copies of the complete specification, drawing and abstract of any application already published, the photocopy of the same can be supplied by the Patent Office as per the jurisdiction on payment of prescribed fees of Rs.8/- per page. If any further details are required to be obtained, the same can be provided by the respective Patent Offices on request.

(**Chaitanya Prasad**)
CONTROLLER GENERAL OF PATENTS, DESIGNS & TRADE MARKS

SPECIAL NOTICE

Under the new provision of the Patents Act, 1970 as amended by the Patents (Amendment) Act, 2005 and Rules there under, Publication of the matter relating to Patents in the Official Gazette of India Part III, Section 2 has been discontinued and instead The Official Journal of the Patent Office is being published containing all the activities of The Patent Office such as publication of all the patent applications after 18th months , grant of patents & all other information in respect of the proceedings as required under the provisions of the Patents (Amendment) Act, 2005 and Rules thereunder on weekly basis on every **Friday**.

The Journal is uploaded in the website every Friday. So Paper form and CD-ROM form of the Journal are discontinued from 01/01/2009.

SPECIAL NOTICE

Every effort is being taken to publish all the patent applications under section 11(A) of the Patents Act. However, if duplication of publication of any application is found, then earlier date of publication will be taken for the purpose of provisional protection for applicant and Patent Office will grant Patent not before six months from the date of second publication, provided that there is there is no third party representation.

Early Publication:

The following patent applications have been published under section 11A (2) of The Patents (Amendment) Act 2005 and rule 24A of The Patents (Amendment) Rules, 2006. Any person may file representation by way of opposition to the Controller of Patents at the appropriate office against the grant of the patent in the prescribed manner under section 25(1) of the Patents (Amendment) Act 2005 read with the rule 55 of The Patents (Amendment) Rules, 2006:

(12) PATENT APPLICATION PUBLICATION

(21) Application No.2524/MUM/2014 A

(19) INDIA

(22) Date of filing of Application :06/08/2014

(43) Publication Date : 05/09/2014

(54) Title of the invention : SMART FAN

(51) International classification	:G08B13/191, G08B29/18, G08B13/193	(71)**Name of Applicant :** **1)SHRI GURU GOBIND SINGHJI. INSTITUTE OF ENGINEERING AND TECHNOLOGY.** Address of Applicant :THE DIRECTOR, SGGS, INSTITUTE OF ENGINEERING AND TECHNOLOGY, VISHNUPURI, NANDED-431606 MAHARASHTRA (INDIA) **2)TAMSHETE RAHUL BHIMASHANKAR**
(31) Priority Document No	:NA	
(32) Priority Date	:NA	
(33) Name of priority country	:NA	
(86) International Application No	:NA	
Filing Date	:NA	(72)**Name of Inventor :** **1)TAMSHETE RAHUL BHIMASHANKAR** **2)L. M. WAGHMARE** **3)V. G. ASUTKAR**
(87) International Publication No	: NA	
(61) Patent of Addition to Application Number	:NA	
Filing Date	:NA	
(62) Divisional to Application Number	:NA	
Filing Date	:NA	

(57) Abstract :

In the system we are using the PIR sensor, relay, transistor, resistor and a bypass switch. PIR sensor is operated over 5V only. PIR (pyroelectric infrared radiation) sensor is used to detect the presence of moving human. Relay is used to switch the fan ON and OFF. Transistor is used to energies the coil of the relay. Bypass switch is used for using the fan in either automatic or manual mode. When a human presence is detected by the PIR sensor, it generates voltage on its output pin. The output of the PIR sensor is given to the base of the transistor through a resistor. Transistor acts as a switch here. On detection of human presence the signal coming from PIR sensor switches on the transistor and hence the relay. Relay is connected to the transistor. The relay is also connected to the fans wire. Relay used here acts as a switch for switching the fan ON and OFF. By the use of this system, the fan will be ON only in the presence of any human. The only limitation is that sensor detects moving human only. To overcome this, strategy used is, if a human can not move continuously then move the sensor continuously. This strategy made the system perfect. Sometimes there is a condition or requirement where we want to run the fan in absence of human also. To achieve this condition, we have used a bypass switch. The bypass switch used for operating the fan in manual mode is connected in parallel with this relay. Since, relay is used to control the power supplied to the fan in the presence of human being, we are bypassing this relay and operating the fan in manual mode.

No. of Pages : 6 No. of Claims : 3

(12) PATENT APPLICATION PUBLICATION
(21) Application No.2315/MUM/2014 A
(19) INDIA
(22) Date of filing of Application :16/07/2014
(43) Publication Date : 05/09/2014

(54) Title of the invention : MICROCANTILEVER BIOSENSOR CHIP

(51) International classification	:G01N27/16, G01N27/12	(71)**Name of Applicant :**
(31) Priority Document No	:NA	**1)ANSARI MOHD. ZAHID**
(32) Priority Date	:NA	Address of Applicant :IIITDM-JABALPUR, KHAMARIA, JABALPUR 482005 MADHYA PRADESH, INDIA
(33) Name of priority country	:NA	(72)**Name of Inventor :**
(86) International Application No	:NA	**1)ANSARI MOHD. ZAHID**
Filing Date	:NA	
(87) International Publication No	: NA	
(61) Patent of Addition to Application Number	:NA	
Filing Date	:NA	
(62) Divisional to Application Number	:NA	
Filing Date	:NA	

(57) Abstract :
A piezoresistive microcantilever biochip useful for detecting and identifying the presence of clinically important analytes in liquid or gaseous samples is disclosed. The biochip consist pairs of three paddled cantilever designs of different sensitivities in an array form and in differential readout arrangement. The cantilevers designs are named high sensitive, very high sensitive and ultra high sensitive, and have, respectively, there, five and seven identical rectangular holes. And, the piezoresistor wrapped around the holes. The microcantilever designs disclosed here can also be used in individual formation on a chip. The novel cantilever designs disclosed here have much higher design sensitivity than the currently available ones, and therefore are best suited to improve the detection sensitivity of piezoresistive microcantilever biosensors. The array arrangement of these cantilevers when used on a single chip can result in a universal and dynamic detection range biochip.

No. of Pages : 11 No. of Claims : 4

(12) PATENT APPLICATION PUBLICATION
(21) Application No.2421/CHE/2014 A
(19) INDIA
(22) Date of filing of Application :15/05/2014
(43) Publication Date : 05/09/2014

(54) Title of the invention : POWER MULTIPLYING MACHINE

(51) International classification :g01d
(31) Priority Document No :NA
(32) Priority Date :NA
(33) Name of priority country :NA
(86) International Application No :NA
Filing Date :NA
(87) International Publication No : NA
(61) Patent of Addition to Application Number :NA
Filing Date :NA
(62) Divisional to Application Number :NA
Filing Date :NA

(71)**Name of Applicant :**
1)A. CHANDRA SEKHAR
Address of Applicant :B-401, MATRUSHRI APTS, HYDERGUDA, BASHEERBAGH, HYDERABAD - 5000 029 Andhra Pradesh India
(72)**Name of Inventor :**
1)A. CHANDRA SEKHAR

(57) Abstract :
The present invention deals with enhancing of low input electrical power to high output Mechanical power there by increasing the efficiency of the machine, and so shall be called as TOWER MULTIPLYING MACHINE. DEFINITION AND TERMINOLOGY: MAGNET SET : A set of magnets arranged one beside the other as shown in figure [100] with similar poles on same side shall here after be called as magnet set and shall be used through out the description of this project. LENGTH OF THE MAGNET SET: The distance from one end of the magnet set to the other end represented by letter I in figure [100] is called as Magnet set length and shall be used through out the description of this project. THICKNESS OR WIDTH OF THE MAGNET SET: The width or thickness of the magnet set as shown in the figure[100] by letter t shall be called as magnet set width or thickness and shall be used through out the description of this project. HEIGHT OF THE MAGNET SET: The average height of the magnets arranged in a magnet set as shown in figure[100] by letter h is said to be the Magnet set height and shall be used through out the description of this project. MAGNETIC DISK : A set of magnet sets arranged on a disk made up of any material in a circular manner in the form of arcs which are equidistant from each other constitutes a magnetic disk figure[400] and shall be used through out the description of this project.

No. of Pages : 20 No. of Claims : 9

(12) PATENT APPLICATION PUBLICATION
(21) Application No.3656/CHE/2013 A
(19) INDIA
(22) Date of filing of Application :19/08/2013
(43) Publication Date : 05/09/2014

(54) Title of the invention : TOUCH BASED ELECTRICAL SWITCH WITH CUSTOMIZABLE FACEPLATE

(51) International classification :g06f
(31) Priority Document No :NA
(32) Priority Date :NA
(33) Name of priority country :NA
(86) International Application No :NA
Filing Date :NA
(87) International Publication No : NA
(61) Patent of Addition to Application Number :NA
Filing Date :NA
(62) Divisional to Application Number :NA
Filing Date :NA

(71)**Name of Applicant :**
1)CHANDRAPPA NATARAJ BANGALORE
Address of Applicant :NO: A-305, BLOCK 1, KSSIDC COMPLEX, ELECTRONICS CITY, BANGALORE - 560 100 Karnataka India
(72)**Name of Inventor :**
1)CHANDRAPPA NATARAJ BANGALORE

(57) Abstract :
An Improvised Electrical Modular Switch comprising of a customizable touch based Face Plate (A) containing electronics behind it, constantly measuring capacitance in the touch area (B). Touch Board (C) is glued to Touch Glass (B). Light Emitting Devices behind touch surface illuminates the same. Embedded microcontroller (C) makes it easier to interact with outside world using various connectivity technologies like wifi/zigbee/IR. The Touch Surface is an insulator with no air gaps or moving parts. Multiple switches and dimmers of different kinds are incorporated in the same enclosure. A host of power saving features by means of microcontrollers are also incorporated in the switch to improve efficiency and save power. Power Supply Board and Connector Assembly (G) also mounted on the Mounting Frame (E). Bezel (K) is sandwiched between the Fact Plate (A) and the Bezel Holding Plate (I). The complete assembly is snap fitted into Electronic Enclosure (L).

No. of Pages : 11 No. of Claims : 4

(12) PATENT APPLICATION PUBLICATION
(21) Application No.4114/CHE/2014 A
(19) INDIA
(22) Date of filing of Application :22/08/2014
(43) Publication Date : 05/09/2014

(54) Title of the invention : A NOVEL HYDROGEL FOR BONE TISSUE ENGINEERING APPLICATIONS

(51) International classification :c12n
(31) Priority Document No :NA
(32) Priority Date :NA
(33) Name of priority country :NA
(86) International Application No :NA
Filing Date :NA
(87) International Publication No : NA
(61) Patent of Addition to Application Number :NA
Filing Date :NA
(62) Divisional to Application Number :NA
Filing Date :NA

(71)**Name of Applicant :**
1)SRM UNIVERSITY
Address of Applicant :KATTANKULATHUR - 603 203 Tamil Nadu India
(72)**Name of Inventor :**
1)DR. NAGARAJAN SELVAMURUGAN
2)MS. SHANKAR DHIVYA
3)MR. SELVARAJ VIMALRAJ
4)MR. SEKARAN SARAVANAN

(57) Abstract :
The worldwide incidence of bone disorders and pathological defects is treading steeply upwards. Engineered bone tissue has been viewed as a potential alternative to the conventional use of bone grafts. Thus, the goal of bone tissue engineering is reconstruction of living tissues with the help of biodegradable scaffolds/hydrogels for the purpose of replacement of damaged or lost bone tissue. We found that a thermosensitive injectable hydrogel composed of a cationic polysaccharide doped with divalent metal ion formed from a thermally induced proton transfer and amide bond introduced by a salt solution with a concentration of 400 mM. Additionally, the hydrogel possess ceramic particles with an average particle diameter of 150 nm in it. The prepared hydrogel was analyzed by the physicochemical characteristic studies such as SEM, EDX, XRD, FT-IR and in vitro swelling, biomineralization studies were also carried out. In vitro characterization of the prepared hydrogel exhibited a non-toxic, bio-compatible nature and promoted osteoblastic lineage differentiation from mouse mesenchymal stem cells (mMSCs). In addition, the inclusion of n-HAp in the hydrogel promoted bone formation in vivo. Thus, these findings indicate that the prepared novel composition of hydrogel may have potential applications for bone tissue engineering.

No. of Pages : 31 No. of Claims : 13

(12) PATENT APPLICATION PUBLICATION
(21) Application No.383/CHE/2014 A
(19) INDIA
(22) Date of filing of Application :29/01/2014
(43) Publication Date : 05/09/2014

(54) Title of the invention : FORMWORK AND METHOD FOR CONSTRUCTING FAMILY OF DOME - LIKE SHELL STRUCTURES

(51) International classification :e04g
(31) Priority Document No :NA
(32) Priority Date :NA
(33) Name of priority country :NA
(86) International Application No :NA
Filing Date :NA
(87) International Publication No : NA
(61) Patent of Addition to Application Number :NA
Filing Date :NA
(62) Divisional to Application Number :NA
Filing Date :NA

(71)**Name of Applicant :**
1)UTSAV MATHUR
Address of Applicant :N-102, RENAISSANCE EXOTICA, JAKKUR PLANTATION, YELAHANKA, BANGALORE 560 064 Karnataka India
(72)**Name of Inventor :**
1)UTSAV MATHUR

(57) Abstract :
The present invention discloses a method for building a dome by reusing a basic segment. The method comprises the steps of determining a shape of the dome and determining a structure and dimensions of a basic structure unit of the dome named as a formwork. The method further comprises bending the formwork in a desired shape, pivoting the formwork and supporting the pivoted formwork through a support truss and mounting the formwork over a bas structure. The method further comprises pouring a filler material in the formwork and repeating the filling work in positions that are adjacent to an initial positioning of formwork.

No. of Pages : 20 No. of Claims : 5

(12) PATENT APPLICATION PUBLICATION
(21) Application No.4077/CHE/2014 A
(19) INDIA
(22) Date of filing of Application :21/08/2014
(43) Publication Date : 05/09/2014

(54) Title of the invention : COCO SAP CHILLER

(51) International classification :a01j
(31) Priority Document No :NA
(32) Priority Date :NA
(33) Name of priority country :NA
(86) International Application No :NA
Filing Date :NA
(87) International Publication No : NA
(61) Patent of Addition to Application Number :NA
Filing Date :NA
(62) Divisional to Application Number :NA
Filing Date :NA

(71)**Name of Applicant :**
1)INDIAN COUNCIL OF AGRICULTURAL RESEARCH
Address of Applicant :DIRECTOR, CENTRAL PLANTATION CROPS RESEARCH INSTITUTE (CPCRI), KASARAGOD - 671 124 Kerala India
(72)**Name of Inventor :**
1)AUGUSTINE JOSEPH
2)K.B. HEBBAR

(57) Abstract :
Kalparasa (coconut sap or neera) extracted from coconut spadix is a healthy nutritious drink. It slowly trickles from the cut surface of the spadix and during this lengthy collection period coupled with unhygienic and unorganized way of its collection the sap gets fermented. The present invention discloses a portable coco sap chiller, for collecting farm fresh, hygienic and unfermented coconut sap comprising of a spadix holder, a sap collection container, a funnel, a hollow PVC pipe and a heat insulating jacket. The cut end of the spadix is inserted to the hollow PVC pipe through a spadix holder and the sap dripping from the cut surface of spadix trickles through the funnel to the sap collection container. The sap collection container is bound by ice cubes. Side walls of the PVC pipe from outside are covered with an insulating jacket. The sap thus collected can be stored fresh for any length of time under refrigerated condition.

No. of Pages : 12 No. of Claims : 9

(12) PATENT APPLICATION PUBLICATION
(21) Application No.3910/CHE/2014 A
(19) INDIA
(22) Date of filing of Application :08/08/2014
(43) Publication Date : 05/09/2014

(54) Title of the invention : ENCOMPASSING DEMAND DISPATCH FEATURE IN AUTOMATIC VOLTAGE REGULATOR (AVR) OF SYNCHRONOUS GENERATOR

(51) International classification :h02p
(31) Priority Document No :NA
(32) Priority Date :NA
(33) Name of priority country :NA
(86) International Application No :NA
Filing Date :NA
(87) International Publication No : NA
(61) Patent of Addition to Application Number :NA
Filing Date :NA
(62) Divisional to Application Number :NA
Filing Date :NA

(71)**Name of Applicant :**
1)MR. R. SRIRAM
Address of Applicant :F 1: 76, VETRI'S ANGELICA, PADMAVATHY NAGAR MAIN ROAD, (NEAR PUTRU KOVIL), MADAMBAKKAM, CHENNAI - 600 126 Tamil Nadu India
(72)**Name of Inventor :**
1)MR. R. SRIRAM
2)MRS. GAYATHRI DEVI. R

(57) Abstract :
A method of preventing voltage collapse in synchronous generator by encompassing demand dispatch feature in automatic voltage regulator (AVR) of Synchronous Generator and comprises steps to predict both the voltage stability and the oscillatory stability due to switching of loads using the concepts of Gain margin, Phase margin of AVR and Gain of Loaded Generator.

No. of Pages : 23 No. of Claims : 10

(12) PATENT APPLICATION PUBLICATION
(21) Application No.4058/CHE/2014 A
(19) INDIA
(22) Date of filing of Application :20/08/2014
(43) Publication Date : 05/09/2014

(54) Title of the invention : A PROCESS FOR PREPARING TRADITIONAL SAMBHAR IN 5 MINISTUES AND METHOD FOR PREPARING THE SAME

(51) International classification :a23l
(31) Priority Document No :NA
(32) Priority Date :NA
(33) Name of priority country :NA
(86) International Application No :NA
Filing Date :NA
(87) International Publication No : NA
(61) Patent of Addition to Application Number :NA
Filing Date :NA
(62) Divisional to Application Number :NA
Filing Date :NA

(71)**Name of Applicant :**
1)M. DARSHANI
Address of Applicant :NO. 515G, DEVI ILLAM, BHAKTA NAGAR, PERIYAKURICHI, NEYVELI - 607 802, VIRUDHACHALAM TALUK, CUDDALORE DISTRICT Tamil Nadu India
(72)**Name of Inventor :**
1)M. DARSHANI

(57) Abstract :
In traditional method of making Sambhar the cooking time is high. The Fresh Toor Toor dhal is used for preparation of Sambhar under traditional cooking methods. The Toor dhal used in Sambhar is usually a complex compound with high density. In order to use the same, the Toor dhal shall be cooked in the water for 15 to 30 minutes depend upon the quality and freshness of the Toor dhal. This process will convert the complex compound into simple one. Time consumption is the major problem in Sambhar cooking. Because of this many working professionals are searching for instant Sambhar mixes which are available in the market which takes 12 to 20 minutes as cooking time. The present invention discloses the novel method of making Sambhar mix and preparation of Sambhar using the mix in less than 7 min. The present invention comprises of three things which play a key role in this instant Sambhar mix. 1 precooked and dried Toor dhal 2 spice powder 3 cooking recipe. The three things combine together will bring the delicious Sambhar in five minutes.

No. of Pages : 17 No. of Claims : 5

(12) PATENT APPLICATION PUBLICATION
(19) INDIA
(22) Date of filing of Application :09/01/2014
(21) Application No.96/CHE/2014 A
(43) Publication Date : 05/09/2014

(54) Title of the invention : RAIL FIRE EXTINGUISHER

(51) International classification :A62C
(31) Priority Document No :NA
(32) Priority Date :NA
(33) Name of priority country :NA
(86) International Application No :NA
Filing Date :NA
(87) International Publication No : NA
(61) Patent of Addition to Application Number :NA
Filing Date :NA
(62) Divisional to Application Number :NA
Filing Date :NA

(71)**Name of Applicant :**
1)DR. B. KANNAPIRAN
Address of Applicant :DEPARTMENT OF INSTRUMENT & CONTROL ENGINEERING, KALASALINGAM UNIVERSITY, ANAND NAGAR, KRISHNANKOIL, SRIVILLIPUTHUR - 626 126 Tamil Nadu India
2)V. SELVAM
3)C. KARTHIK
4)R. ALAGESHKANNA
5)J. MATHAN
6)R. MURALIVIJAY
(72)**Name of Inventor :**
1)DR. B. KANNAPIRAN
2)V. SELVAM
3)C. KARTHIK
4)R. ALAGESHKANNA
5)J. MATHAN
6)R. MURALIVIJAY

(57) Abstract :
Now a day, fire accidents in the railways are increased drastically. Fire on a running train is more catastrophic than on a stationary one, since fanning by winds helps spread the fire to other coaches. Moreover, passengers sometime jump out of a running train on fire resulting in increased casualties. In this project we have proposed a new technique for preventing and controlling the fire accident in railways. Here we have used number of temperature detectors and electronic circuitry to sense and prevent the fire accidents. This proposed design, exact coach and exact place can be identified by means of various temperature transmitters and the controller implemented is to react the necessary action to that at right place. The water is sprayed all over the compartment through pipelines connected with enough water supply. Each compartment is provided with water supply. So that fire accident caused in any compartment can be detected and compromised. This leads to saves the lives. Proposed design also provides the necessary information to the loco pilot and the designed automatic braking system will stop the train.

No. of Pages : 8 No. of Claims : 5

(12) PATENT APPLICATION PUBLICATION
(21) Application No.743/KOL/2014 A
(19) INDIA
(22) Date of filing of Application :09/07/2014
(43) Publication Date : 05/09/2014

(54) Title of the invention : A NOVEL TAMPER RESISTANT, BARCODED SECURITY LOCK.

(51) International classification	:G08B13/196	(71)**Name of Applicant :**
(31) Priority Document No	:NA	**1)BANKA KUNAL**
(32) Priority Date	:NA	Address of Applicant :3-B, CAMAC STREET, KOLKATA-700 016, WEST BENGAL, INDIA.
(33) Name of priority country	:NA	(72)**Name of Inventor :**
(86) International Application No	:NA	**1)BANKA KUNAL**
Filing Date	:NA	
(87) International Publication No	: NA	
(61) Patent of Addition to Application Number	:NA	
Filing Date	:NA	
(62) Divisional to Application Number	:NA	
Filing Date	:NA	

(57) Abstract :
The present invention aims at a novel, sophisticated security lock for providing protection to revenue-generating devices, such as, utility meters like electric, gas, water and vehicle meters. To achieve this objective, this invention pertains to a novel tamper- resistant barcoded security lock having a male (1) and a female (2) part, the said male part having a rectangular or trapezoidal head carrying a stem (3) with a plurality of fins (4) bending upwardly at an angle and ending in a groove, and the said female part being a hollow body with broad front and rear surfaces with narrow sides having a serrated/ fluted structure with an extended lip (5), a flat surface on top having an opening or recess for allowing the stem to pass through, each node or fluted part of the serration carrying a lug or protrusion slanting backwards (6) which prevents the said fins from being pulled out once they are pushed in with the sealing wire without damaging or destroying the seal, the said female part further carries a small bracket attachment (7) meant to carry a tag bearing specific signs, remarks and/or statements and also to allow spiralled wire (8) securely moulded with the base (9) of the said female part and of sufficient length to be wound /inserted through the object or substrate to be secured/locked and led through the said bracket and thereafter through the holes (10) provided in the said female part (2) to be followed by application of manual pressure forcing the stem of the male part to travel/move towards the base creating an effective seal.

No. of Pages : 21 No. of Claims : 9

Publication After 18 Months:

The following Patent Applications have been published under Section 11A (3) of The Patents (Amendment) Act, 2005. Any Person may file representation by way of opposition to the Controller of Patents at the appropriate office against the grant of the patent in the prescribed manner under section 25(1) of the Patents (Amendment) Act, 2005 read with the rule 55 of The Patents (Amendment) Rules, 2006:

(12) PATENT APPLICATION PUBLICATION

(21) Application No.10073/DELNP/2012 A

(19) INDIA

(22) Date of filing of Application :20/11/2012

(43) Publication Date : 05/09/2014

(54) Title of the invention : PROCESS AND APPARATUS FOR THE REDUCTION OF GASOLINE BENZENE CONTENT BY ALKYLATION WITH DILUTE ETHYLENE

(51) International classification	:C07C2/66,C07C15/06,B01J8/02	(71)**Name of Applicant :**
(31) Priority Document No	:12/813533	**1)UOP LLC**
(32) Priority Date	:11/06/2010	Address of Applicant :25 East Algonquin Road P. O. Box 5017 Des Plaines IL 60017 5017 U.S.A.
(33) Name of priority country	:U.S.A.	(72)**Name of Inventor :**
(86) International Application No	:PCT/US2011/038673	**1)NICHOLAS Christopher P.**
Filing Date	:01/06/2011	**2)BHATTACHARYYA Alakananda**
(87) International Publication No	:WO 2011/156182	
(61) Patent of Addition to Application Number	:NA	
Filing Date	:NA	
(62) Divisional to Application Number	:NA	
Filing Date	:NA	

(57) Abstract :
The process and apparatus converts ethylene in a dilute ethylene stream and dilute benzene in an aromatic containing stream via alkylation to heavier hydrocarbons. The catalyst may be a zeolite such as UZM 8. The catalyst is resistant to feed impurities such as hydrogen sulfide carbon oxides and hydrogen and selectively converts benzene. At least 40 wt % of the ethylene in the dilute ethylene stream and at least 20 wt % of the benzene in the dilute benzene stream can be converted to heavier hydrocarbons.

No. of Pages : 29 No. of Claims : 10

(12) PATENT APPLICATION PUBLICATION
(19) INDIA
(22) Date of filing of Application :20/11/2012
(21) Application No.10074/DELNP/2012 A
(43) Publication Date : 05/09/2014

(54) Title of the invention : PROCESS FOR PURIFYING TEREPHTHALIC ACID

(51) International classification :C07C51/48,C07C63/26,C07B63/00
(31) Priority Document No :61/360206
(32) Priority Date :30/06/2010
(33) Name of priority country :U.S.A.
(86) International Application No :PCT/US2011/040467
Filing Date :15/06/2011
(87) International Publication No :WO 2012/005902
(61) Patent of Addition to Application Number :NA
Filing Date :NA
(62) Divisional to Application Number :NA
Filing Date :NA

(71)**Name of Applicant :**
1)UOP LLC
Address of Applicant :25 East Algonquin Road P. O. Box 5017 Des Plaines Illinois 60017 5017 U.S.A.
(72)**Name of Inventor :**
1)BHATTACHARYYA Alakananda

(57) Abstract :
A process for purifying crude terephthalic acid comprising a contaminant at a first concentration the process comprising contacting the crude terephthalic acid with a solvent comprising an ionic liquid at purifying conditions to produce a solid terephthalic acid product having a second concentration of the contaminant lower than the first concentration.

No. of Pages : 14 No. of Claims : 10

(12) PATENT APPLICATION PUBLICATION
(19) INDIA
(22) Date of filing of Application :20/11/2012
(21) Application No.10075/DELNP/2012 A
(43) Publication Date : 05/09/2014

(54) Title of the invention : PROCESS FOR PRODUCING TEREPHTHALIC ACID

(51) International classification :C07C51/21,C07C63/26,C07C51/43
(31) Priority Document No :61/360297
(32) Priority Date :30/06/2010
(33) Name of priority country :U.S.A.
(86) International Application No :PCT/US2011/040482
Filing Date :15/06/2011
(87) International Publication No :WO 2012/012043
(61) Patent of Addition to Application Number :NA
Filing Date :NA
(62) Divisional to Application Number :NA
Filing Date :NA

(71)**Name of Applicant :**
1)UOP LLC
Address of Applicant :25 East Algonquin Road P.O. Box 5017 Des Plaines Illinois 60017 5017 U.S.A.
(72)**Name of Inventor :**
1)BHATTACHARYYA Alakananda
2)WALENGA Joel T.

(57) Abstract :
A process for producing terephthalic acid from para xylene. The process comprises forming a mixture comprising the para xylene a solvent a bromine source a catalyst and ammonium acetate; and oxidizing the para xylene by contacting the mixture with an oxidizing agent at oxidizing conditions to produce a solid oxidation product comprising terephthalic acid para toluic acid 4 carboxybenzaldehyde. The solvent comprises a carboxylic acid having from 1 to 7 carbon atoms and the catalyst comprises at least one of cobalt titanium manganese chromium copper nickel vanadium iron molybdenum tin cerium and zirconium.

No. of Pages : 15 No. of Claims : 10

(12) PATENT APPLICATION PUBLICATION
(19) INDIA
(22) Date of filing of Application :20/11/2012
(21) Application No.10076/DELNP/2012 A
(43) Publication Date : 05/09/2014

(54) Title of the invention : PROCESS FOR OXIDIZING ALKYL AROMATIC COMPOUNDS

(51) International classification :C07C63/14,C07C63/04,C07C51/21
(31) Priority Document No :61/360281
(32) Priority Date :30/06/2010
(33) Name of priority country :U.S.A.
(86) International Application No :PCT/US2011/040474
Filing Date :15/06/2011
(87) International Publication No :WO 2012/005903
(61) Patent of Addition to Application Number :NA
Filing Date :NA
(62) Divisional to Application Number :NA
Filing Date :NA

(71)**Name of Applicant :**
1)UOP LLC
Address of Applicant :25 East Algonquin Road P. O. Box 5017 Des Plaines Illinois 60017 5017 U.S.A.
(72)**Name of Inventor :**
1)BHATTACHARYYA Alakananda
2)WALENGA Joel T.

(57) Abstract :
A process and a mixture for oxidizing an alkyl aromatic compound comprises forming a mixture comprising the alkyl aromatic compound a solvent a bromine source a catalyst and ammonium acetate; and contacting the mixture with an oxidizing agent at oxidizing conditions to produce an oxidation product comprising at least one of an aromatic aldehyde an aromatic alcohol an aromatic ketone and an aromatic carboxylic acid. The solvent comprises a carboxylic acid having from 1 to 7 carbon atoms; and the catalyst comprises at least one of cobalt titanium manganese chromium copper nickel vanadium iron molybdenum tin cerium and zirconium.

No. of Pages : 17 No. of Claims : 10

(12) PATENT APPLICATION PUBLICATION
(19) INDIA
(22) Date of filing of Application :20/11/2012
(21) Application No.10077/DELNP/2012 A
(43) Publication Date : 05/09/2014

(54) Title of the invention : SPRAY HEAD FOR A UNIFORM FLUID DISTRIBUTION AND A FLUID DISTRIBUTION SYSTEM

(51) International classification :A62C31/05
(31) Priority Document No :PA 2010 00521
(32) Priority Date :15/06/2010
(33) Name of priority country :Denmark
(86) International Application No :PCT/DK2011/000048
Filing Date :21/05/2011
(87) International Publication No :WO 2011/157269
(61) Patent of Addition to Application Number :NA
Filing Date :NA
(62) Divisional to Application Number :NA
Filing Date :NA

(71)**Name of Applicant :**
1)DANFOSS SEMCO A/S
Address of Applicant :Middelfartvej 9 DK 5000 Odense C Denmark
(72)**Name of Inventor :**
1)KRISTENSEN Steen Gaardsted
2)WINDT Carsten
3)JEPSEN Jens Toft
4)BYGBJERG Henrik

(57) Abstract :
The present invention relates to a spray head for effective fire fighting. The spray head according to the present invention provides a uniform distribution of a fluid such as pressurised water over a relatively large area. To achieve this the spray head comprises a body defining a central axis and further comprising a fixation structure for fixing the spray head to a fluid supply system a fluid inlet directing fluid in a first direction a plurality of outlet holes arranged around the central axis and a flow path between the inlet and the holes wherein a first set of holes are located in such a way that the fluid is leaving the first set of holes in a second direction opposite to the first direction and wherein the body further comprises an arrangement for holding a fire actuation member.

No. of Pages : 21 No. of Claims : 14

(12) PATENT APPLICATION PUBLICATION
(19) INDIA
(22) Date of filing of Application :22/11/2012
(21) Application No.10130/DELNP/2012 A
(43) Publication Date : 05/09/2014

(54) Title of the invention : CELL SEARCH AND MEASUREMENT IN HETEROGENEOUS NETWORKS

(51) International classification :H04W48/16
(31) Priority Document No :61/354900
(32) Priority Date :15/06/2010
(33) Name of priority country :U.S.A.
(86) International Application No :PCT/EP2011/059830
Filing Date :14/06/2011
(87) International Publication No :WO 2011/157702
(61) Patent of Addition to Application Number :NA
Filing Date :NA
(62) Divisional to Application Number :NA
Filing Date :NA

(71)**Name of Applicant :**
1)TELEFONAKTIEBOLAGET L M ERICSSON (PUBL)
Address of Applicant :S 164 83 Stockholm Sweden
(72)**Name of Inventor :**
1)LINDOFF Bengt
2)LINDBOM Lars
3)PARKVALL Stefan

(57) Abstract :
An extended cell search procedure enables more inclusive measurement reports by mobile terminals operating in a heterogeneous network. The mobile terminal may be configured to conduct an extended cell search to enable better detection of signals transmitted from weaker cells. For mobile terminal with extended cell search capabilities the network sends an extended cell search message to the mobile terminal when there is a need for an extended cell search. In response to the extended cell search message the mobile terminal uses an extended cell search procedure rather than the normal cell search procedure (as specified in Rel 8 of the LTE standard) when performing cell searches.

No. of Pages : 26 No. of Claims : 32

(12) PATENT APPLICATION PUBLICATION
(19) INDIA
(22) Date of filing of Application :22/11/2012
(21) Application No.10131/DELNP/2012 A
(43) Publication Date : 05/09/2014

(54) Title of the invention : ENHANCING DS LITE WITH PRIVATE IPV4 REACHABILITY

(51) International classification :H04L29/06,H04L29/12
(31) Priority Document No :12/815,257
(32) Priority Date :14/06/2010
(33) Name of priority country :U.S.A.
(86) International Application No :PCT/IB2011/051941
Filing Date :02/05/2011
(87) International Publication No :WO 2011/158137
(61) Patent of Addition to Application Number :NA
Filing Date :NA
(62) Divisional to Application Number :NA
Filing Date :NA

(71)**Name of Applicant :**
1)TELEFONAKTIEBOLAGET L M ERICSSON (PUBL)
Address of Applicant :S 164 83 Stockholm Sweden
(72)**Name of Inventor :**
1)HADDAD Wassim

(57) Abstract :
A method implemented in a network element to make a first device assigned an IPv4 private address accessible to a second device using Internet Protocol Version 6 (IPv6) the method comprising receiving an IPv6 formatted data packet having a virtual IPv6 address as a destination address and having been sent from the second device; determining whether the virtual IPv6 address includes a representation prefix (RP); sending an address map query (AMQ) to a customer premise equipment (CPE) where the CPE stores a mapping between the virtual IPv6 address and a private IPv4 address of the first device; receiving an address map response (AMR) from the CPE with the private IPv4 address corresponding to the virtual IPv6 address; translating the IPv6 formatted data packet into an IPv4 formatted data packet; and sending the translated data packet to the CPE through an IPv4 over IPv6 tunnel.

No. of Pages : 23 No. of Claims : 10

(12) PATENT APPLICATION PUBLICATION
(21) Application No.10132/DELNP/2012 A
(19) INDIA
(22) Date of filing of Application :22/11/2012
(43) Publication Date : 05/09/2014

(54) Title of the invention : METHOD OF MANUFACTURING METAL BASE SUBSTRATE AND METHOD OF MANUFACTURING CIRCUIT BOARD

(51) International classification :H05K3/44
(31) Priority Document No :2010-108051
(32) Priority Date :10/05/2010
(33) Name of priority country :Japan
(86) International Application No :PCT/JP2011/058735
Filing Date :06/04/2011
(87) International Publication No :WO 2011/142198
(61) Patent of Addition to Application Number :NA
Filing Date :NA
(62) Divisional to Application Number :NA
Filing Date :NA

(71)**Name of Applicant :**
1)DENKI KAGAKU KOGYO KABUSHIKI KAISHA
Address of Applicant :1 1 Nihonbashi Muromachi 2 chome Chuo ku Tokyo 1038338 Japan
(72)**Name of Inventor :**
1)NISHI Taiki
2)MIYAKAWA Takeshi
3)YASHIMA Katsunori
4)Okoshi Kensuke
5)ISHIKURA Hidenori

(57) Abstract :
PROVIDED IS: A METHOD OF MANUFACTURING A HIGH-QUALITY AND HIGH HEAT-RADIATION METAL-BASE SUBSTRATE FOR HAVING HEAT-GENERATING ELECTRONIC PARTS MOUNTED THEREON, WHEREIN VOIDS DO NOT REMAIN IN AN INSULATION ADHESION LAYER THEREOF; AND A METHOD OF MANUFACTURING A CIRCUIT BOARD. A METAL-BASE SUBSTRATE (14) IS MADE BY EXECUTING: A DISPERSING PROCESS (S1) FOR DISPERSING A DISPERSE PHASE WITHIN A DISPERSION MEDIUM OF AN INSULATION ADHESIVE CONTAINING A DAMPNESS DISPERSING AGENT; AN INSULATION ADHESIVE LAMINATING PROCESS (S2) FOR LAMINATING AN INSULATION ADHESIVE (2) ON A ROLL-FORMED CONDUCTOR FOIL (1), WHILE PAYING OUT THE CONDUCTOR FOIL (1); A FIRST HARDENING PROCESS (S3) FOR HEATING THE INSULATION ADHESIVE (2) ON THE CONDUCTOR FOIL (1) TO FORM A COMPLEX (5) OF THE CONDUCTOR FOIL (1) AND A B-STAGE STATE INSULATION ADHESION LAYER (2A); A METAL-BASE MATERIAL LAMINATING PROCESS (S5) FOR ATTAINING A LAMINATE (7) BY LAMINATING A METAL BASE MATERIAL (6) ON THE B-STAGE STATE INSULATION ADHESION LAYER (2A); AND A SECOND HARDENING PROCESS (S6) FOR CHANGING THE B-STAGE STATE INSULATION ADHESION LAYER (2A) INTO A C-STAGE STATE INSULATION ADHESION LAYER (2B), BY HEATING AND PRESSURIZING THE LAMINATE (7) IN A PRESCRIBED CONDITION. SHEET-FORM CUTTING PROCESSES (S4, S15) FOR CUTTING THE COMPLEX (5) OR THE LAMINATE (7) INTO SHEET-FORM CAN BE EXECUTED, IF NECESSARY.

No. of Pages : 40 No. of Claims : 6

(12) PATENT APPLICATION PUBLICATION
(19) INDIA
(22) Date of filing of Application :22/11/2012
(21) Application No.10133/DELNP/2012 A
(43) Publication Date : 05/09/2014

(54) Title of the invention : THERMOCOMPRESSION MOTOR

(51) International classification :F02B75/00,F02B75/40,F02G3/02
(31) Priority Document No :10 2010 020 325.4
(32) Priority Date :12/05/2010
(33) Name of priority country :Germany
(86) International Application No :PCT/EP2011/057609
Filing Date :11/05/2011
(87) International Publication No :WO 2011/141508
(61) Patent of Addition to Application Number :NA
Filing Date :NA
(62) Divisional to Application Number :NA
Filing Date :NA

(71)**Name of Applicant :**
1)DAUBLEBSKY VON EICHHAIN Christian
Address of Applicant :Knollerstrasse 5 80802 M¼nchen Germany
(72)**Name of Inventor :**
1)DAUBLEBSKY VON EICHHAIN Christian

(57) Abstract :
The invention relates to a thermocompression motor comprising a cylinder (1), a piston (7), which divides the cylinder into a first Chamber (5) and a second Chamber (6), a heat exchanger (13) having at least one air Channel (13a), which connects the first Chamber (5) to the second Chamber (6), and at least one waste gas Channel (13b), which connects the second Chamber (6) to the outside surroundings, an intake unit (22), via which the first Chamber (5) is connected to the outside surroundings, and valve units (3, 3a, 3b) for Controlling the inflows and outflows in the Chambers (5, 6) of the cylinders (1) and in the Channels (13a, 13b) of the heat exchanger (13). In a first cycle or thermocompression cycle, the first and second Chambers (5, 6) are connected via the at least one air Channel (13a), whereby air is pushed out of the first Chamber (5) into the heat exchanger (13) and heated air is delivered from the heat exchanger (13) into the second Chamber (6). In a second cycle, f¼el that has been introduced is burned in the second Chamber (6). In a third cycle, only the connection of the second Chamber (6) the waste gas Channel (13b) is open during a subsequent volume increase of the first Chamber (5). In a fourth cycle, fresh air is suctioned into the first Chamber during a further volume increase of the first Chamber (5), while the connection between the first and second Chambers (5, 6) via the at least one air Channel (13a) is interrupted. Thus, a heat engine having high efficiency is created.

No. of Pages : 29 No. of Claims : 15

(12) PATENT APPLICATION PUBLICATION
(19) INDIA
(22) Date of filing of Application :22/11/2012

(21) Application No.10150/DELNP/2012 A
(43) Publication Date : 05/09/2014

(54) Title of the invention : VULCANIZING PRESS SYSTEM

(51) International classification :B29D30/00,B29D30/06,B29D30/56
(31) Priority Document No :10 2010 020 060.3
(32) Priority Date :11/05/2010
(33) Name of priority country:Denmark
(86) International Application No :PCT/EP2011/057553
Filing Date :10/05/2011
(87) International Publication No :WO 2011/141479
(61) Patent of Addition to Application Number :NA
Filing Date :NA
(62) Divisional to Application Number :NA
Filing Date :NA

(71)**Name of Applicant :**
1)SIEMPELKAMP MASCHINEN UND ANLAGENBAU GMBH & CO. KG
Address of Applicant :Siempelkampstrae 75 47803 Krefeld Germany
(72)**Name of Inventor :**
1)AUMLLER Steffen

(57) Abstract :
The invention relates to a vulcanizing press system for producing treads for retreading tires comprising a vulcanizing press (1) having a press frame (2) and one or more press levels (3) in which treads having a tire tread pattern are pressed from raw rubber strips and further comprising at least one charging device (6) for charging the vulcanizing press (1) with the raw rubber strips. Said system is characterized in that the charging device (6) comprises at least one charging cart (7) which can be moved in the longitudinal press direction and which at one or more levels comprises one or more loading trays (8) each having an endlessly revolving conveyor belt (9) wherein the charging cart (7) containing the raw rubber strips arranged on the loading trays (8) can be moved in the working direction (R) into the vulcanizing press (1).

No. of Pages : 23 No. of Claims : 12

(12) PATENT APPLICATION PUBLICATION
(19) INDIA
(22) Date of filing of Application :22/11/2012
(21) Application No.10151/DELNP/2012 A
(43) Publication Date : 05/09/2014

(54) Title of the invention : PRESSURE DENSITY DIFFERENTIAL DEVICE

(51) International classification :C25B9/00
(31) Priority Document No :61/282,998
(32) Priority Date :05/05/2010
(33) Name of priority country :U.S.A.
(86) International Application No :PCT/US2011/035331
Filing Date :05/05/2011
(87) International Publication No :WO 2011/140322
(61) Patent of Addition to Application Number :NA
Filing Date :NA
(62) Divisional to Application Number :NA
Filing Date :NA

(71)**Name of Applicant :**
1)BENHAM Roger A.
Address of Applicant :PO Box 120830 San Diego CA 92112 U.S.A.
(72)**Name of Inventor :**
1)BENHAM Roger A.

(57) Abstract :
An electrochemical cell provided with two half cells. A pressure or density differential is created between the cathode and anode electrodes each of which is contained in one of the half cells. The pressure or density differential is created by single or a multiple of sources including compression vacuum weight (gravity) of mass chemical molecular or pressure or density differentials created by thermal gradients.

No. of Pages : 25 No. of Claims : 24

(12) PATENT APPLICATION PUBLICATION
(19) INDIA
(22) Date of filing of Application :22/11/2012
(21) Application No.10152/DELNP/2012 A
(43) Publication Date : 05/09/2014

(54) Title of the invention : HYDROPHOBIZING OF FIBROUS MATERIALS WITH POLYORGANOSILOXANES

(51) International classification :C08G77/16,C08L83/06,C09D183/06
(31) Priority Document No :10164322.9
(32) Priority Date :28/05/2010
(33) Name of priority country :EPO
(86) International Application No :PCT/EP2011/058720
Filing Date :27/05/2011
(87) International Publication No :WO 2011/147959
(61) Patent of Addition to Application Number :NA
Filing Date :NA
(62) Divisional to Application Number :NA
Filing Date :NA

(71)**Name of Applicant :**
1)MOMENTIVE PERFORMANCE MATERIALS GMBH
Address of Applicant :Kaiser Wilhelm Allee Gebude V 7 51368 Leverkusen Germany
(72)**Name of Inventor :**
1)HUGGINS John
2)WAGNER Roland
3)SOCKEL Karl Heinz

(57) Abstract :
The present invention relates on the use of 1 3 dihydroxyalkyl functionalized polyorganosiloxanes in compositions for the treatment of materials having a fibrous structure such as leather furs textiles and paper. The invention further relates to a process for treating fibrous materials with waterproofing.

No. of Pages : 46 No. of Claims : 17

(12) PATENT APPLICATION PUBLICATION
(19) INDIA
(22) Date of filing of Application :22/11/2012
(21) Application No.10153/DELNP/2012 A
(43) Publication Date : 05/09/2014

(54) Title of the invention : DEVICE FOR TESTING FUEL INJECTORS AND CORRESPONDING METHOD

(51) International classification :F02M65/00,F02D41/20,F02M63/00
(31) Priority Document No :102010029493.4
(32) Priority Date :31/05/2010
(33) Name of priority country:Germany
(86) International Application No :PCT/EP2011/055818
Filing Date :13/04/2011
(87) International Publication No :WO 2011/151097
(61) Patent of Addition to Application Number :NA
Filing Date :NA
(62) Divisional to Application Number :NA
Filing Date :NA

(71)**Name of Applicant :**
1)ROBERT BOSCH GMBH
Address of Applicant :Postfach 30 02 20 70442 Stuttgart Germany
(72)**Name of Inventor :**
1)FRIEDMANN Jochen
2)GOESER Joachim
3)KUTTERUF Karl Martin
4)VOGEL Markus

(57) Abstract :
The invention relates to a device for testing fuel injectors, in particular of the piezoelectric type. The device comprises at least one, in particular bidirectional, interface for connecting an operating unit, at least one outlet for connecting at least one fuel injector, at least one integrated circuit and a microcontroller for controlling the integrated circuit and the integrated circuit and the microcontroller interact in such a way that the fuel injector can be tested as a function of its type and/or subtype, comprising at least the type piezoelectric with subtypes active high and active low.

No. of Pages : 10 No. of Claims : 11

(12) PATENT APPLICATION PUBLICATION
(19) INDIA
(22) Date of filing of Application :22/11/2012
(21) Application No.10154/DELNP/2012 A
(43) Publication Date : 05/09/2014

(54) Title of the invention : METHOD AND DEVICE FOR OPERATING AN ACTUATOR WITH A BRUSHLESS ELECTRIC MOTOR

(51) International classification :F02D11/10,F02D35/00,F02D41/24
(31) Priority Document No :10 2010 029 271.0
(32) Priority Date :25/05/2010
(33) Name of priority country :Germany
(86) International Application No :PCT/EP2011/057465
Filing Date :10/05/2011
(87) International Publication No :WO 2011/147672
(61) Patent of Addition to Application Number :NA
Filing Date :NA
(62) Divisional to Application Number :NA
Filing Date :NA

(71)**Name of Applicant :**
1)ROBERT BOSCH GMBH
Address of Applicant :Postfach 30 02 20 70442 Stuttgart Germany
(72)**Name of Inventor :**
1)GROSSMANN Alex
2)TOSUN Zeynep
3)SIEBER Udo
4)BUEHRLE Ralf

(57) Abstract :
THE INVENTION RELATES TO AN ACTUATOR SYSTEM (1), IN PARTICULAR FOR OPERATING A FLAP IN A MOTOR VEHICLE, COMPRISING: - A DRIVE (4) WITH AN ELECTRONICALLY COMMUTATED ELECTRIC MOTOR; - A MOVABLE ACTUATING ELEMENT (6); - A MECHANISM (5) WHICH COUPLES THE DRIVE TO THE ACTUATING ELEMENT (6), WITH THE RESULT THAT AN ADJUSTMENT OF THE ACTUATING ELEMENT IS BROUGHT ABOUT UPON ACTUATION OF THE DRIVE; - A POSITION SENSOR (7) FOR DETECTING A POSITION OF THE ACTUATING ELEMENT (6) ON THE ACTUATING ELEMENT (6) AND FOR PROVIDING A CORRESPONDING POSITION DESCRIPTION; - A CONTROL UNIT (3), IN ORDER TO ACTUATE THE DRIVE FOR MOVING THE ACTUATING ELEMENT (6); WHEREIN THE ELECTRIC MOTOR OF THE DRIVE (4) IS ELECTRONICALLY COMMUTATED, WHEREIN THE CONTROL UNIT (3) IS CONFIGURED IN ORDER TO PROVIDE ACTUATING SIGNALS TO THE ELECTRIC MOTOR FOR MOVING THE ACTUATING ELEMENT (6), WHICH ACTUATING SIGNALS ARE A FUNCTION OF THE PROVIDED POSITION DESCRIPTION AND BRING ABOUT A PREDEFINED DRIVE MOMENT AND/OR A PREDEFINED ROTATIONAL SPEED OF THE ELECTRIC MOTOR.

No. of Pages : 21 No. of Claims : 13

(12) PATENT APPLICATION PUBLICATION
(19) INDIA
(22) Date of filing of Application :22/11/2012
(21) Application No.10160/DELNP/2012 A
(43) Publication Date : 05/09/2014

(54) Title of the invention : VEGETABLE OIL BASED PRESSURE SENSITIVE ADHESIVES

(51) International classification :C09J7/02
(31) Priority Document No :61/352691
(32) Priority Date :08/06/2010
(33) Name of priority country :U.S.A.
(86) International Application No :PCT/US2011/039450
Filing Date :07/06/2011
(87) International Publication No :WO 2011/156378
(61) Patent of Addition to Application Number :NA
Filing Date :NA
(62) Divisional to Application Number :NA
Filing Date :NA

(71)**Name of Applicant :**
1)STATE OF OREGON ACTING BY AND THROUGH THE STATE BOARD OF HIGHER EDUCATION ON BEHALF OF OREGON STATE UNIVERSITY
Address of Applicant :312 Kerr Administration Building Corvallis OR 97331 2140 U.S.A.
(72)**Name of Inventor :**
1)LI Kaichang
2)LI Anlong

(57) Abstract :
A pressure sensitive adhesive construct comprising: (a) a backing substrate; and (b) a pressure sensitive adhesive composition disposed on the backing substrate wherein the pressure sensitive adhesive includes a product made from at least one epoxidized vegetable oil and at least one dibasic acid or anhydride or a combination of a dibasic acid or anhydride and a monobasic acid or anhydride.

No. of Pages : 48 No. of Claims : 31

(12) PATENT APPLICATION PUBLICATION
(19) INDIA
(22) Date of filing of Application :22/11/2012
(21) Application No.10161/DELNP/2012 A
(43) Publication Date : 05/09/2014

(54) Title of the invention : VARIATOR PRESSURE SET TORQUE CONTROL

(51) International classification :F16H61/14,F16H61/06,F16H61/00
(31) Priority Document No :12/790,528
(32) Priority Date :28/05/2010
(33) Name of priority country :U.S.A.
(86) International Application No :PCT/US2011/037841
Filing Date :25/05/2011
(87) International Publication No :WO 2011/150011
(61) Patent of Addition to Application Number :NA
Filing Date :NA
(62) Divisional to Application Number :NA
Filing Date :NA

(71)**Name of Applicant :**
1)CATERPILLAR INC.
Address of Applicant :100 N.E. Adams Street Peoria IL 61629 9510 U.S.A.
(72)**Name of Inventor :**
1)DEMARCO Frank A.
2)CRONIN Michael G.

(57) Abstract :
A method and system for configuring a hydromechanical transmission having a hydraulic pump and a hydraulic motor driven by the hydraulic pump and a pressure driven actuator employs a particular torque pressure curve configuration to maximize torque resolution with respect to actuator pressure changes while ensuring that the curve is substantially monotonic in each dimension and at any available motor speed within a predetermined motor speed limit and any available actuator pressure within predetermined actuator pressure limits. The resultant four dimensional association between actuator pressure motor speed primary power source speed and motor torque allows selection of an actuator pressure to provide a desired torque.

No. of Pages : 22 No. of Claims : 10

(12) PATENT APPLICATION PUBLICATION
(19) INDIA
(22) Date of filing of Application :22/11/2012
(21) Application No.10162/DELNP/2012 A
(43) Publication Date : 05/09/2014

(54) Title of the invention : METHOD AND APPARATUS FOR THE PURIFICATION OF CARBON DIOXIDE USING LIQUID CARBON DIOXIDE

(51) International classification	:B01D53/00,B01D53/14,B01D3/14
(31) Priority Document No	:NA
(32) Priority Date	:NA
(33) Name of priority country	:NA
(86) International Application No	:PCT/DK2010/050146
Filing Date	:17/06/2010
(87) International Publication No	:WO 2011/157268
(61) Patent of Addition to Application Number	:NA
Filing Date	:NA
(62) Divisional to Application Number	:NA
Filing Date	:NA

(71)**Name of Applicant :**
1)UNION ENGINEERING A/S
Address of Applicant :Snaremosevej 27 DK 7000 Fredericia Denmark
(72)**Name of Inventor :**
1)FIND Rasmus

(57) Abstract :
The present invention relates to an improved method for removing contaminants from a gaseous or liquid stream substantially comprising carbon dioxide. More specifically the method comprises the step of subjecting the gaseous or liquid stream to an absorption step in which the absorbent is liquid carbon dioxide or a rectification step wherein the waste of carbon dioxide is minimized by utilizing a compressing means for generating a pressure difference between two streams in a reboiler.

No. of Pages : 37 No. of Claims : 24

(12) PATENT APPLICATION PUBLICATION
(19) INDIA
(22) Date of filing of Application :22/11/2012
(21) Application No.10163/DELNP/2012 A
(43) Publication Date : 05/09/2014

(54) Title of the invention : PROCESS FOR OXIDIZING ALKYL AROMATIC COMPOUNDS

(51) International classification :C07C51/21,C07C63/26,C07C63/00
(31) Priority Document No :61/360,153
(32) Priority Date :30/06/2010
(33) Name of priority country :U.S.A.
(86) International Application No :PCT/US2011/040502
Filing Date :15/06/2011
(87) International Publication No :WO 2012/012045
(61) Patent of Addition to Application Number :NA
Filing Date :NA
(62) Divisional to Application Number :NA
Filing Date :NA

(71)**Name of Applicant :**
1)UOP LLC
Address of Applicant :25 East Algonquin Road P. O. Box 5017 Des Plaines Illinois 60017 5017 U.S.A.
2)BORESKOV INSTITUTE OF CATALYSIS
(72)**Name of Inventor :**
1)BHATTACHARYYA Alakananda
2)KOCAL Joseph A.
3)WALENGA Joel T.
4)ADONIN Nikolay Y.
5)KUZNETSOVA Nina I.
6)BALZHINIMAEV Bair S.

(57) Abstract :
A process and a mixture for oxidizing an alkyl aromatic compound comprises forming a mixture comprising the alkyl aromatic compound a solvent a bromine source and a catalyst; and contacting the mixture with an oxidizing agent at oxidizing conditions to produce an oxidation product comprising at least one of an aromatic aldehyde an aromatic alcohol an aromatic ketone and an aromatic carboxylic acid. The solvent comprises a carboxylic acid having from 1 to 7 carbon atoms and an ionic liquid selected from the group consisting of an imidazolium ionic liquid a pyridinium ionic liquid a phosphonium ionic liquid a tetra alkyl ammonium ionic liquid and combinations thereof. The catalyst comprises at least one of
cobalt titanium manganese chromium copper nickel vanadium iron molybdenum tin cerium and zirconium.

No. of Pages : 19 No. of Claims : 10

(12) PATENT APPLICATION PUBLICATION
(19) INDIA
(22) Date of filing of Application :22/11/2012
(21) Application No.10164/DELNP/2012 A
(43) Publication Date : 05/09/2014

(54) Title of the invention : USE OF DIATOMACEOUS EARTH IN THE PHARMACEUTICAL INDUSTRY

(51) International classification :A61K9/20,A61K47/02
(31) Priority Document No :P1000278
(32) Priority Date :28/05/2010
(33) Name of priority country :Hungary
(86) International Application No :PCT/HU2011/000049
Filing Date :27/05/2011
(87) International Publication No :WO 2011/148209
(61) Patent of Addition to Application Number :NA
Filing Date :NA
(62) Divisional to Application Number :NA
Filing Date :NA

(71)**Name of Applicant :**
1)EGIS GYGYSZERGY R NYILV NOSAN MUK–DO R‰SZV‰NYT RSAS G
Address of Applicant :Kereszt°ri °t 30 38 H 1106 Budapest Hungary
2)ONP HOLDING SE
(72)**Name of Inventor :**
1)MIKUL SIK Endre
2)ALBRECHT Ott³

(57) Abstract :
The present invention is related to solid pharmaceutical preparations containing diatomaceous earth (diatomite) or a natural mineral mixture containing diatomaceous earth as filler besides the active ingredient and optional other auxiliary agents. A further object of the invention is a method for manufacturing such pharmaceutical preparations.

No. of Pages : 47 No. of Claims : 13

(12) PATENT APPLICATION PUBLICATION
(19) INDIA
(22) Date of filing of Application :23/11/2012
(21) Application No.10195/DELNP/2012 A
(43) Publication Date : 05/09/2014

(54) Title of the invention : HOLLOW PANEL AND MOULD FOR THE MANUFACTURE THEREOF

(51) International classification :B29C33/42,B32B3/26,B32B21/13
(31) Priority Document No :P201001377
(32) Priority Date :22/10/2010
(33) Name of priority country :Spain
(86) International Application No :PCT/ES2011/000285
Filing Date :19/09/2011
(87) International Publication No :WO 2012/052576
(61) Patent of Addition to Application Number :NA
Filing Date :NA
(62) Divisional to Application Number :NA
Filing Date :NA

(71)**Name of Applicant :**
1)ALMAS DE PUERTA S.L.
Address of Applicant :C/ Fernando Macias 10 2° B E 15004 A Coru±a Spain
(72)**Name of Inventor :**
1)LPEZ S NCHEZ Manuel

(57) Abstract :
The hollow panel (1) includes a hollow central board or body (2) and two external sheets (3) forming a sandwich. The central body (2) is made of wood fibre and glues and made in the mould, said mould having an uneven surface with oblique 5 walls (4) and truncated vertices. Next, the external sheets (3), made from the same material as the central body (2), are joined using the same glues. The mould has a fixed peripheral frame (19), a thrust platform (30) and a heating plate (20) with a serrated plate (6) to which another, similar plate (7) is brought close - the two serrated plates constituting the mould - the latter plate being rigidly secured to the 10 upper hot plate (12) of the press for forming the central board or body (2). The teeth of the two plates are offset in a staggered pattern, and do not meet, to form the uneven surface with the desired thickness (2).

No. of Pages : 24 No. of Claims : 6

(12) PATENT APPLICATION PUBLICATION
(19) INDIA
(22) Date of filing of Application :23/11/2012
(21) Application No.10196/DELNP/2012 A
(43) Publication Date : 05/09/2014

(54) Title of the invention : LOCALIZED DATA AFFINITY SYSTEM AND HYBRID METHOD

(51) International classification :G05B19/18
(31) Priority Document No :61/395704
(32) Priority Date :17/05/2010
(33) Name of priority country :U.S.A.
(86) International Application No :PCT/US2011/036683
Filing Date :16/05/2011
(87) International Publication No :WO 2011/146409
(61) Patent of Addition to Application Number :NA
Filing Date :NA
(62) Divisional to Application Number :NA
Filing Date :NA

(71)**Name of Applicant :**
1)UNITED STATES POSTAL SERVICE
Address of Applicant :475 LEnfant Plaza #6443 Washington DC 20260 U.S.A.
(72)**Name of Inventor :**
1)ATKINS C. Scot
2)CONWAY Joseph

(57) Abstract :
A method system and computer program for processing records is disclosed. The records are associated with record sets. Record sets are associated with processor sets which include one or more processors. Records are routed to associated processor sets for processing based on the record set associated with the record. Records are processed on processors in the processor sets. Furthermore various localized affinities can be established. Process affinity can link server processes with processor sets. Cache affinity can link database caches with processor sets. Data affinity can link incoming data to processor sets.

No. of Pages : 30 No. of Claims : 27

(12) PATENT APPLICATION PUBLICATION
(19) INDIA
(22) Date of filing of Application :23/11/2012
(21) Application No.10197/DELNP/2012 A
(43) Publication Date : 05/09/2014

(54) Title of the invention : METHOD FOR CONVERTING CARBON AND HYDOCARBON CRACKING AND APPARATUS FOR HYDROCARBON CRACKING

(51) International classification :C10G75/00,C01B31/18,C01B31/20
(31) Priority Document No :201010212803.5
(32) Priority Date :28/06/2010
(33) Name of priority country :China
(86) International Application No :PCT/US2011/037288
Filing Date :20/05/2011
(87) International Publication No :WO 2012/003055
(61) Patent of Addition to Application Number :NA
Filing Date :NA
(62) Divisional to Application Number :NA
Filing Date :NA

(71)**Name of Applicant :**
1)GENERAL ELECTRIC COMPANY
Address of Applicant :1 River Road Schenectday NY 12345 U.S.A.
(72)**Name of Inventor :**
1)DENG Zhigang
2)PENG Wenqing
3)LIN Chuan
4)WANG Shizhong
5)FU Qijia
6)GU Yanfei
7)WU Zhaoping
8)LIANG Yangang
9)SHE Minggang

(57) Abstract :
A method for converting carbon into a carbon oxide comprises: contacting carbon with steam in presence of a carnegieite like material of formula (NaO)Na[AlSiO] wherein 0<x=l. Method and apparatus for hydrocarbon cracking are also described herein.

No. of Pages : 17 No. of Claims : 20

(12) PATENT APPLICATION PUBLICATION
(19) INDIA
(22) Date of filing of Application :23/11/2012
(21) Application No.10198/DELNP/2012 A
(43) Publication Date : 05/09/2014

(54) Title of the invention : METHOD FOR SELECTIVELY DISTRIBUTING INFORMATION IN A COMPUTER OR COMMUNICATION NETWORK AND PHYSICAL ENTITIES THEREFOR

(51) International classification :G06Q30/00
(31) Priority Document No :NA
(32) Priority Date :NA
(33) Name of priority country :NA
(86) International Application No :PCT/EP2010/059264
Filing Date :30/06/2010
(87) International Publication No :WO 2012/000543
(61) Patent of Addition to Application Number :NA
Filing Date :NA
(62) Divisional to Application Number :NA
Filing Date :NA

(71)**Name of Applicant :**
1)TELEFONAKTIEBOLAGET LM ERICSSON (publ)
Address of Applicant :S 164 83 Stockholm Sweden
2)UNIVERSIDAD POLIT‰CNICA DE MADRID
(72)**Name of Inventor :**
1)MONJAS LLORENTE Miguel Angel
2)DEL LAMO RAMIRO Jos Mara
3)SAN MIGUEL GONZ LEZ Beatrz
4)TRAPERO BURGOS Rubn
5)YELMO GARC A Juan Carlos

(57) Abstract :
A method is carried out by a controller (100) a social network (200) a provider (300) and a terminal (400) of a primary user (450). After a trust relationship is set up (s10) between the controller (300) and social network (200) the terminal (400) accesses (s20) the provider (300). The provider (300) transmits (s30) to the terminal (400) a proposal to provide information relating to the provider (300) to secondary users of the primary user in the social network (200). If the terminal (400) accepts (s40) the proposal the provider (300) transmits (s30) to the controller (100) a message including the information relating to the provider (300). The controller (300) obtains identification of the primary user (450) to whom the message relates and triggers (s70) transmission to the secondary users of the information relating to the provider (300). A controller (100) a system (500) and computer programs are also disclosed.

No. of Pages : 72 No. of Claims : 20

(12) PATENT APPLICATION PUBLICATION
(21) Application No.10199/DELNP/2012 A
(19) INDIA
(22) Date of filing of Application :23/11/2012
(43) Publication Date : 05/09/2014

(54) Title of the invention : TREATMENT ADDITIVES METHODS FOR MAKING AND METHODS FOR CLARIFYING AQUEOUS MEDIA

(51) International classification :C08B37/00,C02F1/00
(31) Priority Document No :12/795174
(32) Priority Date :07/06/2010
(33) Name of priority country :U.S.A.
(86) International Application No :PCT/US2011/037109
Filing Date :19/05/2011
(87) International Publication No :WO 2011/156097
(61) Patent of Addition to Application Number :NA
Filing Date :NA
(62) Divisional to Application Number :NA
Filing Date :NA

(71)**Name of Applicant :**
1)GENERAL ELECTRIC COMPANY
Address of Applicant :1 River Road Schenectady NY 12345 U.S.A.
(72)**Name of Inventor :**
1)SURESH Seethalakshmi
2)VASCONCELLOS Stephen Robert
3)MADHAVAN Narain
4)KAWAWA Baraka

(57) Abstract :
A coagulant composition includes chitosan methacryloyloxyethyltrimethyl ammonium methyl sulfate and a redox initiator. A coagulant method for making the coagulant and clarifying wastewater is also provided.

No. of Pages : 24 No. of Claims : 30

(12) PATENT APPLICATION PUBLICATION
(21) Application No.10201/DELNP/2012 A
(19) INDIA
(22) Date of filing of Application :23/11/2012
(43) Publication Date : 05/09/2014

(54) Title of the invention : BALL CHAIN MANUFACTURING METHOD AND BALL CHAIN CONNECTING MEMBER

(51) International classification :F16G13/12,E06B9/326
(31) Priority Document No :2010105932
(32) Priority Date :30/04/2010
(33) Name of priority country :Japan
(86) International Application No :PCT/JP2011/060226
Filing Date :27/04/2011
(87) International Publication No :WO 2011/136254
(61) Patent of Addition to Application Number :NA
Filing Date :NA
(62) Divisional to Application Number :NA
Filing Date :NA

(71)**Name of Applicant :**
1)TACHIKAWA CORPORATION
Address of Applicant :3 1 12 Mita Minato ku Tokyo 1088334 Japan
(72)**Name of Inventor :**
1)KAWAI Eiji
2)NAKAMURA Hajime

(57) Abstract :
Provided is a method for manufacturing a ball chain by which ball chains of various circumferential lengths can easily be manufactured. The present invention provides a method for manufacturing a ball chain. The method includes the steps of: forming a first ball chain portion having a hemispheroids at an end thereof, forming either a second ball chain portion having a hemispheroids at an end thereof, or forming a coupling member including a portion that can be coupled and divided and having a hemispheroids at an end thereof; and joining either respective ends of the first and second ball chain portions or respective ends of the first ball chain portion and the coupling member.

No. of Pages : 109 No. of Claims : 17

(12) PATENT APPLICATION PUBLICATION
(21) Application No.10202/DELNP/2012 A
(19) INDIA
(22) Date of filing of Application :23/11/2012
(43) Publication Date : 05/09/2014

(54) Title of the invention : ELECTRIC DRIVE DEVICE FOR MOTOR VEHICLE

(51) International classification :H02K5/04,B60K6/26
(31) Priority Document No :1050807-5
(32) Priority Date :16/07/2010
(33) Name of priority country :Sweden
(86) International Application No :PCT/SE2011/050947
Filing Date :12/07/2011
(87) International Publication No :WO 2012/008911
(61) Patent of Addition to Application Number :NA
Filing Date :NA
(62) Divisional to Application Number :NA
Filing Date :NA

(71)**Name of Applicant :**
1)BAE SYSTEMS H„GGLUNDS AKTIEBOLAG
Address of Applicant :S 891 82 –rnskldsvik Sweden
(72)**Name of Inventor :**
1)KARLSSON Pontus
2)PRINSBACK Oskar

(57) Abstract :
The invention relates to an electric drive device (10; 110; 210; 310; 410) comprising an electric motor (20) with a stator (24) and a rotor (22) arranged to rotate a drive shaft (26) a housing (30; 130; 230; 330; 430) in which the electric motor (20) is housed which housing has an essentially ring shaped cross section with an imaginary centre axle (X) wherein the electric motor (20) is eccentrically arranged in the housing (30; 130; 230; 330; 430) in such a way that the rotational centre of the drive shaft (26) of the electric motor (20) runs essentially parallel to and at a distance from the centre axle of the housing (30; 130; 230; 330; 430) so as to form a desired space (36) between the electric motor and said housing. The invention also relates to motor vehicle with an electric drive device.

No. of Pages : 20 No. of Claims : 13

(12) PATENT APPLICATION PUBLICATION
(21) Application No.10203/DELNP/2012 A
(19) INDIA
(22) Date of filing of Application :23/11/2012
(43) Publication Date : 05/09/2014

(54) Title of the invention : THERMOELECTRIC/SOLAR CELL HYBRID COUPLED VIA VACUUM INSULATED GLAZING UNIT AND METHOD OF MAKING THE SAME

(51) International classification :H01L31/058
(31) Priority Document No :12/801,257
(32) Priority Date :28/05/2010
(33) Name of priority country :U.S.A.
(86) International Application No :PCT/US2011/000871
Filing Date :17/05/2011
(87) International Publication No :WO 2011/149509
(61) Patent of Addition to Application Number :NA
Filing Date :NA
(62) Divisional to Application Number :NA
Filing Date :NA

(71)**Name of Applicant :**
1)GUARDIAN INDUSTRIES CORP.
Address of Applicant :2300 Harmon Road Auburn Hills MI 48326 1716 U.S.A.
(72)**Name of Inventor :**
1)VEERASAMY Vijayen S.

(57) Abstract :
Certain example embodiments provide techniques for improving the output of hybrid systems comprising photovoltaic (PV) and thermoelectric (TE) modules in conjunction with super insulating yet optically transmissive vacuum insulated glass (V1G) unit technologies. More particularly certain example embodiments relate to hybrid systems including hydrogenated microcrystalline silicon (mc Si) hydrogenated amorphous silicon (a Si) bulk hetero junction solar cell and/or the like that may be used together with a TE generator that achieves high operational PV and TE efficiencies under ambient conditions. In that regard certain example embodiments effectively partition the solar spectrum in order to yield an increased conversion efficiency of a PV TE hybrid system with a solar cell operating at ambient temperature.

No. of Pages : 29 No. of Claims : 20

(12) PATENT APPLICATION PUBLICATION
(21) Application No.10204/DELNP/2012 A
(19) INDIA
(22) Date of filing of Application :23/11/2012
(43) Publication Date : 05/09/2014

(54) Title of the invention : METHOD AND DEVICE FOR MANUFACTURING VITREOUS

(51) International classification :C21B3/08,C04B5/00
(31) Priority Document No :91 692
(32) Priority Date :26/05/2010
(33) Name of priority country :Luxembourg
(86) International Application No :PCT/EP2011/058581
Filing Date :25/05/2011
(87) International Publication No :WO 2011/147883
(61) Patent of Addition to Application Number :NA
Filing Date :NA
(62) Divisional to Application Number :NA
Filing Date :NA

(71)**Name of Applicant :**
1)PAUL WURTH S.A.
Address of Applicant :32 rue dAlsace L 1122 Luxembourg
(72)**Name of Inventor :**
1)FRIEDEN Romain
2)EBNER Bill
3)SCHORR Tom
4)DUNCAN Scott
5)PAUL George
6)KAPPES Horst

(57) Abstract :
A process for manufacturing a vitreous slag comprises the steps of: rotating a cone about a vertical cone axis the cone comprising an external shell having a lateral surface; cooling the lateral surface of the external shell; pouring molten slag onto the lateral surface of the cone to form a film of slag by gravity which is solidified as it is entrained in rotation by the cone about the cone axis; and detaching pieces of the film from the lateral surface and removing solidified slag in the form of the pieces after the film has been entrained through between 0.6 and 0.9 revolutions of the cone the molten slag being poured onto the lateral surface in a pouring zone and spreads to form a film over substantially the entire length of the lateral surface preferably over between 75% and 95% of the length of the lateral surface.

No. of Pages : 24 No. of Claims : 14

(12) PATENT APPLICATION PUBLICATION
(19) INDIA
(22) Date of filing of Application :19/11/2012
(21) Application No.10000/DELNP/2012 A
(43) Publication Date : 05/09/2014

(54) Title of the invention : SUPPORT CAPSULE SYSTEM AND METHOD FOR PREPARING A BEVERAGE BY CENTRIFUGATION

(51) International classification :B65D85/804,A47J31/22
(31) Priority Document No :10162741.2
(32) Priority Date :12/05/2010
(33) Name of priority country :EPO
(86) International Application No :PCT/EP2011/057670
Filing Date :12/05/2011
(87) International Publication No :WO 2011/141535
(61) Patent of Addition to Application Number :NA
Filing Date :NA
(62) Divisional to Application Number :NA
Filing Date :NA

(71)**Name of Applicant :**
1)NESTEC S.A.
Address of Applicant :Av. Nestl 55 CH 1800 Vevey Switzerland
(72)**Name of Inventor :**
1)JARISCH Christian
2)PERENTES Alexandre
3)KAESER Stefan
4)MAGRI Carlo
5)GERBAULET Arnaud
6)KAESER Thomas
7)ABEGGLEN Daniel

(57) Abstract :
Support (20) adapted to be associated with or part of a capsule (7) for the preparation of a beverage comprising a section on which at least one sequence of symbols (24) is represented so as that each symbol is sequentially readable by a reading arrangement of an external device while the capsule is driven in rotation along an axis of rotation each sequence coding a set of information related to the capsule.

No. of Pages : 26 No. of Claims : 24

(12) PATENT APPLICATION PUBLICATION
(19) INDIA
(22) Date of filing of Application :19/11/2012
(21) Application No.10004/DELNP/2012 A
(43) Publication Date : 05/09/2014

(54) Title of the invention : METHOD FOR PREPARING ALKALINE HYDROLYSATES OF PLANT PROTEINS

(51) International classification :A23J3/14,A23J3/32,A23L1/035
(31) Priority Document No :1053944
(32) Priority Date :20/05/2010
(33) Name of priority country :France
(86) International Application No :PCT/FR2011/051093
Filing Date :16/05/2011
(87) International Publication No :WO 2011/144856
(61) Patent of Addition to Application Number :NA
Filing Date :NA
(62) Divisional to Application Number :NA
Filing Date :NA

(71)**Name of Applicant :**
1)ROQUETTE FRERES
Address of Applicant :F 62136 Lestrem France
(72)**Name of Inventor :**
1)DHALLEINE Claire
2)DELEPIERRE Sophie

(57) Abstract :
THE SUBJECT MATTER OF THE INVENTION IS A METHOD FOR PREPARING ALKALINE HYDROLYSATES OF PLANT PROTEINS, CHARACTERIZED IN THAT IT COMPRISES THE FOLLOWING STEPS: 1) PREPARING A SUSPENSION OF PROTEINS SELECTED FROM THE GROUP CONSISTING OF PEA PROTEINS, POTATO PROTEINS AND MAIZE PROTEINS, AT A DRY MATTER CONTENT OF BETWEEN 10 AND 15%; 2) ADJUSTING THE PH, WITH STIRRING, TO A VALUE BETWEEN 9.5 AND 10.5 USING, AS THE ONLY ALKALINE AGENT, ONE OR MORE ALKALI METAL HYDROXIDES SELECTED FROM THE GROUP CONSISTING OF SODIUM HYDROXIDE AND POTASSIUM HYDROXIDE; 3) HEATING THE RESULTING SUSPENSION AT A TEMPERATURE BETWEEN 70 AND 80°C, FOR 4 TO 6 HOURS; 4) NEUTRALIZING SAID HEATED SUSPENSION USING AN INORGANIC ACID, PREFERABLY HYDROCHLORIC ACID; 5) DRYING THE NEUTRALIZED SUSPENSION SO AS TO OBTAIN THE ALKALINE HYDROLYSATE.

No. of Pages : 32 No. of Claims : 6

(12) PATENT APPLICATION PUBLICATION
(21) Application No.10009/DELNP/2012 A
(19) INDIA
(22) Date of filing of Application :19/11/2012
(43) Publication Date : 05/09/2014

(54) Title of the invention : GENERATOR MOTOR COOLING STRUCTURE AND GENERATOR MOTOR

(51) International classification :H02K 5/20
(31) Priority Document No :2011-080713
(32) Priority Date :31/03/2011
(33) Name of priority country :Japan
(86) International Application No :PCT/JP2012/057770
Filing Date :26/03/2012
(87) International Publication No : NA
(61) Patent of Addition to Application Number :NA
Filing Date :NA
(62) Divisional to Application Number :NA
Filing Date :NA

(71)**Name of Applicant :**
1)KOMATSU LTD.
Address of Applicant :2-3-6 Akasaka Minato-ku Tokyo 107-8414 Japan
(72)**Name of Inventor :**
1)KOUICHI WATANABE
2)KOUYA IIZUKA
3)TAKAO NAGANO

(57) Abstract :
THE OBJECTIVE OF THE PRESENT INVENTION IS TO SUPPRESS UNEVENNESS IN COOLING STATE WHEN COOLING A GENERATOR MOTOR USING A COOLING MEDIUM. THUS, A GENERATOR MOTOR COOLING STRUCTURE (100) CONTAINS: A FIRST DUCT (32) THAT IS PROVIDED TO A FLANGE (12) OF THE GENERATOR MOTOR, EXTENDS TOWARDS THE ROTATIONAL CENTRAL AXIS (ZR) OF AN INPUT/OUTPUT SHAFT (16) HOUSED WITHIN A FIRST HOUSING (11), OPENS AT THE INPUT/OUTPUT SHAFT (16) SIDE, AND HAS A THROTTLE SECTION (35) PARTWAY ALONG THE DUCT; AND A SECOND DUCT (33) THAT IS PROVIDED TO THE FLANGE (12), EXTENDS TOWARDS A ROTOR (20) ATTACHED TO THE OUTSIDE OF THE INPUT/OUTPUT SHAFT (16) AFTER BRANCHING FROM THE FIRST DUCT (32) AT A POSITION TO THE OUTSIDE IN THE RADIAL DIRECTION OF THE INPUT/OUTPUT SHAFT (16) FROM THE THROTTLE SECTION (35), AND OPENS AT THE ROTOR (20) SIDE.

No. of Pages : 51 No. of Claims : 8

(12) PATENT APPLICATION PUBLICATION
(19) INDIA
(22) Date of filing of Application :23/11/2012
(21) Application No.10210/DELNP/2012 A
(43) Publication Date : 05/09/2014

(54) Title of the invention : OFFSET CAM FOR PISTON PUMP

(51) International classification :F04B9/04,F04B39/00,F04B17/00
(31) Priority Document No :61/346,280
(32) Priority Date :19/05/2010
(33) Name of priority country :U.S.A.
(86) International Application No :PCT/US2011/000894
Filing Date :19/05/2011
(87) International Publication No :WO 2011/146126
(61) Patent of Addition to Application Number :NA
Filing Date :NA
(62) Divisional to Application Number :NA
Filing Date :NA

(71)**Name of Applicant :**
1)GRACO MINNESOTA INC.
Address of Applicant :88 11th Avenue NE Minneapolis MN 55413 U.S.A.
(72)**Name of Inventor :**
1)CELOTTA Daniel
2)HOLMAN John C.

(57) Abstract :
A pump assembly comprises a cam and a piston. The cam rotates in a plane about an eccentric axis and has a circumferential side wall. The piston engages the circumferential side wall of the cam and runs along a piston axis which lies in the plane of the cam. The piston axis is parallel to but not coincident with a reference line perpendicular to and intersecting the eccentric axis.

No. of Pages : 16 No. of Claims : 16

(12) PATENT APPLICATION PUBLICATION
(19) INDIA
(22) Date of filing of Application :23/11/2012
(21) Application No.10213/DELNP/2012 A
(43) Publication Date : 05/09/2014

(54) Title of the invention : PHENOLIC COMPOSITIONS DERIVED FROM APPLE SKIN AND USES THEREOF

(51) International classification :A61K36/73,A61K31/216,A61K31/353
(31) Priority Document No :61/33,3091
(32) Priority Date :10/05/2010
(33) Name of priority country :U.S.A.
(86) International Application No :PCT/CA2011/050289
Filing Date :10/05/2011
(87) International Publication No :WO 2011/140655
(61) Patent of Addition to Application Number :NA
Filing Date :NA
(62) Divisional to Application Number :NA
Filing Date :NA

(71)**Name of Applicant :**
1)DALHOUSIE UNIVERSITY
Address of Applicant :6299 South Street Halifax Nova Scotia B3H 4H6 Canada
(72)**Name of Inventor :**
1)RUPASINGHE Handunkutti Pathirannehalage Vasantha
2)ROBERTSON George S.

(57) Abstract :
Described herein are phenolic compositions derived from apple skins. In particular described herein are flavonoid rich fractions derived from apple skin extract. The compositions are useful in the prevention and treatment of conditions associated with oxidative stress and/or inflammation including certain neurodegenerative diseases. Methods of producing the compositions are also described.

No. of Pages : 96 No. of Claims : 83

(12) PATENT APPLICATION PUBLICATION
(21) Application No.10220/DELNP/2012 A
(19) INDIA
(22) Date of filing of Application :23/11/2012
(43) Publication Date : 05/09/2014

(54) Title of the invention : THERMALLY CONDUCTIVE POLYMER COMPOSITION

(51) International classification :C08K3/00,C08K3/04,H01B3/00
(31) Priority Document No :10167465.3
(32) Priority Date :28/06/2010
(33) Name of priority country :EPO
(86) International Application No:PCT/EP2011/060714
Filing Date :27/06/2011
(87) International Publication No :WO 2012/000935
(61) Patent of Addition to Application Number :NA
Filing Date :NA
(62) Divisional to Application Number :NA
Filing Date :NA

(71)**Name of Applicant :**
1)DSM IP ASSETS B.V.
Address of Applicant :Het Overloon 1 NL 6411 TE Heerlen Netherlands
(72)**Name of Inventor :**
1)JANSSEN Robert Hendrik Catharina
2)DIJK VAN Hans Klaas
3)FEIJTS Pascal Jozef Maria
4)WENNEKES Johannes Albertus

(57) Abstract :
The invention relates to a thermally conductive polymer composition comprising an organic polymer being a thermoplastic polymer chosen from the group consisting of polyesters polyamides polyphenylene sulphides polyphenylene oxides polysulfones polyarylates polyetheretherketones and polyetherimides and mixtures and/or copolymers thereof 15 40 wt.% boron nitride and 0.01 10 wt.% carbon black.

No. of Pages : 19 No. of Claims : 10

(12) PATENT APPLICATION PUBLICATION
(19) INDIA
(22) Date of filing of Application :23/11/2012
(21) Application No.10221/DELNP/2012 A
(43) Publication Date : 05/09/2014

(54) Title of the invention : EXTERNALLY SPLINED FASTENER

(51) International classification :F16B19/10,F16B37/06
(31) Priority Document No :1012298.4
(32) Priority Date :22/07/2010
(33) Name of priority country :U.K.
(86) International Application No :PCT/GB2011/051107
Filing Date :14/06/2011
(87) International Publication No :WO 2012/010858
(61) Patent of Addition to Application Number :NA
Filing Date :NA
(62) Divisional to Application Number :NA
Filing Date :NA

(71)**Name of Applicant :**
1)AVDEL UK LIMITED
Address of Applicant :Pacific House 2 Swiftfields Watchmead Industrial Estate Welwyn Garden City Hertfordshire AL7 1LY U.K.
(72)**Name of Inventor :**
1)BREWER Jonathan

(57) Abstract :
A fastener (2) for securing a workpiece comprising a plurality of workpiece members said fastener comprising a shank (4) and a radially enlarged head (6) wherein the fastener further comprises axial voids (40) and splines (18) such that when the fastener is installed into a workpiece by a mandrel breakstem or pin the shank of the fastener is expanded such that the crests of the splines are caused to mechanically engage with the internal walls of the fastener apertures.

No. of Pages : 44 No. of Claims : 22

(12) PATENT APPLICATION PUBLICATION
(19) INDIA
(22) Date of filing of Application :23/11/2012
(21) Application No.10222/DELNP/2012 A
(43) Publication Date : 05/09/2014

(54) Title of the invention : A METHOD AND APPARATUS FOR MAKING LOW PHOSPHOROUS IRON

(51) International classification :C21B3/02,C21B11/08,C21B13/10
(31) Priority Document No :2010/02149
(32) Priority Date :26/04/2010
(33) Name of priority country :South Africa
(86) International Application No :PCT/IB2011/051672
Filing Date :18/04/2011
(87) International Publication No :WO 2011/135485
(61) Patent of Addition to Application Number :NA
Filing Date :NA
(62) Divisional to Application Number :NA
Filing Date :NA

(71)**Name of Applicant :**
1)FOURIE Louis Johannes
Address of Applicant :19 Monte Carlo Drive Highveld X7 0149 Centurion South Africa
(72)**Name of Inventor :**
1)FOURIE Louis Johannes

(57) Abstract :
A furnace (1) for producing low phosphorous iron is disclosed comprising a shell (2) lined with refractory material (3) a hearth (5) a floor a roof (22) side walls (8) tap holes feed ports (10) for raw material and an channel type induction heater (12) located in the floor and communicating with the hearth through a throat. The hearth (5) contains a liquid metal bath (6) at least partially heated by the induction heater (12). The raw material charge (11) covers at least 50 % of the bath (6).

No. of Pages : 14 No. of Claims : 7

(12) PATENT APPLICATION PUBLICATION
(19) INDIA
(22) Date of filing of Application :23/11/2012
(21) Application No.10223/DELNP/2012 A
(43) Publication Date : 05/09/2014

(54) Title of the invention : SOLID TEREPHTHALIC ACID COMPOSITION

(51) International classification :C07C63/26,C07C63/06,C07C51/21
(31) Priority Document No :61/360,247
(32) Priority Date :30/06/2010
(33) Name of priority country :U.S.A.
(86) International Application No :PCT/US2011/040602
Filing Date :16/06/2011
(87) International Publication No :WO 2012/012048
(61) Patent of Addition to Application Number :NA
Filing Date :NA
(62) Divisional to Application Number :NA
Filing Date :NA

(71)**Name of Applicant :**
1)UOP LLC
Address of Applicant :25 East Algonquin Road P. O. Box 5017 Des Plaines Illinois 60017 5017 U.S.A.
2)BORESKOV INSTITUTE OF CATALYSIS
(72)**Name of Inventor :**
1)BHATTACHARYYA Alakananda
2)KOCAL Joseph A.
3)WALENGA Joel T.
4)ADONIN Nikolay Y.
5)KUZNETSOVA Nina I.
6)BALZHINIMAEV Bair S.

(57) Abstract :
A solid terephthalic acid composition and a process for producing terephthalic acid from para xylene. The process comprises forming a mixture comprising the para xylene a solvent a bromine source and a catalyst; and oxidizing the para xylene by contacting the mixture with an oxidizing agent at oxidizing conditions to produce a solid oxidation product comprising terephthalic acid para toluic acid 4 carboxybenzaldehyde. The solvent comprises a carboxylic acid having from 1 to 7 carbon atoms and an dialkyl imidazolium ionic liquid; and the catalyst comprises at least one of
cobalt titanium manganese chromium copper nickel vanadium iron molybdenum tin cerium and zirconium. The solid terephthalic acid composition comprises less than about 4 000 ppm wt 4 carboxybenzaldehyde content and more than about 2 000 ppm wt a para toluic acid.

No. of Pages : 21 No. of Claims : 10

(12) PATENT APPLICATION PUBLICATION
(19) INDIA
(22) Date of filing of Application :23/11/2012
(21) Application No.10224/DELNP/2012 A
(43) Publication Date : 05/09/2014

(54) Title of the invention : MIXTURES USED IN OXIDIZING ALKYL AROMATIC COMPOUNDS

(51) International classification :C07C63/14,C07C51/21,C07C49/76
(31) Priority Document No :61/360180
(32) Priority Date :30/06/2010
(33) Name of priority country :U.S.A.
(86) International Application No :PCT/US2011/040515
Filing Date :15/06/2011
(87) International Publication No :WO 2012/012046
(61) Patent of Addition to Application Number :NA
Filing Date :NA
(62) Divisional to Application Number :NA
Filing Date :NA

(71)**Name of Applicant :**
1)UOP LLC
Address of Applicant :25 East Algonquin Road P.O. Box 5017 Des Plaines Illinois 60017 5017 U.S.A.
2)BORESKOV INSTITUTE OF CATALYSIS
(72)**Name of Inventor :**
1)BHATTACHARYYA Alakananda
2)KOCAL Joseph A.
3)WALENGA Joel T.
4)ADONIN Nikolay Y.
5)KUZNETSOVA Nina I.
6)BALZHINIMAEV Bair S.

(57) Abstract :
A process and a mixture for oxidizing an alkyl aromatic compound comprises forming a mixture comprising the alkyl aromatic compound a solvent a bromine source and a catalyst; and contacting the mixture with an oxidizing agent at oxidizing conditions to produce an oxidation product comprising at least one of an aromatic aldehyde an aromatic alcohol an aromatic ketone and an aromatic carboxylic acid. The solvent comprises a carboxylic acid having from 1 to 7 carbon atoms and an ionic liquid selected from the group consisting of an imidazolium ionic liquid a pyridinium ionic liquid a phosphonium ionic liquid a tetra alkyl ammonium ionic liquid and combinations thereof. The catalyst comprises at least one of
cobalt titanium manganese chromium copper nickel vanadium iron molybdenum tin cerium and zirconium.

No. of Pages : 19 No. of Claims : 10

(12) PATENT APPLICATION PUBLICATION
(19) INDIA
(22) Date of filing of Application :26/11/2012
(21) Application No.10251/DELNP/2012 A
(43) Publication Date : 05/09/2014

(54) Title of the invention : ANTI INFLAMMATORY AGENTS

(51) International classification :C07D211/56,C07D223/12,C07D401/12
(31) Priority Document No :1009603.0
(32) Priority Date :08/06/2010
(33) Name of priority country :U.K.
(86) International Application No :PCT/GB2011/000863
Filing Date :08/06/2011
(87) International Publication No :WO 2011/154696
(61) Patent of Addition to Application Number :NA
Filing Date :NA
(62) Divisional to Application Number :NA
Filing Date :NA

(71)**Name of Applicant :**
1)CAMBRIDGE ENTERPRISE LIMITED
Address of Applicant :The Old Schools Trinity Lane Cambridge CB2 1TN U.K.
2)BOEHRINGER INGELHEIM INTERNATIONAL GMBH
(72)**Name of Inventor :**
1)GRAINGER David John
2)FOX David John

(57) Abstract :
Disclosed herein are methods of preventing or treating inflammatory diseases using 3 aminolactam compounds each with aromatic tail groups. Compounds as defined by formulae (I) and (I) and the medical uses of the compounds are described herein.

No. of Pages : 69 No. of Claims : 20

(12) PATENT APPLICATION PUBLICATION
(19) INDIA
(22) Date of filing of Application :26/11/2012
(21) Application No.10252/DELNP/2012 A
(43) Publication Date : 05/09/2014

(54) Title of the invention : ANTI INFLAMMATORY AGENTS

(51) International classification :C07D211/76,C07D223/10,A61K31/45
(31) Priority Document No:1009603.0
(32) Priority Date :08/06/2010
(33) Name of priority country :U.K.
(86) International Application No :PCT/GB2011/000862
Filing Date :08/06/2011
(87) International Publication No :WO 2011/154695
(61) Patent of Addition to Application Number :NA
Filing Date :NA
(62) Divisional to Application Number :NA
Filing Date :NA

(71)**Name of Applicant :**
1)CAMBRIDGE ENTERPRISE LIMITED
Address of Applicant :The Old Schools Trinity Lane Cambridge CB2 1TN U.K.
2)BOEHRINGER INGELHEIM INTERNATIONAL GMBH
(72)**Name of Inventor :**
1)GRAINGER David John
2)FOX David John

(57) Abstract :
Disclosed herein are methods of preventing or treating inflammatory diseases using sulfonamide analogs of 3 aminolactam compounds each with aromatic tail groups. Compounds as defined by formulae (I) and (I) and the medical uses of the compounds are described herein.

No. of Pages : 53 No. of Claims : 20

(12) PATENT APPLICATION PUBLICATION
(19) INDIA
(22) Date of filing of Application :26/11/2012
(21) Application No.10253/DELNP/2012 A
(43) Publication Date : 05/09/2014

(54) Title of the invention : VEHICLE SEAT

(51) International classification :B60N2/16,A47C7/02,A61G3/00
(31) Priority Document No :2010223893
(32) Priority Date :01/10/2010
(33) Name of priority country :Japan
(86) International Application No :PCT/JP2011/055194
Filing Date :07/03/2011
(87) International Publication No :WO 2012/042923
(61) Patent of Addition to Application Number :NA
Filing Date :NA
(62) Divisional to Application Number :NA
Filing Date :NA

(71)**Name of Applicant :**
1)TOYOTA SHATAI KABUSHIKI KAISHA
Address of Applicant :100Kanayama Ichiriyama cho Kariya shi Aichi 4480002 Japan
(72)**Name of Inventor :**
1)KURETAKE Hiroyuki

(57) Abstract :
A vehicle seat (10) wherein when rotating both a forward link (41) and a rear link (51) rotating end side axis parts (45 55) of the forward link (41) and rear link (51) both move in an up down direction and a forward rear direction. The range of the rotating end side axis parts (45 55) of the forward link (41) and rear link (51) is set to a range spanning the positions of horizontal lines (M N) extending from fixed end side axis parts (43 53) of the forward link (41) and the rear link (51). Furthermore a rotation center joining line (L) is set in a rising forward diagonal direction extending forward and upward; therefore displacement of a seat cushion (11) in the forward rear direction is minimized and displacement of the seat cushion (11) in the height direction is increased making it possible to effectively lift the seat cushion (11) upward when a passenger gets in or out of the vehicle.

No. of Pages : 24 No. of Claims : 3

(12) PATENT APPLICATION PUBLICATION
(19) INDIA
(22) Date of filing of Application :26/11/2012
(21) Application No.10254/DELNP/2012 A
(43) Publication Date : 05/09/2014

(54) Title of the invention : TRANSDERMAL DEVICE

(51) International classification :A61B5/1477,A61B5/145,A61B10/00
(31) Priority Document No :1008448.1
(32) Priority Date :20/05/2010
(33) Name of priority country :U.K.
(86) International Application No :PCT/GB2011/000762
Filing Date :19/05/2011
(87) International Publication No :WO 2011/144900
(61) Patent of Addition to Application Number :NA
Filing Date :NA
(62) Divisional to Application Number :NA
Filing Date :NA

(71)**Name of Applicant :**
1)UNIVERSITY OF STRATHCLYDE
Address of Applicant :McCance Building 16 Richmond Street Glasgow G1 1XQ U.K.
(72)**Name of Inventor :**
1)CONNOLLY Patricia

(57) Abstract :
A transdermal device (10) for sensing one or more analytes in a biological fluid the device (10) comprising a liquid or gel layer (14); a sensor (18) located in the liquid or gel layer (14) for sensing analyte in the gel layer and an outer layer (16) that is adapted to bind with or trap the one or more analytes of interest wherein the device (10) is arranged so that in use the analyte is continuously drawn out of the liquid or gel (14) and into the outer layer (16) and the analyte concentration as a function of position across the gel/liquid has a defined profile.

No. of Pages : 21 No. of Claims : 32

(12) PATENT APPLICATION PUBLICATION
(19) INDIA
(22) Date of filing of Application :26/11/2012
(21) Application No.10255/DELNP/2012 A
(43) Publication Date : 05/09/2014

(54) Title of the invention : TELEPHONE CONTROL METHOD THEREFOR PROVISIONING SERVER AND CONTROL METHOD THEREFOR

(51) International classification :H04W4/16,H04W8/24,H04W92/08
(31) Priority Document No :NA
(32) Priority Date :NA
(33) Name of priority country :NA
(86) International Application No :PCT/JP2010/063590
Filing Date :04/08/2010
(87) International Publication No :WO 2012/017562
(61) Patent of Addition to Application Number :NA
Filing Date :NA
(62) Divisional to Application Number :NA
Filing Date :NA

(71)**Name of Applicant :**
1)Telefonaktiebolaget L M Ericsson (publ)
Address of Applicant :SE 164 83 Stockholm Sweden
(72)**Name of Inventor :**
1)MURAKAMI Shingo
2)ODA Toshikane
3)SUGIMOTO Shinta

(57) Abstract :
There is provided a telephone that is capable of accessing a memory for storing subscription information that includes a phone number. The telephone comprises among other things: a searching unit that searches the memory for second subscription information that is different from the first subscription information selected by the selecting unit; an obtaining unit that obtains a first phone number included in the first subscription information and transfer source information that enables a call transfer server of a network operator associated with the second subscription information to identify a second phone number included in the second subscription information; and a sending unit that sends to the call transfer server a call transfer request for requesting the network operator to transfer a call addressed to a phone number which is identified by the call transfer server based on the transfer source information to the first phone number.

No. of Pages : 48 No. of Claims : 11

(12) PATENT APPLICATION PUBLICATION
(21) Application No.10079/DELNP/2012 A
(19) INDIA
(22) Date of filing of Application :20/11/2012
(43) Publication Date : 05/09/2014

(54) Title of the invention : STERILIZABLE BIOPHARMACEUTICAL PACKAGING

(51) International classification :A61L2/26,A61L2/20
(31) Priority Document No :1052970
(32) Priority Date :20/04/2010
(33) Name of priority country :France
(86) International Application No :PCT/FR2011/050291
Filing Date :11/02/2011
(87) International Publication No :WO 2011/131870
(61) Patent of Addition to Application Number :NA
Filing Date :NA
(62) Divisional to Application Number :NA
Filing Date :NA

(71)**Name of Applicant :**
1)SARTORIUS STEDIM BIOTECH S.A.
Address of Applicant :Z.I. des Paluds Avenue de Jouques F 13781 Aubagne France
(72)**Name of Inventor :**
1)GAY Isabelle
2)NODIN Ga«lle
3)MENDYK Nicolas
4)ARMAU Stphanie

(57) Abstract :
The invention relates to a sterilizable biopharmaceutical packaging (1) capable of containing biopharmaceutical contents to be sterilized. Specifically, the packaging according to the invention comprises an opening (6) for inserting the biopharmaceutical contents to be sterilized, said opening being separate from tHe sterilization gas conveyance channel (7) so that the opening (6) for inserting the biopharmaceutical contents to be sterilized can be closed independently and before closing the sterilization gas conveyance channel (7). Additionally, the opening (6) for inserting the biopharmaceutical contents to be sterilized is di!ectly adjacent to the inner space (2) for receiving the biopharmaceutical contents to be sterilized and the sterilized biopharmaceutical contents so that the biopharmaceutical contents to be sterilized are inserted directly into the inner space (2) from outside the packaging (1). The means (12) for controlling the distribution of the sterilization gas is a means (12) for opening/closing the sterilization gas conveyance channel (7) so that the sterilization gas conveyance channel (7) can be opened or closed independently of the opening or closing of the insertion opening (6). Once the sterilization is performed, the outer wall (3), the sterilization gas conveyance channel (7), and the opening/closing means (12) are capable ofremaining rigidly connected therebetween so as to form a sterilized biopharmaceutical packaging (1) that contains the sterilized biopharmaceutical contents and dm be subjected to one or more integrity tests at any desired time after the sterilization

No. of Pages : 42 No. of Claims : 22

(12) PATENT APPLICATION PUBLICATION
(19) INDIA
(22) Date of filing of Application :26/11/2012
(21) Application No.10266/DELNP/2012 A
(43) Publication Date : 05/09/2014

(54) Title of the invention : HALOGEN FREE FLAME RETARDANT POLYOLEFIN

(51) International classification :C09K21/14,C08L23/00,C08K3/34
(31) Priority Document No :12/789801
(32) Priority Date :28/05/2010
(33) Name of priority country :U.S.A.
(86) International Application No :PCT/US2011/031248
Filing Date :05/04/2011
(87) International Publication No :WO 2011/149591
(61) Patent of Addition to Application Number :NA
Filing Date :NA
(62) Divisional to Application Number :NA
Filing Date :NA

(71)**Name of Applicant :**
1)GENERAL CABLE TECHNOLOGIES CORPORATION
Address of Applicant :4 Tesseneer Drive Highland Heights Kentucky 41076 U.S.A.
(72)**Name of Inventor :**
1)HILLS Charles W.

(57) Abstract :
The present invention relates to halogen free compositions containing an additive of bohmite nanoclay microcrystalline talc zinc hydroxystannate and a polyolefin oil. The composition is useful as a covering material (e.g. insulation or jacket) for electrical cables with excellent flame resistance and mechanical properties such as cold bend and thermomechanical properties.

No. of Pages : 16 No. of Claims : 20

(12) PATENT APPLICATION PUBLICATION
(21) Application No.10267/DELNP/2012 A
(19) INDIA
(22) Date of filing of Application :26/11/2012
(43) Publication Date : 05/09/2014

(54) Title of the invention : DEVICE FOR PRODUCING IMAGES OF IRISES OF THE EYES

(51) International classification :G06K9/78,A61B5/117
(31) Priority Document No :2010116537
(32) Priority Date :27/04/2010
(33) Name of priority country :Russia
(86) International Application No :PCT/RU2010/000638
Filing Date :29/10/2010
(87) International Publication No :WO 2011/136686
(61) Patent of Addition to Application Number :NA
Filing Date :NA
(62) Divisional to Application Number :NA
Filing Date :NA

(71)**Name of Applicant :**
1)ANTONOV Dmitry Evgenievich
Address of Applicant :ul. Raskovoi 25 43 Moscow 125040 Russia
(72)**Name of Inventor :**
1)ANTONOV Dmitry Evgenievich

(57) Abstract :
The device relates to the technology of protecting different objects from access by unauthorized personnel by means of identification of an individual on the basis of an image of the iris of the eye of said individual and can be used in the diagnosis of the state of organs and functional systems in an organism on the basis of the iris of the eye. The device for producing images of irises of the human eyes is directed to simplifying the design, the use conditions and the possibility for simultaneous production of a plurality of sets of characteristic features, i.e. a plurality of codes, which makes it possible to increase the accuracy and speed of identification of an individual. Said result is achieved in that the device for producing images of irises of the human eye comprises a means (l) for illuminating the iris of the eye in one or more spectral ranges which are close to the visible range, a means (2) for recording the signal reflected from the eyes and a means (4) for processing the images produced, said means comprising a unit (5) for detecting the centres of the pupils of the eyes on the image, a unit (6) for determining coordinates of the eyes relative to a set centre of the display and for constructing a straight reference line connecting the centres of the pupils, a unit (7) for processing the images of the iris of the eye in a normalized coordinate grid with segmentation and isolation of information fields, a unit (8) for generating codes, and a unit (9) for storing said codes.

No. of Pages : 10 No. of Claims : 1

(12) PATENT APPLICATION PUBLICATION
(19) INDIA
(22) Date of filing of Application :26/11/2012
(21) Application No.10261/DELNP/2012 A
(43) Publication Date : 05/09/2014

(54) Title of the invention : HOIST AND DRAG SYSTEM FOR MINING

(51) International classification :B66D1/22,B66C23/62,B66D1/14
(31) Priority Document No :12/793223
(32) Priority Date :03/06/2010
(33) Name of priority country :U.S.A.
(86) International Application No :PCT/US2011/037007
Filing Date :18/05/2011
(87) International Publication No :WO 2011/152992
(61) Patent of Addition to Application Number :NA
Filing Date :NA
(62) Divisional to Application Number :NA
Filing Date :NA

(71)**Name of Applicant :**
1)CATERPILLAR GLOBAL MINING LLC
Address of Applicant :6744 S. Howell Avenue Oak Creek WI 53154 U.S.A.
(72)**Name of Inventor :**
1)RIES William
2)FELD Gregory

(57) Abstract :
Equipment for mining and excavating includes a bucket used to remove overburden a boom for positioning the bucket and a hoist and drag cable for controlling the bucket. The equipment also includes a drum; a pedestal a pinion assembly and a cartridge assembly. The drum is used to wind the hoist cable or the drag cable. The pedestal supports the drum and surrounds a bull gear attached to the drum. A pinion of the pinion assembly extends within a port in the pedestal to engage the bull gear. The cartridge assembly is attached to the pedestal and includes an electric motor having a shaft extending from the motor and a gear reduction coupled to the motor shaft. The pinion assembly is driven by the motor via the gear reduction. The pedestal allows the pinion assembly and other components to be removed or installed without entirely separating the cartridge assembly from the pedestal

No. of Pages : 32 No. of Claims : 20

(12) PATENT APPLICATION PUBLICATION
(19) INDIA
(22) Date of filing of Application :26/11/2012
(21) Application No.10262/DELNP/2012 A
(43) Publication Date : 05/09/2014

(54) Title of the invention : APPLIANCE WITH A MOVEMENT SENSITIVE ICE AND WATER DISPENSING UNIT

(51) International classification :F25C5/00,F25D23/12
(31) Priority Document No :12/768211
(32) Priority Date :27/04/2010
(33) Name of priority country :U.S.A.
(86) International Application No :PCT/US2011/033557
Filing Date :22/04/2011
(87) International Publication No :WO 2011/139599
(61) Patent of Addition to Application Number :NA
Filing Date :NA
(62) Divisional to Application Number :NA
Filing Date :NA

(71)**Name of Applicant :**
1)ELECTROLUX HOME PRODUCTS INC.
Address of Applicant :10200 David Taylor Drive Charlotte North Carolina 28262 U.S.A.
(72)**Name of Inventor :**
1)FROEHLICH Kurt

(57) Abstract :
An appliance for dispensing product is provided including a storage compartment located within the appliance a dispensing unit located on the exterior of the appliance including a dispensing outlet and an actuating mechanism located on the exterior of the storage compartment. The actuating mechanism is configured to be moved from a neutral position to at least a first position and a second position. The first position is configured to trigger a release of a first type of product and the second position is configured to release a second type of product respectively from the dispensing outlet. In one example a switch can be provided to detect the position of the actuating mechanism and each position triggers the release of a different type of product from within the appliance.

No. of Pages : 23 No. of Claims : 20

(12) PATENT APPLICATION PUBLICATION
(19) INDIA
(22) Date of filing of Application :26/11/2012
(21) Application No.10263/DELNP/2012 A
(43) Publication Date : 05/09/2014

(54) Title of the invention : PAPER FOR AN ARTICLE TO BE SMOKED HAVING INCENDIARY POTENTIAL REDUCING PROPERTIES

(51) International classification :A24D1/02
(31) Priority Document No :1053934
(32) Priority Date :20/05/2010
(33) Name of priority country :France
(86) International Application No :PCT/EP2011/058160
Filing Date :19/05/2011
(87) International Publication No :WO 2011/144701
(61) Patent of Addition to Application Number :NA
Filing Date :NA
(62) Divisional to Application Number :NA
Filing Date :NA

(71)**Name of Applicant :**
1)PAPETERIES DU LEMAN
Address of Applicant :1080 rue des Vignes Rouges Amphion les Bains F 74500 Publier France
(72)**Name of Inventor :**
1)DUMAS Jocelyne
2)MALACHIE Jo«l
3)RUFFIN Arnaud
4)JEANROT Julie

(57) Abstract :
The invention concerns a paper for smoking article, in particular for a cigarette, comprising areas treated with a coating formulation adapted to reduce the ignition propensity of said treated areas which comprises nanoparticles of cellulose having a median dimension (d50) equal to or less than five micrometres.

No. of Pages : 32 No. of Claims : 17

(12) PATENT APPLICATION PUBLICATION
(19) INDIA
(22) Date of filing of Application :26/11/2012
(21) Application No.10264/DELNP/2012 A
(43) Publication Date : 05/09/2014

(54) Title of the invention : THICK SINGLE LENS EXTENDED DEPTH OF FIELD IMAGING SYSTEMS

(51) International classification :G02B13/20,G02B27/00,G02B13/00
(31) Priority Document No :12/799537
(32) Priority Date :27/04/2010
(33) Name of priority country:U.S.A.
(86) International Application No :PCT/EP2011/056463
Filing Date :21/04/2011
(87) International Publication No :WO 2011/134901
(61) Patent of Addition to Application Number :NA
Filing Date :NA
(62) Divisional to Application Number :NA
Filing Date :NA

(71)**Name of Applicant :**
1)FM ASSETS PTY LTD
Address of Applicant :c/o Gauld Tulloch Bove Pty Ltd Suite 301 Level 3 71 73 Archer Street Chatswood NSW 2067 Australia
(72)**Name of Inventor :**
1)MATHIEU Gilles

(57) Abstract :
An extended depth of field (EDOF) imaging system (10) is disclosed that has an optical system (20) consisting of a single lens element (22) having a focal length (F) a thickness (TH) between 0.25F and 1.2F and an objectwise aperture stop (AS). The optical system has a select amount of spherical aberration (SA) that allows for correcting coma by positioning the aperture stop. The optical system has an amount of field curvature (FC) such that 20 microns = FC = 300 microns which is made possible by the thickness of the single lens element. The imaging system has an image sensor (30) and an image processing unit (54) adapted to process raw images to form contrast enhanced images.

No. of Pages : 42 No. of Claims : 20

(12) PATENT APPLICATION PUBLICATION
(21) Application No.10265/DELNP/2012 A
(19) INDIA
(22) Date of filing of Application :26/11/2012
(43) Publication Date : 05/09/2014

(54) Title of the invention : HYBRID POWER PLANT FOR IMPROVED EFFICIENCY AND DYNAMIC PERFORMANCE

(51) International classification :H02J9/06
(31) Priority Document No :12/816576
(32) Priority Date :16/06/2010
(33) Name of priority country :U.S.A.
(86) International Application No :PCT/US2011/040120
Filing Date :13/06/2011
(87) International Publication No :WO 2011/159589
(61) Patent of Addition to Application Number :NA
Filing Date :NA
(62) Divisional to Application Number :NA
Filing Date :NA

(71)**Name of Applicant :**
1)TRANSOCEAN SEDCO FOREX VENTURES LIMITED
Address of Applicant :70 Harbour Drive 4th Floor George Town Grand Cayman Cayman Islands
(72)**Name of Inventor :**
1)BOURGEAU Edward Peter Kenneth

(57) Abstract :
A hybrid power plant is characterized by a substantially constant load on generators regardless of momentary swings in power load. Short changes in power load are accommodated by DC components such as capacitors batteries resistors or a combination thereof. Resistors are used to consume power when loads in the power plant are generating excess power. Capacitors are used to store and deliver power when the loads in the power plant demand additional power. Reducing rapid changes in power load as seen by the generators allows the generators to operate at higher efficiencies and with reduced emissions. Additionally power plants employing combinations of generators loads and energy storage devices have increased dynamic performance.

No. of Pages : 27 No. of Claims : 19

(12) PATENT APPLICATION PUBLICATION
(19) INDIA
(22) Date of filing of Application :26/11/2012
(21) Application No.10268/DELNP/2012 A
(43) Publication Date : 05/09/2014

(54) Title of the invention : METHOD FOR RECOVERING NOBLE METALS AND OTHER BYPRODUCTS FROM ORE

(51) International classification :C22B1/00,C22B11/00
(31) Priority Document No :10164665.1
(32) Priority Date :01/06/2010
(33) Name of priority country :EPO
(86) International Application No :PCT/EP2010/064678
Filing Date :01/10/2010
(87) International Publication No :WO 2011/150984
(61) Patent of Addition to Application Number :NA
Filing Date :NA
(62) Divisional to Application Number :NA
Filing Date :NA

(71)**Name of Applicant :**
1)BELAKOVS Voldemars
Address of Applicant :Negoveanu Street 13 9 550308 Sibiu Romania
2)COSTACHE Nicolae
3)CRESTIN Dumitru
4)BANU Geanina Silviana
(72)**Name of Inventor :**
1)BELAKOVS Voldemars
2)COSTACHE Nicolae
3)CRESTIN Dumitru
4)BANU Geanina Silviana

(57) Abstract :
Method for the recovery of noble metals comprising the steps of subjecting ore particles to an electrolytic bath (1) enhanced by an ultrasonic bath (2) the electrolytic bath (1) comprising heavy and/or semi heavy water; shock heating the ore particles for disintegrating them; and separating noble metals from the remains of said disintegrated ore particles.

No. of Pages : 13 No. of Claims : 11

(12) PATENT APPLICATION PUBLICATION
(19) INDIA
(22) Date of filing of Application :26/11/2012
(21) Application No.10269/DELNP/2012 A
(43) Publication Date : 05/09/2014

(54) Title of the invention : NODE SELECTION IN A PACKET CORE NETWORK

(51) International classification :H04L29/12
(31) Priority Document No :NA
(32) Priority Date :NA
(33) Name of priority country :NA
(86) International Application No :PCT/EP2010/060652
Filing Date :22/07/2010
(87) International Publication No :WO 2012/010209
(61) Patent of Addition to Application Number :NA
Filing Date :NA
(62) Divisional to Application Number :NA
Filing Date :NA

(71)**Name of Applicant :**
1)TELEFONAKTIEBOLAGET LM ERICSSON (PUBL)
Address of Applicant :SE 164 83 Stockholm Sweden
(72)**Name of Inventor :**
1)RUNE Johan
2)ARVIDSSON …ke
3)MIH LY Attila

(57) Abstract :
A method of allocating user plane nodes to a connection being established across a packet core network. The method comprises maintaining at a Domain Name System DNS server one or more DNS resource records for each available user plane node or group of neighbouring user plane nodes a DNS resource record containing a measure of a route quality or cost between the associated user plane node(s) or group(s) and each of one or more further user plane nodes or further groups of neighbouring user plane nodes of the packet core network to which said associated user plane node(s) or groups is(are) connected. A connection establishment request is processed at a mobility management control entity within the packet core network with a DNS query being sent to a DNS server the query containing one or more user plane node selection criteria. The query is received at the DNS server and on the basis of the or each criterion one or more DNS resource records satisfying the criteria/criterion identified. At least said measure of route quality or cost of the identified DNS resource record(s) is returned to said mobility management control entity. The measure(s) of route quality or cost of the identified DNS resource record(s) is received at the mobility management control entity and the measure(s) used to allocate a user plane node or nodes to said connection.

No. of Pages : 88 No. of Claims : 27

(12) PATENT APPLICATION PUBLICATION
(19) INDIA
(22) Date of filing of Application :26/11/2012
(21) Application No.10270/DELNP/2012 A
(43) Publication Date : 05/09/2014

(54) Title of the invention : TAP MOUNTING

(51) International classification :E03C1/04
(31) Priority Document No :1008866.4
(32) Priority Date :27/05/2010
(33) Name of priority country :U.K.
(86) International Application No :PCT/GB2011/051010
Filing Date :27/05/2011
(87) International Publication No :WO 2011/148195
(61) Patent of Addition to Application Number :NA
Filing Date :NA
(62) Divisional to Application Number :NA
Filing Date :NA

(71)**Name of Applicant :**
1)BRISTAN GROUP LIMITED
Address of Applicant :Birch Coppice Business Park Dordon Tamworth Staffordshire BD78 1SG U.K.
(72)**Name of Inventor :**
1)LLOYD Ian

(57) Abstract :
A tap mounting (11) for mounting a tap to a plumbing fixture (66) the plumbing fixture having a surface with an aperture (64). The tap mounting (11) comprises an over surface mounting part (12) an under surface mounting part (13) defining a threaded aperture (58) a threaded elongate member (40) and a second elongate member (28). In use the over surface mounting part is above the surface of the plumbing fixture the under surface mounting part is below the surface of the plumbing fixture. The elongate members extend from the over surface mounting part through the plumbing fixture aperture and the threaded elongate member passes through the threaded aperture of the under surface mounting part. Rotation of the under surface mounting part is prevented by the second elongate member. The threaded elongate member comprises an internal bore and is configured for connection to a hose. On installation of the tap mounting the under surface mounting part is arranged to be passed through the plumbing fixture aperture substantially without deformation and the tap mounting is configured to enable it to be secured to the plumbing fixture by manipulation of the tap mounting substantially wholly at or above the surface of the plumbing fixture.

No. of Pages : 34 No. of Claims : 13

(12) PATENT APPLICATION PUBLICATION
(19) INDIA
(22) Date of filing of Application :26/11/2012
(21) Application No.10272/DELNP/2012 A
(43) Publication Date : 05/09/2014

(54) Title of the invention : EMPLOYING REFERENCE SIGNALS IN COMMUNICATIONS

(51) International classification :H04L25/02
(31) Priority Document No :NA
(32) Priority Date :NA
(33) Name of priority country :NA
(86) International Application No :PCT/EP2010/057430
Filing Date :28/05/2010
(87) International Publication No :WO 2011/147463
(61) Patent of Addition to Application Number :NA
Filing Date :NA
(62) Divisional to Application Number :NA
Filing Date :NA

(71)**Name of Applicant :**
1)NOKIA SIEMENS NETWORKS OY
Address of Applicant :Karaportti 3 FI 02610 Espoo Finland
(72)**Name of Inventor :**
1)NIEMELA Kari Juhani

(57) Abstract :
A method is provided comprising receiving a signal on a communications channel correlating the received signal and a reference signal and determining on the basis of a result of the correlation whether the reference signal can be employed on the communications channel.

No. of Pages : 45 No. of Claims : 31

(12) PATENT APPLICATION PUBLICATION
(19) INDIA
(22) Date of filing of Application :26/11/2012
(21) Application No.10276/DELNP/2012 A
(43) Publication Date : 05/09/2014

(54) Title of the invention : APPARATUS AND METHOD FOR SEED SELECTION

(51) International classification :G01N1/28,G01N35/00,A01H1/04
(31) Priority Document No :61/352674
(32) Priority Date :08/06/2010
(33) Name of priority country :U.S.A.
(86) International Application No :PCT/US2011/038686
Filing Date :01/06/2011
(87) International Publication No :WO 2011/156184
(61) Patent of Addition to Application Number :NA
Filing Date :NA
(62) Divisional to Application Number :NA
Filing Date :NA

(71)**Name of Applicant :**
1)PIONEER HI BRED INTERNATIONAL INC.
Address of Applicant :7100 N.W. 62nd Avenue Johnston Iowa 50131 1014 U.S.A.
(72)**Name of Inventor :**
1)BECKER Steven M.
2)COPE Jason
3)DIMOND James D.
4)MONGAN Joshua L.

(57) Abstract :
Apparatuses and methods for selecting one or more seeds from a group of seeds based on a predetermined characteristic of the selected seeds are provided. In various embodiments the seeds are selected from multiple containers of seeds and re configured into a single container for later use. The apparatus includes an array of seed selectors that expel the selected seeds from the corresponding compartments through contact with the compartments. A transfer member then directs each expelled seed to a cavity of a collection tray or into an envelope or other receptacle. A controller may run operation of the apparatus and associate the selected seeds with the cavities and/or receptacle into which they are deposited. In this way numerous seeds may be automatically selected substantially simultaneously or in rapid succession and re configured in a short period of time and with limited user intervention.

No. of Pages : 40 No. of Claims : 20

(12) PATENT APPLICATION PUBLICATION
(21) Application No.10277/DELNP/2012 A
(19) INDIA
(22) Date of filing of Application :26/11/2012
(43) Publication Date : 05/09/2014

(54) Title of the invention : CRYSTALLINE FORM OF 4 [5 [3 CHLORO 5 (TRIFLUOROMETHYL) PHENYL] 4 5 DIHYDRO 5 (TRIFLUOROMETHYL) 3 ISOXAZOLYL] N [2 0X0 2 [(2 2 2 TRIFLUOROETHYL) AMINO] ETHYL] 1 NAPHTHALENECARBOXAMIDE

(51) International classification :C07D261/04,A01N25/00
(31) Priority Document No :61/348958
(32) Priority Date :27/05/2010
(33) Name of priority country :U.S.A.
(86) International Application No :PCT/US2011/037083
Filing Date :19/05/2011
(87) International Publication No :WO 2011/149749
(61) Patent of Addition to Application Number :NA
Filing Date :NA
(62) Divisional to Application Number :NA
Filing Date :NA

(71)**Name of Applicant :**
1)E.I. DU PONT DE NEMOURS AND COMPANY
Address of Applicant :4417 Lancaster Pike Barley Mill Plaza 25 Wilmington DE 19809 U.S.A.
(72)**Name of Inventor :**
1)CURRIE Martin James

(57) Abstract :
Disclosed is a solid form of 4-[5-[3-chloro-5-(trifluoromethyl)phenyl]-4,5-dihydro-5- (trifluoromethyl)-3-isoxazolyl]- iV-[2-oxo-2-[(2,2,2-trifluoroethyl)amino]ethyl]- l - naphthalenecarboxamide (Compound 1). Also disclosed are composi tions containing a solid form of Compound 1 and methods for controlling an invertebrate pest comprising contacting the inverte brate pest or its environment with a biologically effective amount of a solid form of Compound 1 or a composition containing a solid form of Compound 1.

No. of Pages : 56 No. of Claims : 7

(12) PATENT APPLICATION PUBLICATION
(19) INDIA
(22) Date of filing of Application :26/11/2012
(21) Application No.10278/DELNP/2012 A
(43) Publication Date : 05/09/2014

(54) Title of the invention : PROCESS FOR THE PREPARATION OF DIHYDROPYRROLE DERIVATIVES

(51) International classification :C07D413/12,C07D413/14,C07D417/14
(31) Priority Document No :PCT/EP2010/058207
(32) Priority Date :11/06/2010
(33) Name of priority country :EPO
(86) International Application No :PCT/EP2011/059823
Filing Date :14/06/2011
(87) International Publication No :WO 2011/154555
(61) Patent of Addition to Application Number :NA
Filing Date :NA
(62) Divisional to Application Number :NA
Filing Date :NA

(71)**Name of Applicant :**
1)SYNGENTA PARTICIPATIONS AG
Address of Applicant :Schwarzwaldallee 215 CH 4058 Basel Switzerland
2)SYNGENTA LIMITED
(72)**Name of Inventor :**
1)EL QACEMI Myriem
2)SMITS Helmars
3)CASSAYRE Jr´me Yves
4)MULHOLLAND Nicholas Phillip
5)RENOLD Peter
6)GODINEAU Edouard
7)PITTERNA Thomas

(57) Abstract :
The present invention provides stereoselective processes for the prepara tion of compounds of formula (I) wherein P is phenyl, naphthyl, a 6-membered heteroaryl group containing one or two nitrogen atoms as ring members, or a 10-membered bicyclic heteroaryl group containing one or two nitrogen atoms as ring members, and wherein the phenyl, naphthyl and heteroaryl groups are optionally substituted; R1 is chlorodifluoromethyl or trifluoromethyl; R2 is optionally substituted aryl or optionally substituted heteroaryl; n is 0 or 1; including the process comprising (a-i) reacting a compound of formula II wherein P, R1 and R2 are as defined for the compound of for mula I ; with nitromethane in the presence a chiral catalyst to give a compound of for mula III Wherein P, R1 and R2 are as defined for the compound of formula I; and (a-ii) reductively cyclising the compound of formula III to give the compound of formula I . The invention also provides intermediates useful for processes for the synthesis of com pounds of formula (I)

No. of Pages : 161 No. of Claims : 22

(12) PATENT APPLICATION PUBLICATION
(19) INDIA
(22) Date of filing of Application :26/11/2012
(21) Application No.10279/DELNP/2012 A
(43) Publication Date : 05/09/2014

(54) Title of the invention : PESTICIDAL MIXTURES INCLUDING ISOXAZOLINE DERIVATIVES

(51) International classification :A01P7/04,A01N43/80,A01N43/90
(31) Priority Document No :10165344.2
(32) Priority Date :09/06/2010
(33) Name of priority country :EPO
(86) International Application No :PCT/EP2011/059444
Filing Date :08/06/2011
(87) International Publication No :WO 2011/154433
(61) Patent of Addition to Application Number :NA
Filing Date :NA
(62) Divisional to Application Number :NA
Filing Date :NA

(71)**Name of Applicant :**
1)SYNGENTA PARTICIPATIONS AG
Address of Applicant :Schwarzwaldallee 215 CH 4058 Basel Switzerland
(72)**Name of Inventor :**
1)CASSAYRE Jr´me Yves
2)MOLITOR Elvira

(57) Abstract :
The present invention provides pesticidal mixtures comprising a component A and a component B wherein component A is an enantiomeric mixture of a compound of formula I that is enantiomerically enriched for the S enantiomer (Formula I) wherein the symbol indicates the chiral centre; wherein A1 A2 R1 R2 R4 R5 R6 and p are as defined in claim 1 and component B is a compound as defined in claim 1. The present invention also relates to methods of using said mixtures for the control of plant pests.

No. of Pages : 39 No. of Claims : 15

(12) PATENT APPLICATION PUBLICATION
(19) INDIA
(22) Date of filing of Application :21/11/2012
(21) Application No.10094/DELNP/2012 A
(43) Publication Date : 05/09/2014

(54) Title of the invention : BLUE GLASS COMPOSITION

(51) International classification :C03C3/095,C03C4/02,C03C4/08
(31) Priority Document No :12/788810
(32) Priority Date :27/05/2010
(33) Name of priority country :U.S.A.
(86) International Application No :PCT/US2011/037830
Filing Date :25/05/2011
(87) International Publication No :WO 2011/150002
(61) Patent of Addition to Application Number :NA
Filing Date :NA
(62) Divisional to Application Number :NA
Filing Date :NA

(71)**Name of Applicant :**
1)PPG INDUSTRIES OHIO INC.
Address of Applicant :3800 West 143rd Street Cleveland Ohio 44111 U.S.A.
(72)**Name of Inventor :**
1)SHELESTAK Larry J.
2)ARBAB Mehran

(57) Abstract :
A blue colored infrared and ultraviolet absorbing glass composition uses a standard soda lime silica glass base composition and additionally iron cobalt and additional colorants selected from the group of ErO CrO CuO NiO TiO NdO and combinations thereof. The glass of the present invention has a luminous transmittance of up to 60 percent a dominant wavelength in the range of 480 to 489 nanometers and an excitation purity of at least 8 percent at a thickness of 0.160 inches (4.06 millimeters). The glass composition can form transparent glass panels that have varying limited LTA from one another as panel sets for mounting in automobiles.

No. of Pages : 34 No. of Claims : 22

(12) PATENT APPLICATION PUBLICATION
(19) INDIA
(22) Date of filing of Application :21/11/2012
(21) Application No.10095/DELNP/2012 A
(43) Publication Date : 05/09/2014

(54) Title of the invention : A MODULAR DUCTING SECTION ADAPTED FOR LAYING END TO END AND SIDE BY SIDE FORMING A NETWORKED UTILITIES DUCTING SYSTEM AND RAIN AND RUN OFF WATER MANAGEMENT SYSTEM

(51) International classification	:E01C11/22,E01F5/00,E02D29/045
(31) Priority Document No	:2010903400
(32) Priority Date	:30/07/2010
(33) Name of priority country	:Australia
(86) International Application No	:PCT/AU2011/000962
Filing Date	:29/07/2011
(87) International Publication No	:WO 2012/012845
(61) Patent of Addition to Application Number	:NA
Filing Date	:NA
(62) Divisional to Application Number	:NA
Filing Date	:NA

(71)**Name of Applicant :**
1)NETWORKED INFRASTRUCTURE NATIONAL ARCHITECTURE PTY LTD
Address of Applicant :5/21 Trelawney Street Woollahra NSW 2025 Australia
(72)**Name of Inventor :**
1)DIXON Guy Andrew Cotterill

(57) Abstract :
The invention integrates the functionality of: kerbs gutters pathways into a surface accessible networked utility ducting system and a rain and run off water management system. It is comprised of a base section formed a combination of one or more open topped utility access channels an open topped water catchment channel a slopped flange and one or more open sided access and or open topped feeder line distribution channels. The invention includes features for the isolation of electric power channels from contact with other utilities such as gas water or communications. The invention includes features for integration with existing stormwater systems such as overflow points. The invention provides utilities access pathway all the way to an end user s premises with minimal need for digging or disturbance of footpaths or paved surfaces this is a major improvement upon the prior art which transforms the economics of surface accessible utility ducting systems. The invention includes covers which are interchangeable may take various forms such as a pavement and kerb a driveway ramp or a wheel chair access ramp. This allows the invention to be economically adapted to changes in kerb requirements as changes to the pathways and kerbs occur along their length and as requirements change over time this solves the problems associated with the prior art which can not be readily adapted to all the variations found in kerbs and gutters along the length of the kerb and pavement or as they occur over time. The invention enables rain and run off water to be isolated from contamination and managed to preserve its value and usefulness. The invention lowers the cost of and increases the speed of new service deployment thereby overcoming the major economic barriers to market entry of new distributed utility services. The invention is to be manufactured in most cases as precast modules. The channels lids access boxes are linked by flexible interstitial joints which enable the system so formed to change direction to conform with the contours of the landscape in which it is located. In most cases the material of construction will be a dense reinforced material such as concrete. When so constructed the invention will resist the effects of earthquakes cyclones flooding tornados and tsunamis.

No. of Pages : 129 No. of Claims : 47

(12) PATENT APPLICATION PUBLICATION
(19) INDIA
(22) Date of filing of Application :27/11/2012
(21) Application No.10294/DELNP/2012 A
(43) Publication Date : 05/09/2014

(54) Title of the invention : LIGHT WEIGHT SHROUD FIN FOR A ROTOR BLADE

(51) International classification :F01D5/18,F01D5/22
(31) Priority Document No :10162021.9
(32) Priority Date :05/05/2010
(33) Name of priority country :EPO
(86) International Application No :PCT/EP2011/055347
Filing Date :06/04/2011
(87) International Publication No :WO 2011/138112
(61) Patent of Addition to Application Number :NA
Filing Date :NA
(62) Divisional to Application Number :NA
Filing Date :NA

(71)**Name of Applicant :**
1)ALSTOM TECHNOLOGY LTD
Address of Applicant :Brown Boveri Strasse 7 CH Baden 5400 Switzerland
(72)**Name of Inventor :**
1)BRANDL Herbert
2)TSYPKAYKIN Igor
3)INDLEKOFER Philipp

(57) Abstract :
The present invention refers to a turbine blade (1) comprising a fin (6) for a turbo machine especially a turbine. The main object of the present invention to provide an improved lighter rotating blade (6) with reduced the overall blade mass reducing the radial forces of the blades on the rotor without compromising the strength or lifetime of the turbine blade (1). To realize a sufficiently strong light weight fin and thereby a light weight turbine blade (1) the fin (6) comprises a first sidewall (9) and a second sidewall (10) which are spaced apart arranged parallel to each other and which are connected to the shroud (5) and a cutting edge (18) which is connected to the first and second sidewall (9 10) and is thereby creating a hollow space between the sidewalls (9 10) the shroud (5) and the cutting edge (18). The cutting edge (18) is further extending radially away from the first and second sidewall (9 10).

No. of Pages : 17 No. of Claims : 11

(12) PATENT APPLICATION PUBLICATION
(19) INDIA
(22) Date of filing of Application :21/11/2012

(21) Application No.10110/DELNP/2012 A
(43) Publication Date : 05/09/2014

(54) Title of the invention : QUINOLINE DERIVATIVES AS FUNGICIDES

(51) International classification :C07D215/18,C07D215/20,A01N43/42
(31) Priority Document No:10165530.6
(32) Priority Date :10/06/2010
(33) Name of priority country :EPO
(86) International Application No :PCT/EP2011/058369
Filing Date :23/05/2011
(87) International Publication No :WO 2011/154240
(61) Patent of Addition to Application Number :NA
Filing Date :NA
(62) Divisional to Application Number :NA
Filing Date :NA

(71)**Name of Applicant :**
1)SYNGENTA PARTICIPATIONS AG
Address of Applicant :Schwarzwaldallee 215 CH 4058 Basel Switzerland
(72)**Name of Inventor :**
1)QUARANTA Laura
2)TRAH Stephan
3)BEAUDEGNIES Renaud
4)MURPHY KESSABI Fiona
5)BERTHON Guillaume
6)LAMBERTH Clemens

(57) Abstract :
Compounds of the general formula (I) wherein the substituents are as defined in claim 1 are useful as fungicides.

No. of Pages : 38 No. of Claims : 15

(12) PATENT APPLICATION PUBLICATION
(19) INDIA
(22) Date of filing of Application :21/11/2012
(21) Application No.10111/DELNP/2012 A
(43) Publication Date : 05/09/2014

(54) Title of the invention : ORAL CARE COMPOSITIONS AND METHODS

(51) International classification :A61K8/97,A61Q11/00
(31) Priority Document No :NA
(32) Priority Date :NA
(33) Name of priority country :NA
(86) International Application No :PCT/US2010/039725
Filing Date :24/06/2010
(87) International Publication No :WO 2011/162758
(61) Patent of Addition to Application Number :NA
Filing Date :NA
(62) Divisional to Application Number :NA
Filing Date :NA

(71)**Name of Applicant :**
1)COLGATE PALMOLIVE COMPANY
Address of Applicant :300 Park Avenue New York NY 10022 U.S.A.
(72)**Name of Inventor :**
1)WANG Wei
2)BROWN James R.
3)TRIVEDI Harsh M.
4)VAZQUEZ Joe

(57) Abstract :
Disclosed are oral care compositions and the use of such oral care compositions for inhibiting co aggregation of oral bacteria and inhibiting bacterial growth. Also disclosed are methods for inhibiting co aggregation of oral bacteria and inhibiting bacterial growth. The oral care composition includes cranberry extract non dialyzable material in which the cranberry extract non dialyzable material is present in an amount effective to inhibit co aggregation of oral bacteria and/or inhibit bacterial growth.

No. of Pages : 19 No. of Claims : 21

(12) PATENT APPLICATION PUBLICATION
(19) INDIA
(22) Date of filing of Application :21/11/2012
(21) Application No.10116/DELNP/2012 A
(43) Publication Date : 05/09/2014

(54) Title of the invention : NEUREGULIN ISOFORMS NEUREGULIN POLYPEPTIDES AND USES THEREOF

(51) International classification :A61K38/18,C07K14/485
(31) Priority Document No :61/349451
(32) Priority Date :28/05/2010
(33) Name of priority country :U.S.A.
(86) International Application No :PCT/EP2011/058769
Filing Date :27/05/2011
(87) International Publication No :WO 2011/147981
(61) Patent of Addition to Application Number :NA
Filing Date :NA
(62) Divisional to Application Number :NA
Filing Date :NA

(71)**Name of Applicant :**
1)MIND NRG SA
Address of Applicant :2 rue de Jargonnant CH 1207 Gen¨ve Switzerland
(72)**Name of Inventor :**
1)BAUSSANT Thierry
2)BACH Daniel
3)SCHRATTENHOLZ Andr

(57) Abstract :
The present invention relates to new therapeutic and diagnostic uses of soluble neuregulin 1 isoforms and polypeptides particularly neurological disorders.

No. of Pages : 77 No. of Claims : 20

(12) PATENT APPLICATION PUBLICATION
(19) INDIA
(22) Date of filing of Application :21/11/2012
(21) Application No.10117/DELNP/2012 A
(43) Publication Date : 05/09/2014

(54) Title of the invention : METHOD FOR PROCESSING MESSAGES

(51) International classification :H04L12/40
(31) Priority Document No :102010029346.6
(32) Priority Date :27/05/2010
(33) Name of priority country :Germany
(86) International Application No :PCT/EP2011/056035
Filing Date :15/04/2011
(87) International Publication No :WO 2011/147642
(61) Patent of Addition to Application Number :NA
Filing Date :NA
(62) Divisional to Application Number :NA
Filing Date :NA

(71)**Name of Applicant :**
1)ROBERT BOSCH GMBH
Address of Applicant :Postfach 30 02 20 70442 Stuttgart Germany
(72)**Name of Inventor :**
1)BLASCHKE Volker
2)SCHIRMER Juergen
3)LOTHSPEICH Timo
4)LORENZ Tobias
5)SCHROFF Clemens

(57) Abstract :
The invention relates to a method for processing messages with at least one Ethernet controller having a message memory (96), in which the at least one Ethernet controller checks a received message for the presence of at least one property, and in which the received message is stored in the message memory (96) if this at least one property applies to the message.

No. of Pages : 20 No. of Claims : 10

(12) PATENT APPLICATION PUBLICATION
(21) Application No.10118/DELNP/2012 A
(19) INDIA
(22) Date of filing of Application :21/11/2012
(43) Publication Date : 05/09/2014

(54) Title of the invention : COPPER ALLOY FOR ELECTRONIC DEVICE METHOD FOR PRODUCING COPPER ALLOY FOR ELECTRONIC DEVICE AND COPPER ALLOY ROLLED MATERIAL FOR ELECTRONIC DEVICE

(51) International classification :C22C9/00,C22C9/01,C22C9/02
(31) Priority Document No :2010112267
(32) Priority Date :14/05/2010
(33) Name of priority country :Japan
(86) International Application No :PCT/JP2011/060962
Filing Date :12/05/2011
(87) International Publication No :WO 2011/142428
(61) Patent of Addition to Application Number :NA
Filing Date :NA
(62) Divisional to Application Number :NA
Filing Date :NA

(71)**Name of Applicant :**
1)MITSUBISHI MATERIALS CORPORATION
Address of Applicant :3 2 Otemachi 1 chome Chiyoda ku Tokyo 1008117 Japan
(72)**Name of Inventor :**
1)ITO Yuki
2)MAKI Kazunari

(57) Abstract :
Disclosed i s a copper alloy ior an electronic device containing M g in a range o f 2.6 - 9.8 atomic percent and A in a range o f 0 . 1 - 2 0 atomic percent with the with the remainder being substantially C u and inevitable impurities.

No. of Pages : 31 No. of Claims : 9

(12) PATENT APPLICATION PUBLICATION
(21) Application No.10300/DELNP/2012 A
(19) INDIA
(22) Date of filing of Application :27/11/2012
(43) Publication Date : 05/09/2014

(54) Title of the invention : TARGET POINT RECOGNITION METHOD AND SURVEYING INSTRUMENT

(51) International classification :G01C15/00,G01C1/04
(31) Priority Document No :10168772.1
(32) Priority Date :07/07/2010
(33) Name of priority country :EPO
(86) International Application No :PCT/EP2011/061500
Filing Date :07/07/2011
(87) International Publication No :WO 2012/004342
(61) Patent of Addition to Application Number :NA
Filing Date :NA
(62) Divisional to Application Number :NA
Filing Date :NA

(71)**Name of Applicant :**
1)LEICA GEOSYSTEMS AG
Address of Applicant :Heinrich Wild Strasse CH 9435 Heerbrugg Switzerland
(72)**Name of Inventor :**
1)NINDL Daniel
2)ZOGG Hans Martin
3)LIENHART Werner
4)KOTZUR Norbert

(57) Abstract :
Target point recognition method for an automatic search of target points in a surveying environment in advance of a precise measurement of these points wherein an angle in particular a horizontal and a vertical angle to the target points is measured with a surveying instrument the surveying instrument comprising means for measuring angles a camera and processing means for data storing and controlling the following steps in an automated manner after starting the search: a scanning procedure with emitting electromagnetic radiation in form of a scanning beam in particular in the form of a fan to illuminate targets moving the scanning beam within a predetermined angular range in order to scan the surveying environment detecting reflections of the electromagnetic radiation on the targets wherein the targets are defining the target points and determining the angle to the target points a capturing procedure with capturing an overall image of the surveying environment wherein the overall image comprises at least one single image taken by the camera in particular comprising several images stitched together to a panoramic view and determining target points and their angle on the overall image by image processing by matching targets with one or more predetermined search criteria storing the target points together with their angle a data base and displaying the overall image together with marks for indicating a position of the target points detected within the scanning procedure and the capturing procedure in the overall image.

No. of Pages : 29 No. of Claims : 15

(12) PATENT APPLICATION PUBLICATION
(19) INDIA
(22) Date of filing of Application :21/11/2012
(21) Application No.10102/DELNP/2012 A
(43) Publication Date : 05/09/2014

(54) Title of the invention : APPARATUS FOR FITTING CABLE SLEEVES ONTO A CABLE

(51) International classification :H01R43/00
(31) Priority Document No :10166167.6
(32) Priority Date :16/06/2010
(33) Name of priority country :EPO
(86) International Application No :PCT/IB2011/052252
Filing Date :24/05/2011
(87) International Publication No :WO 2011/158145
(61) Patent of Addition to Application Number :NA
Filing Date :NA
(62) Divisional to Application Number :NA
Filing Date :NA

(71)**Name of Applicant :**
1)SCHLEUNIGER HOLDING AG
Address of Applicant :BIERIGUTSTRASSE 9, CH-3608 THUN (CH) Switzerland
(72)**Name of Inventor :**
1)WOSINSKI Eugen

(57) Abstract :
The invention specifies an apparatus (1 a, 1b) for fitting cable grommets (2) onto a cable, said apparatus comprising a loose material container (3) for receiving a plurality of loose cable grommets (2), a conveying device for separating the cable grommets (2) located in the loose material container and for conveying the separated cable grommets (2) to a mounting point as well as a mounting device e (8) for mounting the conveyed cable grommets (2) onto the cable. The conveying device comprises a continuous, annular conveying means (4, 4a, 4b) protruding into the loose material container (3) as well as receiving means (6) for receiving the cable grommets (2). The receiving means (6) are in this case arranged on the conveying means (4, 4a, 4b) on the inside of the aforementioned ring.

No. of Pages : 28 No. of Claims : 15

(12) PATENT APPLICATION PUBLICATION
(19) INDIA
(22) Date of filing of Application :21/11/2012
(21) Application No.10103/DELNP/2012 A
(43) Publication Date : 05/09/2014

(54) Title of the invention : IMPROVED XYLOSE UTILIZATION IN RECOMBINANT ZYMOMONAS HAVING ADDITIONAL XYLOSE ISOMERASE ACTIVITY

(51) International classification :C12N9/92,C12P7/06
(31) Priority Document No :61/359463
(32) Priority Date :29/06/2010
(33) Name of priority country :U.S.A.
(86) International Application No :PCT/US2011/042132
Filing Date :28/06/2011
(87) International Publication No :WO 2012/003178
(61) Patent of Addition to Application Number :NA
Filing Date :NA
(62) Divisional to Application Number :NA
Filing Date :NA

(71)**Name of Applicant :**
1)E. I. DU PONT DE NEMOURS AND COMPANY
Address of Applicant :1007 Market Street Wilmington Delaware 19898 U.S.A.
(72)**Name of Inventor :**
1)KAHSAY Robel Y.
2)QI Min
3)TAO Luan
4)VIITANEN Paul V.
5)YANG Jianjun

(57) Abstract :
Zymomonas expressing xylose isomerase from A. missouriensis was found to have improved xylose utilization, growth, and ethanol production when grown in media containing xylose. Xylose isomerases related to that of A. missourien sis were identified structurally through molecular phylogenetic and Profile Hidden Markov Model analyses, providing xylose isomerases that may be used to improve xy lose utilization.

No. of Pages : 536 No. of Claims : 15

(12) PATENT APPLICATION PUBLICATION
(19) INDIA
(22) Date of filing of Application :21/11/2012
(21) Application No.10104/DELNP/2012 A
(43) Publication Date : 05/09/2014

(54) Title of the invention : MATERIAL TREATMENT AND APPARATUS

(51) International classification :B02C17/16,B01F7/00,B02C17/00
(31) Priority Document No :2010901691
(32) Priority Date :22/04/2010
(33) Name of priority country :Australia
(86) International Application No :PCT/AU2011/000480
Filing Date :27/04/2011
(87) International Publication No :WO 2011/130805
(61) Patent of Addition to Application Number :NA
Filing Date :NA
(62) Divisional to Application Number :NA
Filing Date :NA

(71)**Name of Applicant :**
1)A NEW WAY OF LIVING PTY LTD
Address of Applicant :18 Grand Panorama Court Launching Place Victoria 3139 Australia
(72)**Name of Inventor :**
1)MORRISON Michael

(57) Abstract :
A method and apparatus for very fine grinding which uses a rotor rapidly rotating in a compatible cylindrical housing where there is an improvement of a friction inducing surface on the cylindrical face to assist in the grinding effectiveness.

No. of Pages : 22 No. of Claims : 11

(12) PATENT APPLICATION PUBLICATION
(19) INDIA
(22) Date of filing of Application :21/11/2012

(21) Application No.10106/DELNP/2012 A
(43) Publication Date : 05/09/2014

(54) Title of the invention : COATED IMPLANT

(51) International classification :A61L27/04,A61L27/30,A61L27/34
(31) Priority Document No :61/358968
(32) Priority Date :28/06/2010
(33) Name of priority country :U.S.A.
(86) International Application No :PCT/US2011/041561
Filing Date :23/06/2011
(87) International Publication No :WO 2012/005961
(61) Patent of Addition to Application Number :NA
Filing Date :NA
(62) Divisional to Application Number :NA
Filing Date :NA

(71)**Name of Applicant :**
1)SYNTHES USA LLC
Address of Applicant :1302 Wrights Lane East West Chester PA 19380 U.S.A.
2)SYNTHES GMBH
(72)**Name of Inventor :**
1)VOISARD Cyril
2)THORWARTH Goetz
3)KRAFT Marcus

(57) Abstract :
The disclosure relates to an orthopedic implant comprising a metallic substrate coated with a diamond like carbon (DLC) layer and a layer of a polymeric material placed over the DLC layer that is less stiff than the substrate and methods of manufacturing the same.

No. of Pages : 21 No. of Claims : 26

(12) PATENT APPLICATION PUBLICATION
(19) INDIA
(22) Date of filing of Application :21/11/2012

(21) Application No.10108/DELNP/2012 A
(43) Publication Date : 05/09/2014

(54) Title of the invention : IL 1 BINDING PROTEINS

(51) International classification	:A61K39/395,A61K39/00,C12P21/08
(31) Priority Document No	:61/334917
(32) Priority Date	:14/05/2010
(33) Name of priority country	:U.S.A.
(86) International Application No	:PCT/US2011/036444
Filing Date	:13/05/2011
(87) International Publication No	:WO 2011/143562
(61) Patent of Addition to Application Number	:NA
Filing Date	:NA
(62) Divisional to Application Number	:NA
Filing Date	:NA

(71)**Name of Applicant :**
1)ABBVIE INC.
Address of Applicant :1 North Waukegan Road North Chicago IL 60064 U.S.A.
(72)**Name of Inventor :**
1)WU Chengbin
2)AMBROSI Dominic J.
3)HSIEH Chung ming
4)GHAYUR Tariq

(57) Abstract :
Proteins that bind IL 1a and IL 1 are described along with their use in compositions and methods for treating preventing and diagnosing IL 1 related disorders and for detecting IL 1a and IL 1 in cells tissues samples and compositions.

No. of Pages : 442 No. of Claims : 122

(12) PATENT APPLICATION PUBLICATION
(19) INDIA
(22) Date of filing of Application :27/11/2012

(21) Application No.10296/DELNP/2012 A
(43) Publication Date : 05/09/2014

(54) Title of the invention : CONTROL NETWORK FOR A RAIL VEHICLE

(51) International classification :B61L15/00
(31) Priority Document No :10 2010 026 433.4
(32) Priority Date :08/07/2010
(33) Name of priority country :Germany
(86) International Application No :PCT/EP2011/059933
Filing Date :15/06/2011
(87) International Publication No :WO 2012/004098
(61) Patent of Addition to Application Number :NA
Filing Date :NA
(62) Divisional to Application Number :NA
Filing Date :NA

(71)**Name of Applicant :**
1)SIEMENS AKTIENGESELLSCHAFT
Address of Applicant :Wittelsbacherplatz 2 80333 M¼nchen Germany
(72)**Name of Inventor :**
1)FALK Rainer
2)FRIES Steffen

(57) Abstract :
The invention relates to a control network (1) for a rail vehicle wherein control units of the rail vehicle are connected to each other in a ring shape via at least two communication paths. A first control unit (SG1) transmits utility data (ND) via a communication path in a first direction to a second control unit (SG2) and test data (PD) associated with the utility data for checking the utility data (ND) via another communication path in a second direction opposite to the first direction to the second control unit (SG2). The second control unit (SG2) can thus detect manipulation of data by a third party.

No. of Pages : 27 No. of Claims : 15

(12) PATENT APPLICATION PUBLICATION
(19) INDIA
(22) Date of filing of Application :27/11/2012
(21) Application No.10298/DELNP/2012 A
(43) Publication Date : 05/09/2014

(54) Title of the invention : METHOD FOR MANAGING THE SUPPLY VOLTAGE OF A MICROCONTROLLER FOR AN ELECTRONIC COMPUTER OF A MOTOR VEHICLE

(51) International classification :H02J7/00,H02J7/14,B60L1/00
(31) Priority Document No :1002640
(32) Priority Date :24/06/2010
(33) Name of priority country :France
(86) International Application No :PCT/EP2011/002930
Filing Date :14/06/2011
(87) International Publication No :WO 2011/160787
(61) Patent of Addition to Application Number :NA
Filing Date :NA
(62) Divisional to Application Number :NA
Filing Date :NA

(71)**Name of Applicant :**
1)CONTINENTAL AUTOMOTIVE FRANCE
Address of Applicant :Service Proprit Industrielle 1 avenue Paul Ourliac F 31100 Toulouse France
2)CONTINENTAL AUTOMOTIVE GMBH
(72)**Name of Inventor :**
1)LE HUNG Frdric
2)SAINT MACARY Stphane

(57) Abstract :
The invention relates to a method for managing the supply voltage (V) of an electronic computer (1) of an automobile, wherein the electronic computer (1) comprises: a microcontroller (4), a power supply circuit (3) powered by a voltage o (V i) from a battery and supplying the controller (4) with a supply voltage (V) controlled by a controller (8) having a nominal control frequency (FREF) set by a clock (7); at least one electronic component (5) connected to the microcontroller (4) and connected to the power supply circuit (3) which supplies a controlled supply voltage (V) thereto; a means (9) for communication between the microcontroller (4) and the power supply circuit (3), characterized in that said method comprises the following steps: o the identification, by the microcontroller (4), of an impending change in the usual demand (1D) of at least one electronic component (5); the transmission, by the microcontroller (4) and to the power supply circuit (3) via the communication means (9), of an instruction (S) for increasing the nominal control frequency (FKEF) of the power supply circuit (3); the increase, by the power supply circuit (3), of the nominal control frequency (FREF) thereof

No. of Pages : 17 No. of Claims : 6

(12) PATENT APPLICATION PUBLICATION
(19) INDIA
(22) Date of filing of Application :27/11/2012
(21) Application No.10301/DELNP/2012 A
(43) Publication Date : 05/09/2014

(54) Title of the invention : ABSORBENT ARTICLE HAVING AN IMPROVED LEG CUFF

(51) International classification :A61F13/15
(31) Priority Document No :61/359457
(32) Priority Date :29/06/2010
(33) Name of priority country :U.S.A.
(86) International Application No :PCT/US2011/042173
Filing Date :28/06/2011
(87) International Publication No :WO 2012/003184
(61) Patent of Addition to Application Number :NA
Filing Date :NA
(62) Divisional to Application Number :NA
Filing Date :NA

(71)**Name of Applicant :**
1)THE PROCTER & GAMBLE COMPANY
Address of Applicant :One Procter & Gamble Plaza Cincinnati Ohio 45202 U.S.A.
(72)**Name of Inventor :**
1)LASH Glen Ray

(57) Abstract :
An absorbent article having improved leg cuffs. The absorbent article includes a topsheet a backsheet joined to the topsheet; and an absorbent core positioned between the topsheet and the backsheet. The absorbent core can have longitudinal edges and end edges and the absorbent article can have a leg cuff extending along each longitudinal edge of the absorbent core. The leg cuff can have a lifted position and a flat position a height a width a length a volume an upper surface an inner barrier an outer barrier a lower surface and a cross sectional area that is a generally quadrilateral shape in the lifted position. The cross sectional area is defined by the upper surface the inner barrier the outer barrier and the lower surface.

No. of Pages : 20 No. of Claims : 10

(12) PATENT APPLICATION PUBLICATION
(19) INDIA
(22) Date of filing of Application :27/11/2012
(21) Application No.10302/DELNP/2012 A
(43) Publication Date : 05/09/2014

(54) Title of the invention : CARBOXYLATION CATALYSTS

(51) International classification :B01J31/22,B01J31/24,B01J31/18
(31) Priority Document No :1009656.8
(32) Priority Date :09/06/2010
(33) Name of priority country :U.K.
(86) International Application No :PCT/GB2011/000868
Filing Date :09/06/2011
(87) International Publication No :WO 2011/154700
(61) Patent of Addition to Application Number :NA
Filing Date :NA
(62) Divisional to Application Number :NA
Filing Date :NA

(71)**Name of Applicant :**
1)UNIVERSITY COURT OF THE UNIVERSITY OF ST ANDREWS
Address of Applicant :College Gate North Street St Andrews KY16 9AJ U.K.
(72)**Name of Inventor :**
1)NOLAN Steven P.
2)CAZIN Catherine

(57) Abstract :
THE USE OF A COMPLEX OF THE FORM Z-M-OR IN THE CARBOXYLATION OF A SUBSTRATE IS DESCRIBED. THE GROUP Z IS A TWO-ELECTRON DONOR LIGAND, M IS A METAL AND OR IS SELECTED FROM THE GROUP CONSISTING OF OH, ALKOXY AND ARYLOXY. THE SUBSTRATE MAY BE CARBOXYLATED AT A C-H OR N-H BOND. THE METAL M MAY BE COPPER, SILVER OR GOLD. THE TWO-ELECTRON DONOR LIGAND MAY BE A PHOSPHINE, A CARBENE OR A PHOSPHITE LIGAND. ALSO DESCRIBED ARE METHODS OF MANUFACTURE OF THE COMPLEXES AND METHODS FOR PREPARING ISOTOPICALLY LABELLED CABOXYLIC ACIDS AND CARBOXYLIC ACID DERIVATIVES

No. of Pages : 36 No. of Claims : 24

(12) PATENT APPLICATION PUBLICATION
(19) INDIA
(22) Date of filing of Application :27/11/2012
(21) Application No.10303/DELNP/2012 A
(43) Publication Date : 05/09/2014

(54) Title of the invention : A METHOD AND AN APPARATUS FOR EVALUATING NETWORK PERFORMANCE

(51) International classification :H04L12/26
(31) Priority Document No :NA
(32) Priority Date :NA
(33) Name of priority country :NA
(86) International Application No :PCT/SE2010/050748
Filing Date :29/06/2010
(87) International Publication No :WO 2012/002853
(61) Patent of Addition to Application Number :NA
Filing Date :NA
(62) Divisional to Application Number :NA
Filing Date :NA

(71)**Name of Applicant :**
1)TELEFONAKTIEBOLAGET LM ERICSSON (PUBL)
Address of Applicant :S 164 83 Stockholm Sweden
(72)**Name of Inventor :**
1)MEIROSU Catalin
2)EKELIN Svante
3)JOHNSSON Andreas

(57) Abstract :
The present invention relates to methods and node entities for enabling active measurement for evaluating network performance in a network comprising a logical tree structure 10 representing at least one service. Said service is provided through a set of links from an initial node in an upper level of the tree structure to a node in a lower level of said tree structure. Each node of the tree structure is configured to perform active measurement of link characteristics. One object of the present invention is to provide a method for minimizing the data overhead introduced in a data network during measuring of estimates of the data network performance. By aggregating measurement results of estimated and measured link characteristics in the nodes of said tree structure and propagating the aggregated results and store the aggregated results in the nodes.

No. of Pages : 24 No. of Claims : 10

(12) PATENT APPLICATION PUBLICATION
(19) INDIA
(22) Date of filing of Application :27/11/2012
(21) Application No.10304/DELNP/2012 A
(43) Publication Date : 05/09/2014

(54) Title of the invention : MULTI PHYSICS FUEL ATOMIZER AND METHODS

(51) International classification :B05B7/04
(31) Priority Document No :12/783868
(32) Priority Date :20/05/2010
(33) Name of priority country :U.S.A.
(86) International Application No :PCT/US2011/035758
Filing Date :09/05/2011
(87) International Publication No :WO 2011/146274
(61) Patent of Addition to Application Number :NA
Filing Date :NA
(62) Divisional to Application Number :NA
Filing Date :NA

(71)**Name of Applicant :**
1)LYTESYDE LLC
Address of Applicant :1691 Michigan Avenue Suite 300 Miami Beach Florida 33139 U.S.A.
(72)**Name of Inventor :**
1)AMAYA John
2)CRUFF Luke
3)LULL Joseph
4)PRADO Marcel
5)VIEAU Bradley J.

(57) Abstract :
A fuel atomizer that includes a housing having a fuel inlet and at least one primary orifice positioned at the inlet wherein the at least one orifice configured to disperse a stream of fuel into a plurality of fuel droplets. The plurality of fuel droplets contact a fuel impingement surface to break up the plurality of fuel droplets into a plurality of smaller secondary droplets and create a thin film of secondary droplets on the impingement surface. At least one pressurized air channel delivers an airflow into contact with the secondary droplets. The secondary droplets pass through a plurality of secondary outlet orifices to exit the housing. A size of the plurality of secondary droplets is reduced when passing out of the plurality of secondary orifices.

No. of Pages : 45 No. of Claims : 20

(12) PATENT APPLICATION PUBLICATION
(19) INDIA
(22) Date of filing of Application :27/11/2012
(21) Application No.10305/DELNP/2012 A
(43) Publication Date : 05/09/2014

(54) Title of the invention : HYPOCALORIC HIGH PROTEIN NUTRITIONAL COMPOSITIONS AND METHODS OF USING SAME

(51) International classification :A23L1/29,A61J15/00
(31) Priority Document No :61/359179
(32) Priority Date :28/06/2010
(33) Name of priority country :U.S.A.
(86) International Application No :PCT/US2011/042148
Filing Date :28/06/2011
(87) International Publication No :WO 2012/006074
(61) Patent of Addition to Application Number :NA
Filing Date :NA
(62) Divisional to Application Number :NA
Filing Date :NA

(71)**Name of Applicant :**
1)NESTEC S.A.
Address of Applicant :Avenue Nestle 55 CH 1800 Vevey Switzerland
(72)**Name of Inventor :**
1)BOLSTER Doug
2)ROUGHEAD Zamzam Fariba
3)GREENBERG Norman Alan
4)MAGER Jennifer

(57) Abstract :
Nutritional compositions having reduced amounts of calories and high amounts of protein and methods of making and using the nutritional compositions are provided. The nutritional compositions may include a processed whole food component a high amount of protein and a reduced amount of calories in order to provide a patient with a pH balanced formulation that includes the benefits of food bioactives beyond essential macro and micronutrients without providing excessive energy. Methods of administering such nutritional compositions to patients in need of improved bone muscle neurological immune and/or overall health are also provided.

No. of Pages : 39 No. of Claims : 20

(12) PATENT APPLICATION PUBLICATION
(19) INDIA
(22) Date of filing of Application :22/11/2012
(21) Application No.10129/DELNP/2012 A
(43) Publication Date : 05/09/2014

(54) Title of the invention : EXTRACTION SOLVENTS DERIVED FROM OIL FOR ALCOHOL REMOVAL IN EXTRACTIVE FERMENTATION

(51) International classification :C12P7/16,C11C1/04,C07C29/86
(31) Priority Document No :61/356290
(32) Priority Date :18/06/2010
(33) Name of priority country :U.S.A.
(86) International Application No :PCT/US2011/040842
Filing Date :17/06/2011
(87) International Publication No :WO 2011/159991
(61) Patent of Addition to Application Number :NA
Filing Date :NA
(62) Divisional to Application Number :NA
Filing Date :NA

(71)**Name of Applicant :**
1)BUTAMAX(TM) ADVANCED BIOFUELS LLC
Address of Applicant :Experimental Station Building 268 200 Powder Mill Road Wilmington Delaware 19880 0268 U.S.A.
(72)**Name of Inventor :**
1)ANTON Douglas Robert
2)CIRAKOVIC Jelena
3)DINER Bruce A.
4)GRADY Michael Charles
5)WOERNER Francis J.

(57) Abstract :
In an alcohol fermentation process oil derived from biomass is chemically converted into an extractant available for removal of a product alcohol such as butanol from a fermentation broth. The glycerides in the oil can be chemically converted into a reaction product such as fatty acids fatty alcohols fatty amides fatty acid methyl esters fatty acid glycol esters and hydroxylated triglycerides and mixtures thereof which forms a fermentation product extractant having a partition coefficient for a product alcohol greater than a partition coefficient of the oil of the biomass for the product alcohol. Oil derived from a feedstock of an alcohol fermentation process can be chemically converting into the fermentation product extractant. The oil can be separated from the feedstock prior to the feedstock being fed to a fermentation vessel and the separated oil can be chemically converted to a fermentation product extractant which can then contacted with a fermentation product comprising a product alcohol whereby the product alcohol is separated from the fermentation product.

No. of Pages : 197 No. of Claims : 38

(12) PATENT APPLICATION PUBLICATION
(19) INDIA
(22) Date of filing of Application :27/11/2012
(21) Application No.10316/DELNP/2012 A
(43) Publication Date : 05/09/2014

(54) Title of the invention : VEHICLE SEAT

(51) International classification :B60N2/16,A47C7/02,A47C7/14
(31) Priority Document No :2010223894
(32) Priority Date :01/10/2010
(33) Name of priority country :Japan
(86) International Application No:PCT/JP2011/056740
Filing Date :22/03/2011
(87) International Publication No :WO 2012/042939
(61) Patent of Addition to Application Number :NA
Filing Date :NA
(62) Divisional to Application Number :NA
Filing Date :NA

(71)**Name of Applicant :**
1)TOYOTA SHATAI KABUSHIKI KAISHA
Address of Applicant :100Kanayama Ichiriyama cho Kariya shi Aichi 4480002 Japan
(72)**Name of Inventor :**
1)KURETAKE Hiroyuki

(57) Abstract :
When rotating with fixed end- side axis parts (43, 53) set as rotational axis fulcrums, rotating end- side axis parts (45, 55) of a forward link (41) and a rear link (1) move in an u -down direction. The range of rotation of the forward link (41) i s arranged in a manner such that the rotating end- side axis part (45) of the forward link (41) i s always above a rotation center join ing line (L). The range of rotation of the rear link (1) i s arranged in a manner such that the rotating end- side axis part (55) of the rear link (1) i s in a range that straddles the rotation center joining line (L). A s a result, the rotating end- side axis part (45) of the forward link (41) i s lowered, and only the rotating end-side axis part (55) of the rear link (51) i s raised, until the point where a ro tating end joining line (M) switches : from a below- side position to an above- side position relative to the fixed end-side axis part (53) of the rear link (1). Hence, it i s possible to effectively lift a seat cushion upward when a passenger gets in or out of a vehi cle, in a manner such that the position of the ni s of the passenger are higher relative to the position of the knees of the passenger.

No. of Pages : 33 No. of Claims : 3

(12) PATENT APPLICATION PUBLICATION
(19) INDIA
(22) Date of filing of Application :27/11/2012
(21) Application No.10317/DELNP/2012 A
(43) Publication Date : 05/09/2014

(54) Title of the invention : GRAPHENE OXIDE AND GRAPHITE OXIDE CATALYSTS AND SYSTEMS

(51) International classification :B01J21/18,B01J37/02,B01J19/24
(31) Priority Document No :61/349378
(32) Priority Date :28/05/2010
(33) Name of priority country :U.S.A.
(86) International Application No :PCT/US2011/038327
Filing Date :27/05/2011
(87) International Publication No :WO 2011/150325
(61) Patent of Addition to Application Number :NA
Filing Date :NA
(62) Divisional to Application Number :NA
Filing Date :NA

(71)**Name of Applicant :**
1)GRAPHEA INC.
Address of Applicant :1624 Headway Circle Austin TX 78754 U.S.A.
(72)**Name of Inventor :**
1)BIELAWSKI Christopher W.
2)DREYER Daniel R.

(57) Abstract :
A carbocatalyst for use in oxidation and polymerization reactions includes particles having a carbon and oxygen containing material such as catalytically active graphene oxide and/or catalytically active graphite oxide. In some cases the particles are disposed on a solid support formed of a carbon containing material such as graphene or graphite or a non carbon containing material such as a metallic or insulating material.

No. of Pages : 42 No. of Claims : 106

(12) PATENT APPLICATION PUBLICATION
(19) INDIA
(22) Date of filing of Application :27/11/2012
(21) Application No.10318/DELNP/2012 A
(43) Publication Date : 05/09/2014

(54) Title of the invention : MOULD FOR THE CONSTRUCTION OF A PROTECTION AND SECURING ELEMENT OF THE MATTRESS TYPE AND RELEVANT METHOD

(51) International classification :B28B7/26,B28B23/00
(31) Priority Document No :BO2010A000397
(32) Priority Date :18/06/2010
(33) Name of priority country :Italy
(86) International Application No :PCT/IB2011/052634
Filing Date :16/06/2011
(87) International Publication No :WO 2011/158209
(61) Patent of Addition to Application Number :NA
Filing Date :NA
(62) Divisional to Application Number :NA
Filing Date :NA

(71)**Name of Applicant :**
1)OFFICINE MACCAFERRI S.p.A.
Address of Applicant :Via Kennedy 10 I 40069 Zola Predosa (Bologna) Italy
(72)**Name of Inventor :**
1)FERRAIOLO Francesco

(57) Abstract :
A mould for constructing a protection and securing element of the mattress type comprises an upper frame (10) a lower frame (30) and a plurality of dies engaged in the lower frame and particularly suitable during use for receiving cement material. The upper and lower frames are modular structures which each comprise a plurality of carrier elements which are selectively connected to each other the number and/or length of the carrier elements being variable during use so as to vary the length and/or the width of the mould.

No. of Pages : 27 No. of Claims : 10

(12) PATENT APPLICATION PUBLICATION
(19) INDIA
(22) Date of filing of Application :22/11/2012
(21) Application No.10149/DELNP/2012 A
(43) Publication Date : 05/09/2014

(54) Title of the invention : REMOTE ACTIVATION OF IMAGERY IN NIGHT VISION GOGGLES

(51) International classification :G02B27/01,F41C27/00,H04N5/33
(31) Priority Document No :12/768,002
(32) Priority Date :27/04/2010
(33) Name of priority country :U.S.A.
(86) International Application No :PCT/US2011/030878
Filing Date :01/04/2011
(87) International Publication No :WO 2011/136897
(61) Patent of Addition to Application Number :NA
Filing Date :NA
(62) Divisional to Application Number :NA
Filing Date :NA

(71)**Name of Applicant :**
1)EXELIS INC.
Address of Applicant :1650 Tysons Boulevard Suite 1700 McLean VA 22012 U.S.A.
(72)**Name of Inventor :**
1)SMITH William A.

(57) Abstract :
The present invention relates a system for displaying images. The system includes a user display for viewing images a first sensor for capturing a first image and a second sensor for capturing a second image. A switch mounted on a hand grip of a weapon is toggled by the user to alternately display the first image and the second image.

No. of Pages : 23 No. of Claims : 20

(12) PATENT APPLICATION PUBLICATION
(19) INDIA
(22) Date of filing of Application :27/11/2012
(21) Application No.10324/DELNP/2012 A
(43) Publication Date : 05/09/2014

(54) Title of the invention : SYSTEM AND METHOD FOR PROCESS MANAGEMENT IN A MATERIALS HANDLING FACILITY

(51) International classification :G05B13/04
(31) Priority Document No :12/788117
(32) Priority Date :26/05/2010
(33) Name of priority country :U.S.A.
(86) International Application No :PCT/US2011/038007
Filing Date :25/05/2011
(87) International Publication No :WO 2011/150131
(61) Patent of Addition to Application Number :NA
Filing Date :NA
(62) Divisional to Application Number :NA
Filing Date :NA

(71)**Name of Applicant :**
1)AMAZON TECHNOLOGIES INC.
Address of Applicant :P.O. Box 8102 Reno Nevada 89507 U.S.A.
(72)**Name of Inventor :**
1)HARA Yusuke
2)ALYEA Joseph M.
3)WONG Cherie G.
4)NGUYEN Natalie T.
5)ROTELLA Christopher David
6)DEAN Arlen R.

(57) Abstract :
Various embodiments of a system and method for process management in a materials handling facility are described. Embodiments may include a process control component configured to generate a model of multiple unit handling processes of a materials handling facility. For each process the model may indicate a measured throughput rate. The process control component may be configured to based on at least one target output rate that is a goal for the output rate of a given unit handling process evaluate the model to generate a particular target throughput rate that is a goal for the respective throughput rate of a particular unit handling process that is performed prior to the given unit handling process. The process control component may be configured to based on the particular target throughput rate generate one or more instructions to control the respective throughput rate of units processed by the particular unit handling process.

No. of Pages : 72 No. of Claims : 15

(12) PATENT APPLICATION PUBLICATION
(19) INDIA
(22) Date of filing of Application :27/11/2012
(21) Application No.10325/DELNP/2012 A
(43) Publication Date : 05/09/2014

(54) Title of the invention : METHODS AND COMPOSITIONS FOR INHIBITION OF THE TRANSITIONAL ENDOPLASMIC RETICULUM ATPASE

(51) International classification	:A61K31/517,A61K31/53,A61K31/4184
(31) Priority Document No	:61/332667
(32) Priority Date	:07/05/2010
(33) Name of priority country	:U.S.A.
(86) International Application No Filing Date	:PCT/US2011/035654 :06/05/2011
(87) International Publication No	:WO 2011/140527
(61) Patent of Addition to Application Number Filing Date	:NA :NA
(62) Divisional to Application Number Filing Date	:NA :NA

(71)**Name of Applicant :**
1)CALIFORNIA INSTITUTE OF TECHNOLOGY
Address of Applicant :Technology Transfer 1200 E. California Boulevard M/C 210 85 Pasadena CA 91125 U.S.A.
2)THE UNIVERSITY OF KANSAS
3)CLEAVE BIOSCIENCES INC. (CLEAVE)
(72)**Name of Inventor :**
1)DESHAIES Raymond J.
2)CHOU Tsui Fen
3)SCHOENEN Frank J.
4)LI Kelin
5)FRANKOWSKI Kevin J.
6)AUBE Jeffrey
7)GERRITZ Samuel W.
8)ZHOU Han Jie

(57) Abstract :
COMPOUNDS OF FORMULAS I-XLIII ARE IDENTIFIED AS DIRECT INHIBITORS OF P97 ATPASE OR OF THE DEGRADATION OF A P97-DEPENDENT UBIQUITIN-PROTEASOME SYSTEM (UPS) SUBSTRATE. METHODS AND COMPOSITIONS ARE DISCLOSED FOR INHIBITING P97 ATPASE AND THE DEGRADATION OF A P97-DEPENDENT UPS SUBSTRATE, AND FOR IDENTIFYING INHIBITORS THEREOF.

No. of Pages : 154 No. of Claims : 18

(12) PATENT APPLICATION PUBLICATION
(19) INDIA
(22) Date of filing of Application :27/11/2012
(21) Application No.10326/DELNP/2012 A
(43) Publication Date : 05/09/2014

(54) Title of the invention : IMPROVED COMPLEMENT RECEPTOR 2 (CR2) TARGETING GROUPS

(51) International classification :C07K14/705,C07K19/00
(31) Priority Document No :61/345035
(32) Priority Date :14/05/2010
(33) Name of priority country :U.S.A.
(86) International Application No :PCT/US2011/036552
Filing Date :13/05/2011
(87) International Publication No :WO 2011/143637
(61) Patent of Addition to Application Number :NA
Filing Date :NA
(62) Divisional to Application Number :NA
Filing Date :NA

(71)**Name of Applicant :**
1)THE REGENTS OF THE UNIVERSITY OF COLORADO a Body Corporate
Address of Applicant :1800 Grant Street 8th Floor Denver CO 80203 U.S.A.
(72)**Name of Inventor :**
1)KOVACS James
2)HANNAN Jonathan P.
3)HOLERS V. Michael

(57) Abstract :
Provided herein are compositions and methods directed to soluble proteins which can selectively deliver modulators of complement activity. Targeted delivery of these modulators is accomplished by selectively mutating particular amino acids in a targeting protein portion of the composition corresponding to at least the first two N terminal SCR domains of CR2. Depending on the particular combination of mutations introduced into the targeting portion a complement activity modulator can be selectively delivered to particular ligands of CR2 at sites where complement system activation or suppression is desired.

No. of Pages : 194 No. of Claims : 37

(12) PATENT APPLICATION PUBLICATION
(19) INDIA
(22) Date of filing of Application :27/11/2012
(21) Application No.10327/DELNP/2012 A
(43) Publication Date : 05/09/2014

(54) Title of the invention : HUMANISED ANTIGEN BINDING PROTEINS TO MYOSTATIN6

(51) International classification :C07K16/22,A61K39/395,A61P21/06
(31) Priority Document No :61/350968
(32) Priority Date :03/06/2010
(33) Name of priority country :U.S.A.
(86) International Application No :PCT/EP2011/059173
Filing Date :02/06/2011
(87) International Publication No :WO 2011/151432
(61) Patent of Addition to Application Number :NA
Filing Date :NA
(62) Divisional to Application Number :NA
Filing Date :NA

(71)**Name of Applicant :**
1)GLAXO GROUP LIMITED
Address of Applicant :Glaxo Wellcome House Berkeley Avenue Greenford Middlesex UB6 0NN U.K.
(72)**Name of Inventor :**
1)ASHMAN Claire
2)ASHMAN Stephen
3)HAMBLIN Paul Andrew
4)LEWIS Alan Peter
5)ORECCHIA Martin Anibal

(57) Abstract :
The present invention relates to humanised antigen binding proteins such as antibodies which bind to myostatin polynucleotides encoding such antigen binding proteins pharmaceutical compositions comprising said antigen binding proteins and methods of manufacture. The present invention also concerns the use of such humanised antigen binding proteins in the treatment or prophylaxis of diseases associated with any one or a combination of decreased muscle mass muscle strength and muscle function.

No. of Pages : 260 No. of Claims : 26

(12) PATENT APPLICATION PUBLICATION
(19) INDIA
(22) Date of filing of Application :22/11/2012
(21) Application No.10155/DELNP/2012 A
(43) Publication Date : 05/09/2014

(54) Title of the invention : PATHWAY RECOGNITION ALGORITHM USING DATA INTEGRATION ON GENOMIC MODELS (PARADIGM)

(51) International classification :G06F19/00
(31) Priority Document No :61/343,575
(32) Priority Date :29/04/2010
(33) Name of priority country :U.S.A.
(86) International Application No :PCT/US2011/000752
Filing Date :29/04/2011
(87) International Publication No :WO 2011/139345
(61) Patent of Addition to Application Number :NA
Filing Date :NA
(62) Divisional to Application Number :NA
Filing Date :NA

(71)**Name of Applicant :**
1)THE REGENTS OF THE UNIVERSITY OF CALIFORNIA
Address of Applicant :UC Office of the President 1111 Franklin Street 5th Floor Oakland CA 94607 U.S.A.
(72)**Name of Inventor :**
1)VASKE Charles J.
2)BENZ Stephen C.
3)STUART Joshua M.
4)HAUSSLER David

(57) Abstract :
The present invention relates to methods for evaluating the probability that a patient s diagnosis may be treated with a particular clinical regimen or therapy.

No. of Pages : 173 No. of Claims : 32

(12) PATENT APPLICATION PUBLICATION
(19) INDIA
(22) Date of filing of Application :22/11/2012
(21) Application No.10156/DELNP/2012 A
(43) Publication Date : 05/09/2014

(54) Title of the invention : USES OF PHOSPHOLIPID CONJUGATES OF SYNTHETIC TLR7 AGONISTS

(51) International classification :A61K31/52,A61K31/66,A61K9/16
(31) Priority Document No :61/343,573
(32) Priority Date :30/04/2010
(33) Name of priority country :U.S.A.
(86) International Application No :PCT/US2011/000757
Filing Date :29/04/2011
(87) International Publication No :WO 2011/139348
(61) Patent of Addition to Application Number :NA
Filing Date :NA
(62) Divisional to Application Number :NA
Filing Date :NA

(71)**Name of Applicant :**
1)THE REGENTS OF THE UNIVERSITY OF CALIFORNIA
Address of Applicant :Office of Technology Transfer 1111 Franklin Street 5th Floor Oakland California 94607 5200 U.S.A.
(72)**Name of Inventor :**
1)CARSON Dennis A.
2)COTTAM Howard B.
3)HAYASHI Tomoko
4)CHAN Michael
5)WU Christina C.N.

(57) Abstract :
The invention provides uses for phospholipid conjugates of TLR agonists for instance in vaccines and to prevent inhibit or treat a variety of disorders including inflammation cancer and pathogen e.g. microbe infection.

No. of Pages : 94 No. of Claims : 48

(12) PATENT APPLICATION PUBLICATION
(19) INDIA
(22) Date of filing of Application :22/11/2012

(21) Application No.10158/DELNP/2012 A
(43) Publication Date : 05/09/2014

(54) Title of the invention : DRUG DELIVERY DEVICE

(51) International classification	:A61M5/142,A61M5/145,A61M5/46
(31) Priority Document No	:61/346,542
(32) Priority Date	:20/05/2010
(33) Name of priority country	:U.S.A.
(86) International Application No	:PCT/US2011/030182
Filing Date	:28/03/2011
(87) International Publication No	:WO 2011/146166
(61) Patent of Addition to Application Number	:NA
Filing Date	:NA
(62) Divisional to Application Number	:NA
Filing Date	:NA

(71)**Name of Applicant :**
1)BECTON DICKINSON AND COMPANY
Address of Applicant :One Becton Drive Franklin Lakes NJ 07417 U.S.A.
(72)**Name of Inventor :**
1)CRONENBERG Richard A.
2)VEDRINE Lionel
3)ALCHAS Paul

(57) Abstract :
The subject invention provides a drug delivery device (10) for injecting medicament which includes: a tubular reservoir (14) for accommodating a medicament; a stopper (44) slidably disposed in the reservoir; a spring (58) for moving the stopper from a first position to a second position in the reservoir; at least one needle (16) the needle having a distal end (46) for insertion into a patient and a lumen (48) extending proximally from the distal end the lumen being in direct or indirect communication with the reservoir; a needle driver (18) for displacing the needle from a first state to a second state; and an actuator (20). Activation of the actuator causes the spring to move the stopper from the first position and towards the second position and the needle driver to displace the needle from the first state and towards the second state. The needle moves relative to and separately from the reservoir with the needle being displaced from the first state and towards the second state. Advantageously with the subject invention a drug delivery device is provided wherein a needle is moved relative to the reservoir in being displaced for injection. This permits control of the needle displacement separate from the reservoir.

No. of Pages : 48 No. of Claims : 13

(12) PATENT APPLICATION PUBLICATION
(21) Application No.10352/DELNP/2012 A
(19) INDIA
(22) Date of filing of Application :29/11/2012
(43) Publication Date : 05/09/2014

(54) Title of the invention : ARRANGEMENT FOR CONNECTING TWO RAIL SEGMENTS

(51) International classification :B66C7/02,E01B25/24
(31) Priority Document No :10 2010 037 523.3
(32) Priority Date :14/09/2010
(33) Name of priority country :Germany
(86) International Application No :PCT/EP2011/065336
Filing Date :05/09/2011
(87) International Publication No :WO 2012/034895
(61) Patent of Addition to Application Number :NA
Filing Date :NA
(62) Divisional to Application Number :NA
Filing Date :NA

(71)**Name of Applicant :**
1)DEMAG CRANES & COMPONENTS GMBH
Address of Applicant :Ruhrstr. 28 58300 Wetter Germany
(72)**Name of Inventor :**
1)SPIES Gerd
2)PASSMANN Christoph

(57) Abstract :
The invention relates to an arrangement of two rail segments (2aa, 2ab; 2ba, 2bb), consisting of at least one mounting element (7) disposed at each rail segment (2aa, 2ab; 2ba, 2bb), and of at least one connector in contact with the mounting elements (7), by means of which the rail segments (2aa, 2ab; 2ba, 2bb) can be connected to each other at the end faces thereof, wherein each mounting 10 element (7) is attached to the corresponding rail segment (2aa, 2ab; 2ba, 2bb) by means of a welding seam (12). In order to produce an improved arrangement for connecting rail segments with respect to dynamic loading, at least one end (13) of the welding seam (12) ends in a region on the rail segment (2aa, 2ab; 2ba, 2bb) outside of the mounting element (7).

No. of Pages : 14 No. of Claims : 11

(12) PATENT APPLICATION PUBLICATION
(19) INDIA
(22) Date of filing of Application :29/11/2012
(21) Application No.10353/DELNP/2012 A
(43) Publication Date : 05/09/2014

(54) Title of the invention : METHOD FOR THE CATALYTIC REMOVAL OF CARBON DIOXIDE AND SULPHUR DIOXIDE FROM EXHAUST GASES

(51) International classification :B01D53/50,B01D53/62
(31) Priority Document No :91 685
(32) Priority Date :07/05/2010
(33) Name of priority country :Luxembourg
(86) International Application No :PCT/EP2011/057271
Filing Date :06/05/2011
(87) International Publication No :WO 2011/138425
(61) Patent of Addition to Application Number :NA
Filing Date :NA
(62) Divisional to Application Number :NA
Filing Date :NA

(71)**Name of Applicant :**
1)CPPE Carbon Process & Plant Engineering S.A.
Address of Applicant :Rue de la Cimenterie L 1337 Luxembourg Dommeldange Luxembourg
(72)**Name of Inventor :**
1)STRICKROTH Alain

(57) Abstract :
The present invention relates to a method for the catalytic removal of sulphur dioxide and carbon dioxide from exhaust gases in a reactor charged with an activated carbon catalyst wherein the method comprises the following steps: saturation of the activated carbon with SO saturation or partial saturation of the exhaust gases with water introduction of the exhaust gases into the reactor catalytic conversion of the SO to HSO and in parallel thereto the catalytic conversion in the presence of the same catalyst of CO to C and O and also to sulphur carbon compounds. Washing out the catalyst and discharging the HSO as liquid and the C as solid and/or bound to sulphur compounds.

No. of Pages : 23 No. of Claims : 9

(12) PATENT APPLICATION PUBLICATION
(19) INDIA
(22) Date of filing of Application :29/11/2012
(21) Application No.10365/DELNP/2012 A
(43) Publication Date : 05/09/2014

(54) Title of the invention : TUBE FEED PACKAGES AND METHODS FOR USING SAME

(51) International classification :A23L1/29,A61J15/00
(31) Priority Document No :61/359,184
(32) Priority Date :28/06/2010
(33) Name of priority country :U.S.A.
(86) International Application No :PCT/US2011/042152
Filing Date :28/06/2011
(87) International Publication No :WO 2012/006075
(61) Patent of Addition to Application Number :NA
Filing Date :NA
(62) Divisional to Application Number :NA
Filing Date :NA

(71)**Name of Applicant :**
1)NESTEC S.A.
Address of Applicant :Avenue Nestle 55 CH 1800 Vevey Switzerland
(72)**Name of Inventor :**
1)MAGER Jennifer
2)ROUGHEAD Zamzam Fariba
3)STORM Heidi
4)TERESI James Scott

(57) Abstract :
Nutritional compositions that mimic whole foods and methods of using the nutritional compositions are provided. The nutritional compositions may include an increased number and variety of fruits and vegetables an increased variety of macronutrient sources and an increased amount of other components that are found in whole foods. The nutritional compositions may also include ethnicity specific meals and organic ingredients and provide emotional appeal to the patient and/or the patient s caregiver. Methods of administering such nutritional compositions to patients in need of same are also provided

No. of Pages : 53 No. of Claims : 20

(12) PATENT APPLICATION PUBLICATION
(21) Application No.10366/DELNP/2012 A
(19) INDIA
(22) Date of filing of Application :29/11/2012
(43) Publication Date : 05/09/2014

(54) Title of the invention : METHODS FOR ADMINISTERING TUBE FEED FORMULATIONS

(51) International classification :A23L1/29,A61J15/00
(31) Priority Document No :61/359184
(32) Priority Date :28/06/2010
(33) Name of priority country :U.S.A.
(86) International Application No :PCT/US2011/042156
Filing Date :28/06/2011
(87) International Publication No :WO 2012/006078
(61) Patent of Addition to Application Number :NA
Filing Date :NA
(62) Divisional to Application Number :NA
Filing Date :NA

(71)**Name of Applicant :**
1)NESTEC S.A.
Address of Applicant :Avenue Nestle 55 CH 1800 Vevey Switzerland
(72)**Name of Inventor :**
1)MAGER Jennifer
2)ROUGHEAD Zamzam Fariba
3)STORM Heidi
4)TERESI James Scott

(57) Abstract :
Nutritional compositions that mimic whole foods and methods of using the nutritional compositions are provided. The nutritional compositions may include an increased number and variety of fruits and vegetables an increased variety of macronutrient sources and an increased amount of other components that are found in whole foods. Methods of administering such nutritional compositions to patients in need of same are also provided. The methods may include administering tube feed formulations to a patient at typical meal times such as for example breakfast lunch and dinner.

No. of Pages : 53 No. of Claims : 20

(12) PATENT APPLICATION PUBLICATION
(21) Application No.10367/DELNP/2012 A
(19) INDIA
(22) Date of filing of Application :29/11/2012
(43) Publication Date : 05/09/2014

(54) Title of the invention : FAST HEAT UP OF A THERMAL CONDITIONING DEVICE E.G. FOR COFFEE MACHINE

(51) International classification :A47J31/56,A47J31/54
(31) Priority Document No :10166366.4
(32) Priority Date :17/06/2010
(33) Name of priority country :EPO
(86) International Application No :PCT/EP2011/059771
Filing Date :14/06/2011
(87) International Publication No :WO 2011/157675
(61) Patent of Addition to Application Number :NA
Filing Date :NA
(62) Divisional to Application Number :NA
Filing Date :NA

(71)**Name of Applicant :**
1)NESTEC S.A.
Address of Applicant :Av. Nestl 55 CH 1800 Vevey Switzerland
(72)**Name of Inventor :**
1)ETTER Stefan
2)M–RI Peter

(57) Abstract :
The invention concerns a unit (1000) for controlling transmission of power to a thermal conditioning device (100) e.g. for coffee machine comprising a controller (2) with a start up profile for starting up said device (100) from a temperature of inactivity (TI) to an operative temperature for bringing to a target temperature (TT) a fluid circulating through said device (100) at start up end said controller (2) being arranged to allow circulation of fluid through said device (100) at start up end and to compare the determined temperature (SOT) of fluid circulated at start up end to the target temperature (TT) and derive a temperature difference therefrom. It is characterized in that the start up profile has at least one parameter and in that said controller (2) has a self learning mode for adjusting said parameter as a function of said temperature difference and to store the adjusted parameter for a subsequent starting up of said device (100). The invention concerns in particular a method for optimized heating up of a coffee machine (104).

No. of Pages : 41 No. of Claims : 15

(12) PATENT APPLICATION PUBLICATION
(19) INDIA
(22) Date of filing of Application :29/11/2012
(21) Application No.10368/DELNP/2012 A
(43) Publication Date : 05/09/2014

(54) Title of the invention : DISPENSING CONTAINER FOR PROBIOTICS

(51) International classification :B65D1/02,B65D1/09,B65D77/08
(31) Priority Document No :10165810.2
(32) Priority Date :14/06/2010
(33) Name of priority country :EPO
(86) International Application No :PCT/EP2011/058742
Filing Date :27/05/2011
(87) International Publication No :WO 2011/157531
(61) Patent of Addition to Application Number :NA
Filing Date :NA
(62) Divisional to Application Number :NA
Filing Date :NA

(71)**Name of Applicant :**
1)NESTEC S.A.
Address of Applicant :Av. Nestl 55 CH 1800 Vevey Switzerland
(72)**Name of Inventor :**
1)HUBER HAAG Karl Josef

(57) Abstract :
The present invention proposes a dispensing container (1) for probiotics (2) in a viscous or liquid carrier (3) the probiotics (2) having a higher specific weight than the viscous or liquid carrier (3) wherein the container (1) comprises a reservoir (4) for holding the carrier (3) and a dispensing head (5) being in fluid connection with the reservoir (4) the dispensing head (5) comprising at least one outlet (6) wherein the concentration of the probiotics (2) decreases from the outlet (6) of the dispensing head (5) towards a bottom portion (1a) of the reservoir (1).

No. of Pages : 42 No. of Claims : 18

(12) PATENT APPLICATION PUBLICATION
(19) INDIA
(22) Date of filing of Application :29/11/2012

(21) Application No.10369/DELNP/2012 A
(43) Publication Date : 05/09/2014

(54) Title of the invention : FEEDING DEVICE

(51) International classification :A61J11/00
(31) Priority Document No :10165809.4
(32) Priority Date :14/06/2010
(33) Name of priority country :EPO
(86) International Application No :PCT/EP2011/058745
Filing Date :27/05/2011
(87) International Publication No :WO 2011/157532
(61) Patent of Addition to Application Number :NA
Filing Date :NA
(62) Divisional to Application Number :NA
Filing Date :NA

(71)**Name of Applicant :**
1)NESTEC S.A.
Address of Applicant :Avenue Nestl 55 CH 1800 Vevey Switzerland
(72)**Name of Inventor :**
1)HUBER HAAG Karl Josef
2)BUREAU FRANZ Isabelle

(57) Abstract :
The invention relates to a feeding device (1 1 1) having a hollow form the feeding device (1 1 1) comprising: an inlet portion (2 2 2) having an inlet (4 4) for entering nutrition(13) and a suction portion (3 3 3) for sucking the nutrition (13) through the inlet (4 4) into the feeding device (1 1 1) wherein the suction portion (3 3 3) comprises at least one opening (5 5 5) for dispensing the sucked nutrition (13) wherein the inner surface (6 6 6) of the feeding device (1 1 1) confines a flow path (P P P) for the nutrition (13) and wherein the feeding device (1 1 1) is at least partially deformable. The feeding device is characterized in that a nutritional additive (7 7 7) is adhered to the flow path confining inner surface (6 6 6) of the feeding device (1 1 1) such that the nutritional additive (7 7 7) is mechanically segregated from the inner surface (6 6 6) when the feeding device (1 1 1) is deformed.

No. of Pages : 39 No. of Claims : 21

(12) PATENT APPLICATION PUBLICATION
(19) INDIA
(22) Date of filing of Application :29/11/2012
(21) Application No.10370/DELNP/2012 A
(43) Publication Date : 05/09/2014

(54) Title of the invention : ARRAY OF AGE TAILORED NUTRITIONAL FORMULA WITH OPTIMUM FAT CONTENT

(51) International classification :A23L1/29,A23L1/30,A61P1/00
(31) Priority Document No :10168872.9
(32) Priority Date :08/07/2010
(33) Name of priority country :EPO
(86) International Application No :PCT/EP2011/061339
Filing Date :05/07/2011
(87) International Publication No :WO 2012/004273
(61) Patent of Addition to Application Number :NA
Filing Date :NA
(62) Divisional to Application Number :NA
Filing Date :NA

(71)**Name of Applicant :**
1)NESTEC S.A.
Address of Applicant :Av. Nestl 55 CH 1800 Vevey Switzerland
(72)**Name of Inventor :**
1)MAGLIOLA Corinne
2)KLASSEN Petra

(57) Abstract :
The present invention relates to nutritional formulae which are specifically designed to address the needs of infants and young children between 0 and 2 years. In particular the invention provides a set of nutritional compositions for infants and young children each nutritional composition having age specific fat contents. The set of the invention is specifically aimed at providing long term benefits to an infant/young child by meeting its nutritional needs at each specific age.

No. of Pages : 29 No. of Claims : 15

(12) PATENT APPLICATION PUBLICATION
(21) Application No.10371/DELNP/2012 A
(19) INDIA
(22) Date of filing of Application :29/11/2012
(43) Publication Date : 05/09/2014

(54) Title of the invention : IMPROVEMENTS TO A PLASTIC ELECTROLYTIC CELL HAVING A BIPOLAR TYPE MEMBRANE

(51) International classification	:C25B9/00,C25B15/00
(31) Priority Document No	:Mx/a/2010/004711
(32) Priority Date	:29/04/2010
(33) Name of priority country	:Mexico
(86) International Application No	:PCT/MX2010/000064
Filing Date	:15/07/2010
(87) International Publication No	:WO 2011/136630
(61) Patent of Addition to Application Number	:NA
Filing Date	:NA
(62) Divisional to Application Number	:NA
Filing Date	:NA

(71)**Name of Applicant :**
1)TAMEZ SALAZAR Hermilo
Address of Applicant :Av. Lagrange #108 Fracc. Colonial Lagrange CP. 66490 San Nicolas de los Garza Nuevo Leon Mexico
(72)**Name of Inventor :**
1)TAMEZ SALAZAR Hermilo

(57) Abstract :
The invention relates to improvements to a plastic electrolytic cell having a bipolar-type membrane, that are based on the structural configuration thereof, which allows independent distribution of the brine feeds, since it is possible to inspect visually the continuity of the flow through the two transparent restrictor hoses (5) of smaller diameter, as well as the discharge of products through the two upper compartments (6 and 8), wherein compartment 8 allows an overflow level which fills the section of the anode ana cathode tank (not shown) and separates the turbulence area from the membrane area (not shown), overflowing through the transparent ringed hose (11) that is used for inspection and to interrupt the leakage flow to the collector tube (12). This improvement also relates to a structure reinforced with a projection, maintaining the perpendicularity of the sealing faces of the integrated plastic injection plate (24) separating the anode and cathode compartments of the plastic frame (1). In addition, at the intersections of the grid formed by the aforementioned reinforcements (not shown), a projecting post (20) serves to support the anode and cathode meshes (15) in order to maintain the perpendicularity of the subsequent cell and to maintain the minimum separation required between the activated electrodes to achieve a lower voltage drop in the electrolytic cell, resulting in greater current efficiency and an electrical energy (KWh) saving.

No. of Pages : 11 No. of Claims : 7

(12) PATENT APPLICATION PUBLICATION
(19) INDIA
(22) Date of filing of Application :29/11/2012

(21) Application No.10372/DELNP/2012 A
(43) Publication Date : 05/09/2014

(54) Title of the invention : A RELAY NODE A DONOR RADIO BASE STATION AND METHODS THEREIN

(51) International classification :H04W88/18
(31) Priority Document No :PCT/SE2010/050687
(32) Priority Date :18/06/2010
(33) Name of priority country :Sweden
(86) International Application No :PCT/SE2011/050457
Filing Date :14/04/2011
(87) International Publication No :WO 2011/159221
(61) Patent of Addition to Application Number :NA
Filing Date :NA
(62) Divisional to Application Number :NA
Filing Date :NA

(71)**Name of Applicant :**
1)TELEFONAKTIEBOLAGET L M ERICSSON (PUBL)
Address of Applicant :S 164 83 Stockholm Sweden
(72)**Name of Inventor :**
1)MASINI Gino Luca
2)VOLTOLINA Elena
3)MILDH Gunnar
4)GUNNARSSON Fredrik

(57) Abstract :
Embodiments herein relate to a method in a relay node (10) for acquiring information about a type of a radio network connection between a donor radio base station (12) and a radio base station (14). The relay node (10) and the donor radio base station (12) are comprised in a radio communications network and the donor radio base station (12) is serving the relay node (10). The relay node (10) receives a message from the donor radio base station (12) which message is indicating a type of radio network application protocol which type is related to a type of the radio network connection between the donor radio base station (12) and the radio base station (14). The relay node (10) determines the type of the radio network connection based on the type of radio network application protocol indicated in the message. The relay node (10) also stores the type of radio network connection in relation to the radio base station (14) for selecting the type of radio network connection when later communicating with the radio base station (14).

No. of Pages : 58 No. of Claims : 4

(12) PATENT APPLICATION PUBLICATION
(19) INDIA
(22) Date of filing of Application :29/11/2012

(21) Application No.10373/DELNP/2012 A
(43) Publication Date : 05/09/2014

(54) Title of the invention : A SYSTEM METHOD AND DEVICE FOR EXECUTING A COMPOSITE SERVICE

(51) International classification :G06F9/445,G06F13/00
(31) Priority Document No :NA
(32) Priority Date :NA
(33) Name of priority country :NA
(86) International Application No :PCT/JP2010/062967
Filing Date :23/07/2010
(87) International Publication No :WO 2012/011196
(61) Patent of Addition to Application Number :NA
Filing Date :NA
(62) Divisional to Application Number :NA
Filing Date :NA

(71)**Name of Applicant :**
1)Telefonaktiebolaget L M Ericsson (publ)
Address of Applicant :Se 164 83 Stockholm Sweden
(72)**Name of Inventor :**
1)KATO Ryoji
2)ODA Toshikane
3)KRISTIANSSON Johan
4)FIKOURAS Ioannis

(57) Abstract :
A system for executing a composite service formed by a plurality of software components the plurality of software components including a first software component and a second software component which is referred from the first software component is provided. The system includes an execution unit configured to execute the first software component; a specification unit configured to specify address information to be used for downloading the second software component and a target device intended to execute the second software component; and a deployment unit configured to deploy the second software component downloaded by use of the address information to the target device. The deployment unit is configured to deploy the second software component while the execution unit is executing the first software component so that the execution unit can call the second software component.

No. of Pages : 45 No. of Claims : 12

(12) PATENT APPLICATION PUBLICATION
(19) INDIA
(22) Date of filing of Application :22/11/2012
(21) Application No.10165/DELNP/2012 A
(43) Publication Date : 05/09/2014

(54) Title of the invention : SUBSTRATE FOR LIQUID CRYSTAL DISPLAY DEVICE AND LIQUID CRYSTAL DISPLAY DEVICE

(51) International classification	:G02F1/1335,G02F1/1337,G02F1/1343
(31) Priority Document No	:2010-121909
(32) Priority Date	:27/05/2010
(33) Name of priority country	:Japan
(86) International Application No	:PCT/JP2011/057373
Filing Date	:25/03/2011
(87) International Publication No	:WO 2011/148706
(61) Patent of Addition to Application Number	:NA
Filing Date	:NA
(62) Divisional to Application Number	:NA
Filing Date	:NA

(71)**Name of Applicant :**
1)TOPPAN PRINTING CO. LTD.
Address of Applicant :5 1 Taito 1 chome Taito ku Tokyo 1100016 Japan
(72)**Name of Inventor :**
1)HAGIWARA Hidesato
2)SHIMIZU Mie
3)FUKUYOSHI Kenzo
4)TAGUCHI Takao
5)NA

(57) Abstract :
Disclosed i s an electrode substrate for a liquid crystal display device, wmch i s configured b y forming a black m a trix, a transparent conductive film, and a resin layer o n a transparent substrate, wherein: the black matrix has a plurality o f openings, and i s formed : from a light-shielding layer in which light-shielding pigments are dispersed throughout a resin; and the resin layer i s formed o n the transparent substrate which i s provided with the black matrix and the transparent conductive film, and forms a convex section above the black matrix and a concave section o n the region which passes through the center o f the open ings o f the black matrix.

No. of Pages : 129 No. of Claims : 24

(12) PATENT APPLICATION PUBLICATION
(19) INDIA
(22) Date of filing of Application :29/11/2012
(21) Application No.10394/DELNP/2012 A
(43) Publication Date : 05/09/2014

(54) Title of the invention : NEW COMPOSITION AND USE THEREOF

(51) International classification :C08K3/00,C08L23/06,C08L23/10
(31) Priority Document No :10165493.7
(32) Priority Date :10/06/2010
(33) Name of priority country :EPO
(86) International Application No :PCT/EP2011/058936
Filing Date :31/05/2011
(87) International Publication No :WO 2011/154287
(61) Patent of Addition to Application Number :NA
Filing Date :NA
(62) Divisional to Application Number :NA
Filing Date :NA

(71)**Name of Applicant :**
1)Borealis AG
Address of Applicant :Wagramer Strasse 17 19 A 1220 Vienna Austria
(72)**Name of Inventor :**
1)STEFFL Thomas
2)FRIEL David
3)KLIMKE Katja
4)SVANBERG Christer

(57) Abstract :
The present invention relates to a new polymer composition suitable for a semiconductive devices. Moreover the present invention is related to a process for producing said composition as well as to a use of said composition. Further the invention is also related to an article preferably a cable comprising said composition.

No. of Pages : 36 No. of Claims : 19

(12) PATENT APPLICATION PUBLICATION
(21) Application No.10395/DELNP/2012 A
(19) INDIA
(22) Date of filing of Application :29/11/2012
(43) Publication Date : 05/09/2014

(54) Title of the invention : ACQUISITION OF 3D TOPOGRAPHIC IMAGES OF TOOL MARKS USING NON LINEAR PHOTOMETRIC STEREO METHOD

(51) International classification :G01B11/245
(31) Priority Document No :61/355241
(32) Priority Date :16/06/2010
(33) Name of priority country :U.S.A.
(86) International Application No :PCT/CA2011/050335
Filing Date :02/06/2011
(87) International Publication No :WO 2011/156919
(61) Patent of Addition to Application Number :NA
Filing Date :NA
(62) Divisional to Application Number :NA
Filing Date :NA

(71)**Name of Applicant :**
1)FORENSIC TECHNOLOGY WAI INC.
Address of Applicant :Suite 200 5757 Boul. Cavendish Montral Qubec H4W 2W8 Canada
(72)**Name of Inventor :**
1)L‰VESQUE Serge

(57) Abstract :
There is described a method and 3D image acquisition system for addressing the specular nature of metallic surfaces in general and ballistic pieces of evidence in particular using photometric stereo by identifying and solving a plurality of sets of non linear equations comprising a diffusive term and a specular term to determine a surface normal vector field N(x y) and using N(x y) to determine a 3D topography Z(x y).

No. of Pages : 43 No. of Claims : 20

(12) PATENT APPLICATION PUBLICATION
(19) INDIA
(22) Date of filing of Application :29/11/2012
(21) Application No.10396/DELNP/2012 A
(43) Publication Date : 05/09/2014

(54) Title of the invention : FURNITURE COMPONENT FASTENING APPARATUS FURNITURE SYSTEM AND METHOD OF ASSEMBLING FURNITURE FOR A WORK SPACE

(51) International classification :A47B13/00,F16B12/42
(31) Priority Document No :61/352468
(32) Priority Date :08/06/2010
(33) Name of priority country :U.S.A.
(86) International Application No :PCT/US2011/039065
Filing Date :03/06/2011
(87) International Publication No :WO 2011/156226
(61) Patent of Addition to Application Number :NA
Filing Date :NA
(62) Divisional to Application Number :NA
Filing Date :NA

(71)**Name of Applicant :**
1)KNOLL INC.
Address of Applicant :1235 Water Street East Greenville Pennsylvania 18041 U.S.A.
(72)**Name of Inventor :**
1)UDAGAWA Masamichi
2)MOESLINGER Sigrid
3)BULLWINKLE Wallace

(57) Abstract :
A furniture system method of assembling furniture for a work space and a fastening apparatus for interconnecting furniture components include one or more fastening devices. Each fastening device includes a body that has a channel sized and configured to receive a first rail. Each fastening device also includes at least one of a connector assembly and an opening formed in the body for attaching the fastening device to at least one other furniture component. The connector assembly and the opening in the body are sized and configured so that the other furniture components are positioned such that at least one of their height and length extend in a direction substantially perpendicular to the length of the first rail such as a direction that is mostly perpendicular to the length of the first rail. Other embodiments of the fastening device may include variations in configurations to the connector assembly or body

No. of Pages : 43 No. of Claims : 20

(12) PATENT APPLICATION PUBLICATION
(19) INDIA
(22) Date of filing of Application :29/11/2012
(21) Application No.10397/DELNP/2012 A
(43) Publication Date : 05/09/2014

(54) Title of the invention : ADSORBENT FOR FEED AND PRODUCTS PURIFICATION IN BENZENE SATURATION PROCESS

(51) International classification :C07C7/12,C07C15/04,B01J20/06
(31) Priority Document No :61/359908
(32) Priority Date :30/06/2010
(33) Name of priority country :U.S.A.
(86) International Application No :PCT/US2011/042276
Filing Date :29/06/2011
(87) International Publication No :WO 2012/012151
(61) Patent of Addition to Application Number :NA
Filing Date :NA
(62) Divisional to Application Number :NA
Filing Date :NA

(71)**Name of Applicant :**
1)UOP LLC
Address of Applicant :25 East Algonquin Road P.O. Box 5017 Des Plaines Illinois 60017 5017 U.S.A.
(72)**Name of Inventor :**
1)KANAZIREV Vladislav I.
2)GORAWARA Jayant K.
3)SULLIVAN Dana K.
4)ROSIN Richard R.

(57) Abstract :
The service life and deactivation rate of a benzene saturation catalyst is improved through use of a new sulfur guard bed containing a chloride additive. This sulfur guard bed which contains supported CuO material having an increased resistance to reduction shows such improvement. Thus the danger of run away reduction followed by a massive release of water and deactivation of an isomerization catalyst is practically eliminated. The fact that the guard bed material preserves the active metal phase copper in an active (oxide) form is an important advantage leading to very low sulfur content in the product stream. The sulfur capacity per unit weight of sorbent is also significantly increased making this sorbent a superior cost effective sulfur guard product. The guard bed is effective in treating mixed phase feed streams.

No. of Pages : 17 No. of Claims : 10

(12) PATENT APPLICATION PUBLICATION
(19) INDIA
(22) Date of filing of Application :29/11/2012

(21) Application No.10376/DELNP/2012 A
(43) Publication Date : 05/09/2014

(54) Title of the invention : COMPACT FUSION REACTOR

(51) International classification :G21B1/05,H05H1/12,H05H3/06
(31) Priority Document No :1009768.1
(32) Priority Date :11/06/2010
(33) Name of priority country :U.K.
(86) International Application No :PCT/GB2011/050990
Filing Date :26/05/2011
(87) International Publication No :WO 2011/154717
(61) Patent of Addition to Application Number :NA
Filing Date :NA
(62) Divisional to Application Number :NA
Filing Date :NA

(71)**Name of Applicant :**
1)TOKAMAK SOLUTIONS UK LIMITED
Address of Applicant :Culham Innovation Centre D5 Culham Science Centre Abingdon Oxfordshire OX14 3DB U.K.
(72)**Name of Inventor :**
1)SYKES Alan
2)GRYAZNEVICH Mikhail

(57) Abstract :
A compact nuclear fusion reactor for use as a neutron source is described. The reactor comprises a toroidal plasma chamber (34) and a plasma confinement system (31) arranged to generate a magnetic field for confining a plasma in the plasma chamber (34). The plasma confinement system (31) is configured so that a major radius of the confined plasma is 0.75 m or less. The reactor is configure to operate with a plasma current of 2 MA or less. The magnetic field includes a toroidal component of 5 T or less. Despite these low values the reactor can generate a neutron output of 1 MW or more.

No. of Pages : 32 No. of Claims : 41

(12) PATENT APPLICATION PUBLICATION
(21) Application No.10377/DELNP/2012 A
(19) INDIA
(22) Date of filing of Application :29/11/2012
(43) Publication Date : 05/09/2014

(54) Title of the invention : COMPONENT HAVING REDUCED METAL ADHESION

(51) International classification :B22F3/10
(31) Priority Document No :A 946/2010
(32) Priority Date :10/06/2010
(33) Name of priority country :Austria
(86) International Application No :PCT/AT2011/000259
Filing Date :09/06/2011
(87) International Publication No :WO 2011/153573
(61) Patent of Addition to Application Number :NA
Filing Date :NA
(62) Divisional to Application Number :NA
Filing Date :NA

(71)**Name of Applicant :**
1)MIBA SINTER AUSTRIA GMBH
Address of Applicant :Dr. Mitterbauer Strasse 3 A 4663 Laakirchen Austria
(72)**Name of Inventor :**
1)STETINA Gerold
2)GRAFINGER Matthias
3)REISNER Martin

(57) Abstract :
The invention relates to an assembly (I) having at least two metallic components (2, 3) which are subject to sliding stress and each have a sliding surface and in operation slide against one another, wherein at least one of the components (2, 3) consists of a metallic sintered material having an iron-based matrix containing iron together with carbon and up to 10% by weight of at least one non-ferrous metal at least in the region of the sliding stress, where the carbon 10 content is at least I% by weight and not more than 10% by weight and at least part of the carbon is present in unbound particulate form in the matrix.

No. of Pages : 23 No. of Claims : 18

(12) PATENT APPLICATION PUBLICATION
(21) Application No.10378/DELNP/2012 A
(19) INDIA
(22) Date of filing of Application :29/11/2012
(43) Publication Date : 05/09/2014

(54) Title of the invention : PELTON TURBINE HAVING A WATER DRAIN SYSTEM

(51) International classification :F03B1/04
(31) Priority Document No :10 2010 024 475.9
(32) Priority Date :21/06/2010
(33) Name of priority country :Germany
(86) International Application No :PCT/EP2011/002067
Filing Date :21/04/2011
(87) International Publication No :WO 2011/160742
(61) Patent of Addition to Application Number :NA
Filing Date :NA
(62) Divisional to Application Number :NA
Filing Date :NA

(71)**Name of Applicant :**
1)VOITH PATENT GMBH
Address of Applicant :St. Pltener Strae 43 89522 Heidenheim Germany
(72)**Name of Inventor :**
1)MACK Reiner
2)ROHNE Wolfgang

(57) Abstract :
The invention relates to a Pelton turbine comprising a blade wheel which carries a number of Pelton buckets on its circumference; comprising two or more nozzle bodies for applying a water jet to the Pelton buckets; 10 a guide wall which is annular in relation to the rotational axis and is provided for discharging spray water is disposed on each side of the blade wheel and radially outside of the Pelton buckets; the guide wall comprises openings for accommodating one respective nozzle body; 15 each nozzle body extends with its orifice at least up to the inner radius of the guide wall. 13

No. of Pages : 13 No. of Claims : 6

(12) PATENT APPLICATION PUBLICATION
(19) INDIA
(22) Date of filing of Application :29/11/2012
(21) Application No.10379/DELNP/2012 A
(43) Publication Date : 05/09/2014

(54) Title of the invention : LINEAR HOLLOW SPOOL VALVE

(51) International classification :F16K11/07,F16K31/122
(31) Priority Document No :12/821167
(32) Priority Date :23/06/2010
(33) Name of priority country :U.S.A.
(86) International Application No :PCT/US2011/039077
Filing Date :03/06/2011
(87) International Publication No :WO 2011/162929
(61) Patent of Addition to Application Number :NA
Filing Date :NA
(62) Divisional to Application Number :NA
Filing Date :NA

(71)**Name of Applicant :**
1)GENERAL ELECTRIC COMPANY
Address of Applicant :One River Road Schenectady NY 12345 U.S.A.
(72)**Name of Inventor :**
1)ANDERSON Todd Alan
2)SHAH Manoj Ramprasad
3)BEAUCHAMP Philip Paul
4)KALLURI Rammohan Rao
5)BHAT Suma Memaria Narayana
6)KOMMEPALLI Hareesh Kumar Reddy

(57) Abstract :
A valve system (200) for pressure exchanger tubes of an energy recovery system (100) is provided The valve system includes a valve housing (304) a flow distributor (310) a hollow spool (302) and a sealing system The valve housing may comprise a set of high pressure ports (306) and a set of low pressure ports (308). The flow distributor allows the flow to and from the set of high pressure ports and the set of low pressure ports within the valve housing The hollow spool may be configured to reciprocate axially in a radial clearance between the valve housing and the flow distributor. The hollow spool may connect the pressure exchanger tube in fluid communication with the high pressure ports or the low pressure ports. The sealing system may be provided within the valve housing for imparting substantial hydraulic balance to the hollow spool.

No. of Pages : 23 No. of Claims : 21

(12) PATENT APPLICATION PUBLICATION
(19) INDIA
(22) Date of filing of Application :29/11/2012
(21) Application No.10380/DELNP/2012 A
(43) Publication Date : 05/09/2014

(54) Title of the invention : ACTIVE PROSPECTIVE INTELLIGENT MONITORING METHOD FOR LIQUID FILM AND DEVICE THEREOF

(51) International classification :B41M1/14,B05C5/00,G03F7/16
(31) Priority Document No :NA
(32) Priority Date :NA
(33) Name of priority country :NA
(86) International Application No:PCT/CN2010/000765
Filing Date :28/05/2010
(87) International Publication No :WO 2011/147053
(61) Patent of Addition to Application Number :NA
Filing Date :NA
(62) Divisional to Application Number :NA
Filing Date :NA

(71)**Name of Applicant :**
1)YAN Tak Kin Andrew
Address of Applicant :Hong Kong Office: 3/F. Block 1 Leader Ind. Ctr. 188 202 Texaco Road Tsuen Wan N.T. Hong Kong China
(72)**Name of Inventor :**
1)YAN Tak Kin Andrew

(57) Abstract :
AN ACTIVE PROSPECTIVE INTELLIGENT MONITORING METHOD AND DEVICE THEREOF THROUGH MEASURING LIQUID FILM TO CONTROL A PRODUCTION SYSTEM IN THE PROCESS OF GRINDING MATERIALS TO MAKE LIQUID ARE PROVIDED. THE METHOD INCLUDES ACTUATING A RESERVOIR TO OUTPUT RAW MATERIALS TO A GRINDING SYSTEM (52) FOR AVERAGE GRINDING TO MAKE FILMS, AND PASSING THROUGH A SAMPLING ROTATION SHAFT (9); OPERATING A MONITOR (5) TO MEASURE THE FILMS ON THE SAMPLING ROTATION SHAFT (9), OBTAINING DATA INFORMATION AND SENDING IT TO AN ANALYSIS INSTRUMENT (6), FOR COMPARING IT WITH SET LIQUID FILM REFERENCE TARGET; TRANSMITTING A FILM MODIFIED VALUE IN REAL TIME TO A PRODUCING APPARATUS CONSOLE (7) THROUGH THE ANALYSIS INSTRUMENT (6), AND CONTROLLING THE FEEDING OF THE RESERVOIR BY THE RAW MATERIALS GRINDING PRODUCTION SYSTEM, IN ORDER TO MODIFY THE THICKNESS OF THE PRODUCED FILM CIRCULARLY AND REPEATEDLY. THE DEVICE IS COMPOSED OF A MONITOR (5), A SAMPLING ROTATION SHAFT (9), A DATA CONVERSION SYSTEM, A REFERENCE COMPARING SYSTEM AND A PRODUCTION CONTROL SYSTEM. THE METHOD AND DEVICE CAN BE USED IN THE PRINT INDUSTRY AND OTHERS, IN ORDER TO ACHIEVE BEST PAINT WEIGHT AND MINIMUM TOLERANCE ERROR, HIGHLY EXACTLY MONITOR PRODUCING PRODUCTS WITH GOOD QUALITY, AND REDUCE LOSS OF TIME AND MATERIALS.

No. of Pages : 35 No. of Claims : 19

(12) PATENT APPLICATION PUBLICATION
(21) Application No.10402/DELNP/2012 A
(19) INDIA
(22) Date of filing of Application :29/11/2012
(43) Publication Date : 05/09/2014

(54) Title of the invention : METHOD AND SYSTEM FOR IMPROVED INTERFERENCE CANCELLATION BY PATH SELECTION

(51) International classification :H04B1/707
(31) Priority Document No :NA
(32) Priority Date :NA
(33) Name of priority country :NA
(86) International Application No :PCT/SE2010/050994
Filing Date :16/09/2010
(87) International Publication No :WO 2012/036603
(61) Patent of Addition to Application Number :NA
Filing Date :NA
(62) Divisional to Application Number :NA
Filing Date :NA

(71)**Name of Applicant :**
1)ZTE WISTRON TELECOM AB
Address of Applicant :19tr Kista Science Tower Frgatan 33 S 164 51 Kista Sweden
(72)**Name of Inventor :**
1)GRUBECK Hans

(57) Abstract :
The present invention discloses method and system for improving performance of interference cancellation in a radio communication system. The method comprises: estimating power of an interfering signal contained in a received signal; estimating power of an additive estimate error signal added to the interfering signal; and canceling the interfering signal from the received signal if the estimated power of the additive estimate error signal is lower than the estimated power of the interfering signal. A cellular mobile terminal and a cellular base station comprising the system are also disclosed.

No. of Pages : 20 No. of Claims : 20

(12) PATENT APPLICATION PUBLICATION
(19) INDIA
(22) Date of filing of Application :29/11/2012
(21) Application No.10403/DELNP/2012 A
(43) Publication Date : 05/09/2014

(54) Title of the invention : MEMBRANE SUITABLE FOR BLOOD FILTRATION

(51) International classification :B01D71/56,B01D67/00,B01D69/10
(31) Priority Document No :10164875.6
(32) Priority Date :03/06/2010
(33) Name of priority country:EPO
(86) International Application No :PCT/EP2011/058921
Filing Date :31/05/2011
(87) International Publication No :WO 2011/151314
(61) Patent of Addition to Application Number :NA
Filing Date :NA
(62) Divisional to Application Number :NA
Filing Date :NA

(71)**Name of Applicant :**
1)DSM IP Assets B.V.
Address of Applicant :Het Overloon 1 NL 6411 TE Heerlen Netherlands
(72)**Name of Inventor :**
1)DULLAERT Konraad
2)DORSCHU Marko
3)QIU Jun
4)THIES Jens Christoph

(57) Abstract :
The invention relates to a membrane construction comprising multiple layers wherein at least one of the layers is a nanoweb made of polymeric nanofibers wherein the mean flow pore size of the nanoweb is in the range from 50 nm to 5 µm wherein the number average diameter of the nanofibers is in the range from 100 to 600 nm wherein the basis weight of the nanoweb is in the range from 1 to 20 g/m wherein the porosity of the nanoweb is in the range from 60 to 95% wherein at least one of the layers is a support layer and wherein the nanoweb is hydrophilic.

No. of Pages : 30 No. of Claims : 15

(12) PATENT APPLICATION PUBLICATION
(19) INDIA
(22) Date of filing of Application :29/11/2012
(21) Application No.10404/DELNP/2012 A
(43) Publication Date : 05/09/2014

(54) Title of the invention : INORGANIC OXIDE COATING

(51) International classification :C09D183/14,C03C17/00,G02B1/11
(31) Priority Document No :10166452.2
(32) Priority Date :18/06/2010
(33) Name of priority country :EPO
(86) International Application No :PCT/EP2011/060106
Filing Date :17/06/2011
(87) International Publication No :WO 2011/157820
(61) Patent of Addition to Application Number :NA
Filing Date :NA
(62) Divisional to Application Number :NA
Filing Date :NA

(71)**Name of Applicant :**
1)DSM IP Assets B.V.
Address of Applicant :Het Overloon 1 NL 6411 TE Heerlen Netherlands
(72)**Name of Inventor :**
1)ARFSTEN Nanning Joerg
2)BUSKENS Pascal Jozef Paul
3)HABETS Roberto Arnoldus Dominicus Maria

(57) Abstract :
The invention relates to a coating composition comprising an inorganic oxide precursor A based on at least one inorganic element A selected from the group consisting of aluminum silicium titanium zirconium niobium indium tin antimony tantalum and bismuth; and an inorganic oxide precursor B based on at least one inorganic element B selected from the group consisting of scandium yttrium lanthanum and the lanthanoids; wherein A and B are capable of forming a mixed inorganic oxide. A coating made from this composition shows enhanced resistance to hydrolysis. The invention also relates to a process for applying a coating on a substrate using such composition more specifically to a liquid coating composition for use in a process of applying an anti reflective coating on transparent substrate; to a coated substrate obtained with such process and to an article like a solar panel comprising such coated substrate.

No. of Pages : 27 No. of Claims : 18

(12) PATENT APPLICATION PUBLICATION
(19) INDIA
(22) Date of filing of Application :29/11/2012
(21) Application No.10406/DELNP/2012 A
(43) Publication Date : 05/09/2014

(54) Title of the invention : CYCLOPROPYL DICARBOXAMIDES AND ANALOGS EXHIBITING ANTI CANCER AND ANTI PROLIFERATIVE ACTIVITES

(51) International classification :A61K31/44,A61K31/505,C07D213/75
(31) Priority Document No:61/329548
(32) Priority Date :29/04/2010
(33) Name of priority country :U.S.A.
(86) International Application No :PCT/US2011/034556
Filing Date :29/04/2011
(87) International Publication No :WO 2011/137342
(61) Patent of Addition to Application Number :NA
Filing Date :NA
(62) Divisional to Application Number :NA
Filing Date :NA

(71)**Name of Applicant :**
1)DECIPHERA PHARMACEUTICALS LLC
Address of Applicant :643 Massachusetts Suite 200 Lawrence Kansas 66044 U.S.A.
(72)**Name of Inventor :**
1)FLYNN Daniel L.
2)KAUFMAN Michael D.

(57) Abstract :
The disclosed compounds are useful in the treatment of mammalian cancers and especially human cancers.
Compounds pharmaceutical compositions and methods of Formula I are disclosed: Formula I or a pharmaceutically acceptable salt hydrate solvate enantiomer stereoisomer or tautomer thereof.

No. of Pages : 67 No. of Claims : 27

(12) PATENT APPLICATION PUBLICATION
(19) INDIA
(22) Date of filing of Application :29/11/2012

(21) Application No.10407/DELNP/2012 A
(43) Publication Date : 05/09/2014

(54) Title of the invention : VEHICLE WHEEL

(51) International classification :B60B11/06,B60B25/10,B60B25/22
(31) Priority Document No :1009124.7
(32) Priority Date :01/06/2010
(33) Name of priority country :U.K.
(86) International Application No :PCT/GB2011/051032
Filing Date :01/06/2011
(87) International Publication No :WO 2011/151644
(61) Patent of Addition to Application Number :NA
Filing Date :NA
(62) Divisional to Application Number :NA
Filing Date :NA

(71)**Name of Applicant :**
1)GKN LAND SYSTEMS LIMITED
Address of Applicant :PO Box 85 Hadley Castle Works Telford Shropshire TF1 4RE U.K.
(72)**Name of Inventor :**
1)CRAGG Stephen Richard

(57) Abstract :
A wheel for a vehicle including a rim (10) having axially spaced support portions (12 14) on which respective annular tyre supporting elements (34 36) are engageable; wherein one of the support portions is of] arger diameter than the other.

No. of Pages : 17 No. of Claims : 9

(12) PATENT APPLICATION PUBLICATION
(19) INDIA
(22) Date of filing of Application :29/11/2012
(21) Application No.10408/DELNP/2012 A
(43) Publication Date : 05/09/2014

(54) Title of the invention : CARRIER LINK CONVEYOR CHAIN COMPRISING A PLURALITY OF CARRIER LINKS AND A MATERIAL HANDLING SYSTEM COMPRISING A PLURALITY OF CONVEYOR CHAINS

(51) International classification :B65G17/20,B65G17/40,B65G47/61
(31) Priority Document No :10505584
(32) Priority Date :02/06/2010
(33) Name of priority country:Sweden
(86) International Application No :PCT/SE2011/050672
Filing Date :30/05/2011
(87) International Publication No :WO 2011/152785
(61) Patent of Addition to Application Number :NA
Filing Date :NA
(62) Divisional to Application Number :NA
Filing Date :NA

(71)**Name of Applicant :**
1)ETON SYSTEM AB
Address of Applicant :Djupadal S 507 71 Gnghester Sweden
(72)**Name of Inventor :**
1)DAVIDSON Dan

(57) Abstract :
The invention relates to a carrier link of a conveyor chain intended to convey hanging product carriers which comprises two parallel walls connected by a partition wall and an opening in which a chain lock is positioned where the chain lock can assume an open state and a closed state and where the chain lock comprises two locking arms each with a locking lug where the locking lugs are intended to secure an object in the central opening such that the product carrier bears against the two locking lugs when the product carrier is conveyed hanging from the carrier link. The invention further relates to a conveyor chain comprising a plurality of carrier links and a material handling system comprising a plurality of conveyor chains. The aim of the invention is to obtain a more secure carrier link which permits a controlled and traceable flow and which additionally has a higher loading capacity.

No. of Pages : 28 No. of Claims : 11

(12) PATENT APPLICATION PUBLICATION
(19) INDIA
(22) Date of filing of Application :29/11/2012

(21) Application No.10410/DELNP/2012 A
(43) Publication Date : 05/09/2014

(54) Title of the invention : LEAK DETECTOR

(51) International classification :G01M3/04
(31) Priority Document No :1009042.1
(32) Priority Date :01/06/2010
(33) Name of priority country :U.K.
(86) International Application No :PCT/GB2011/051027
Filing Date :31/05/2011
(87) International Publication No :WO 2011/151643
(61) Patent of Addition to Application Number :NA
Filing Date :NA
(62) Divisional to Application Number :NA
Filing Date :NA

(71)**Name of Applicant :**
1)DUNLOP OIL & MARINE LIMITED
Address of Applicant :Moody Lane Pyewipe Grimsby DN31 2SP U.K.
(72)**Name of Inventor :**
1)ZANDIYEH Ali Reza Kambiez
2)STATON Paul

(57) Abstract :
A leak detecting sensor device (120) for a hose section (105) comprises a sensor(145a b).The sensor (145a b) comprises an optical fibre arranged to react to the presence of a fluid. The sensor (145a b) is housed in a protective sleeve that is arranged for expansion and contraction when the hose section (105) expands and contracts respectively. Tension means connects a first end of the sensor to the protective sleeve and is arranged to tension the sensor within the sleeve.

No. of Pages : 22 No. of Claims : 15

(12) PATENT APPLICATION PUBLICATION
(19) INDIA
(22) Date of filing of Application :29/11/2012
(21) Application No.10412/DELNP/2012 A
(43) Publication Date : 05/09/2014

(54) Title of the invention : SEPARATING MINED MATERIAL

(51) International classification :B07B13/00,B07C5/00
(31) Priority Document No :2010902419
(32) Priority Date :02/06/2010
(33) Name of priority country :Australia
(86) International Application No :PCT/AU2011/000691
Filing Date :02/06/2011
(87) International Publication No :WO 2011/150464
(61) Patent of Addition to Application Number :NA
Filing Date :NA
(62) Divisional to Application Number :NA
Filing Date :NA

(71)**Name of Applicant :**
1)TECHNOLOGICAL RESOURCES PTY. LIMITED
Address of Applicant :120 Collins Street Melbourne Victoria 3000 Australia
(72)**Name of Inventor :**
1)BOX John Clarence
2)PAINTER Carly Louise

(57) Abstract :
A method of separating a mined material that comprises assessing the grade of successive segments of the mined material and separating each segment on the basis of grade into a category that is at or above a grade threshold or a category that is below the grade threshold. An apparatus is also disclosed.

No. of Pages : 34 No. of Claims : 30

(12) PATENT APPLICATION PUBLICATION
(19) INDIA
(22) Date of filing of Application :29/11/2012
(21) Application No.10413/DELNP/2012 A
(43) Publication Date : 05/09/2014

(54) Title of the invention : METHOD FOR PREPARING A NON IONIC SURFACTANT STABLE PERSONAL CARE DISPERSION

(51) International classification :B01F17/18,A61K8/81
(31) Priority Document No :61/352977
(32) Priority Date :09/06/2010
(33) Name of priority country :U.S.A.
(86) International Application No :PCT/US2011/039720
Filing Date :09/06/2011
(87) International Publication No :WO 2011/156551
(61) Patent of Addition to Application Number :NA
Filing Date :NA
(62) Divisional to Application Number :NA
Filing Date :NA

(71)**Name of Applicant :**
1)THE PROCTER & GAMBLE COMPANY
Address of Applicant :One Procter & Gamble Plaza Cincinnati Ohio 45202 U.S.A.
(72)**Name of Inventor :**
1)ROYCE Douglas Allan
2)WANING Gregory Thomas
3)LINDBERG Seth Edward
4)BROWN Mark Anthony
5)PIATT David Michael

(57) Abstract :
Disclosed herein are methods for preparing dispersions containing small diameter liquid crystals of a high charge density cationic polymer and a detersive surfactant. Also disclosed herein are uses of these dispersions to prepare personal care products and liquid cleansing products.

No. of Pages : 62 No. of Claims : 15

(12) PATENT APPLICATION PUBLICATION
(21) Application No.10414/DELNP/2012 A
(19) INDIA
(22) Date of filing of Application :29/11/2012
(43) Publication Date : 05/09/2014

(54) Title of the invention : SEMI CONTINUOUS FEED PRODUCTION OF LIQUID PERSONAL CARE COMPOSITIONS

(51) International classification :B01F5/06,B01F5/04
(31) Priority Document No :61/353026
(32) Priority Date :09/06/2010
(33) Name of priority country :U.S.A.
(86) International Application No :PCT/US2011/039767
Filing Date :09/06/2011
(87) International Publication No :WO 2011/156576
(61) Patent of Addition to Application Number :NA
Filing Date :NA
(62) Divisional to Application Number :NA
Filing Date :NA

(71)**Name of Applicant :**
1)THE PROCTER & GAMBLE COMPANY
Address of Applicant :One Procter & Gamble Plaza Cincinnati Ohio 45202 U.S.A.
(72)**Name of Inventor :**
1)BERGER Jason Andrew
2)DUNLOP David Scott
3)YANG Yunpeng
4)ROYCE Douglas Allan
5)KNAPEK Dawn Renee

(57) Abstract :
A mixing assembly (10) for use in a semi continuous process for producing liquid personal care compositions such as shampoos includes a main feed tube (12) carrying a base of the composition to be produced a plurality of injection tubes (14 16 18 20 22) in selective fluid communication with the main feed tube (12) and an orifice provided in a wall at an end of the main feed tube downstream of the plurality of injection tubes. The wall in which the orifice is provided includes a curved (e.g. semispherical) entry surface on an upstream or inlet side of an orifice and a curved (e.g. semi elliptical) exit surface on a downstream or outlet side of the orifice. The orifice may have a rectangular or elliptical shape. By maintaining symmetry of the injection tubes with respect to the orifice and leveraging delay between introduction of dosed modules and increased viscosity effective mixing may be achieved with minimal energy.

No. of Pages : 48 No. of Claims : 15

(12) PATENT APPLICATION PUBLICATION
(19) INDIA
(22) Date of filing of Application :29/11/2012
(21) Application No.10415/DELNP/2012 A
(43) Publication Date : 05/09/2014

(54) Title of the invention : A FLEXIBLE PIPE SYSTEM

(51) International classification :B63B27/34,B63B27/24,E21B17/01
(31) Priority Document No :PA 2010 00478
(32) Priority Date :04/06/2010
(33) Name of priority country :Denmark
(86) International Application No :PCT/DK2011/050198
Filing Date :06/06/2011
(87) International Publication No :WO 2011/150945
(61) Patent of Addition to Application Number :NA
Filing Date :NA
(62) Divisional to Application Number :NA
Filing Date :NA

(71)**Name of Applicant :**
1)NATIONAL OILWELL VARCO DENMARK I/S
Address of Applicant :Priorparken 480 DK 2605 Br¸ndby Denmark
(72)**Name of Inventor :**
1)PEDERSEN Tommy
2)CHRISTENSEN Claus Dencker

(57) Abstract :
A flexible pipe system for transferring fluid between a seabed installation (7) and a sea surface installation (6). The flexible pipe system comprises a fixed subsea structure (2) with a support section (3) and a flexible transporting unit (1) with an axis along a length thereof a sea surface end (4) and a seabed end (5) arranged with a horizontal distance and a vertical distance. The sea surface end (4) is connected to the sea surface installation (6) and the seabed end (5) is the touchdown point on the seabed of the flexible transporting unit (1) or the point along the flexible transporting unit (1) where it is connected to the seabed installation (7) which ever has the shorter horizontal distance to the sea surface end (4). The flexible transporting unit (1) is supported by the support section (3) of the fixed subsea structure (2) at a flexible pipe supporting area (1a) defining a flexible transporting unit sea surface length (1b) extending along the flexible transporting unit (1) from its sea surface end (4) to the flexible pipe supporting area (1a). At least a section of the flexible transporting unit (1) is movable along the axis with respect to the support section (3) of the fixed subsea structure (2) such that the flexible transporting unit sea surface length (1b) can very between a minimum and a maximum length.

No. of Pages : 46 No. of Claims : 50

(12) PATENT APPLICATION PUBLICATION
(19) INDIA
(22) Date of filing of Application :23/11/2012
(21) Application No.10205/DELNP/2012 A
(43) Publication Date : 05/09/2014

(54) Title of the invention : METHOD FOR APPLICATION OF STRUCTURAL MATERIALS

(51) International classification :B29C44/12,B29C37/00,B29C65/00
(31) Priority Document No :61/347067
(32) Priority Date :21/05/2010
(33) Name of priority country :U.S.A.
(86) International Application No :PCT/US2011/037271
Filing Date :20/05/2011
(87) International Publication No :WO 2011/146793
(61) Patent of Addition to Application Number :NA
Filing Date :NA
(62) Divisional to Application Number :NA
Filing Date :NA

(71)**Name of Applicant :**
1)ZEPHYROS, INC.
Address of Applicant :160 Mclean Drive Romeo MI 48065 U.S.A.
(72)**Name of Inventor :**
1)RICHARDSON Henry E.
2)MOORE Patrick

(57) Abstract :
There is disclosed a method of applying activatable materia! to a member of an atticie of manufacture such as an automotive vehicle. According to the method the activatable material is provided to an applicator followed by applying the activatable material to the member wherein the activatable material is attached by way of a mechanical interlock via one or more through holes.

No. of Pages : 29 No. of Claims : 20

(12) PATENT APPLICATION PUBLICATION
(19) INDIA
(22) Date of filing of Application :23/11/2012
(21) Application No.10206/DELNP/2012 A
(43) Publication Date : 05/09/2014

(54) Title of the invention : ANTI VIRAL COMPOUNDS

(51) International classification	:A61K31/10,A61K31/095,A61K31/255
(31) Priority Document No	:61/327,536
(32) Priority Date	:23/04/2010
(33) Name of priority country	:U.S.A.
(86) International Application No Filing Date	:PCT/US2011/033314 :20/04/2011
(87) International Publication No	:WO 2011/133712
(61) Patent of Addition to Application Number Filing Date	:NA :NA
(62) Divisional to Application Number Filing Date	:NA :NA

(71)**Name of Applicant :**
1)KINETA INC.
Address of Applicant :219 Terry Avenue North Suite 300 Seattle WA 98109 5208 U.S.A.
(72)**Name of Inventor :**
1)IADONATO Shawn P.
2)BEDARD Kristin

(57) Abstract :
Disclosed herein are compounds and related compositions for the treatment of viral infection including RNA viral infection and compounds that can modulate the RIG I pathway in vertebrate cells including compounds that can activate the RIG I pathway.

No. of Pages : 86 No. of Claims : 20

(12) PATENT APPLICATION PUBLICATION
(19) INDIA
(22) Date of filing of Application :23/11/2012
(21) Application No.10207/DELNP/2012 A
(43) Publication Date : 05/09/2014

(54) Title of the invention : ANTI VIRAL COMPOUNDS

(51) International classification :A61K31/5375,A61K31/4418,A61K31/433
(31) Priority Document No :61/327,558
(32) Priority Date :23/04/2010
(33) Name of priority country :U.S.A.
(86) International Application No :PCT/US2011/033334
Filing Date :20/04/2011
(87) International Publication No :WO 2011/133727
(61) Patent of Addition to Application Number :NA
Filing Date :NA
(62) Divisional to Application Number :NA
Filing Date :NA

(71)**Name of Applicant :**
1)KINETA INC.
Address of Applicant :219 Terry Avenue North Suite 300 Seattle WA 98109 5208 U.S.A.
(72)**Name of Inventor :**
1)IADONATO Shawn P.
2)BEDARD Kristin

(57) Abstract :
Disclosed herein are compounds and related compositions for the treatment of viral infection including RNA viral infection and compounds that can modulate the RIG I pathway in vertebrate cells including compounds that can activate the RIG I pathway.

No. of Pages : 66 No. of Claims : 17

(12) PATENT APPLICATION PUBLICATION
(19) INDIA
(22) Date of filing of Application :23/11/2012
(21) Application No.10208/DELNP/2012 A
(43) Publication Date : 05/09/2014

(54) Title of the invention : MYCOTOXIN BINDER

(51) International classification :A23L3/3463
(31) Priority Document No :61/345,186
(32) Priority Date :17/05/2010
(33) Name of priority country :U.S.A.
(86) International Application No :PCT/US2011/036809
Filing Date :17/05/2011
(87) International Publication No :WO 2011/146485
(61) Patent of Addition to Application Number :NA
Filing Date :NA
(62) Divisional to Application Number :NA
Filing Date :NA

(71)**Name of Applicant :**
1)KEMIN INDUSTRIES INC.
Address of Applicant :2100 Maury Street Des Moines Iowa 50317 U.S.A.
(72)**Name of Inventor :**
1)SCHOETERS Elke
2)LI Zheng
3)VAN DYCK Stefaan
4)LAO Ye

(57) Abstract :
A mycotoxin binder is disclosed characterized by 45% or more humic acid maximum solubility of 20% at pH between 1.5 and 7.0 and an in vitro mycotoxin binding efficiency of at least 80% and preferably 90% with adsorption of at least 85% at pH 3.0 and desorption less than 10% at pH 6.8.

No. of Pages : 60 No. of Claims : 4

(12) PATENT APPLICATION PUBLICATION
(19) INDIA
(22) Date of filing of Application :23/11/2012
(21) Application No.10209/DELNP/2012 A
(43) Publication Date : 05/09/2014

(54) Title of the invention : REMOVABLE SHIM CLIP FOR ADJUSTABLE PISTON PUMP

(51) International classification :F04B53/00,F04B39/00,F04B9/04
(31) Priority Document No :61/346,287
(32) Priority Date :19/05/2010
(33) Name of priority country :U.S.A.
(86) International Application No :PCT/US2011/000893
Filing Date :19/05/2011
(87) International Publication No :WO 2011/146125
(61) Patent of Addition to Application Number :NA
Filing Date :NA
(62) Divisional to Application Number :NA
Filing Date :NA

(71)**Name of Applicant :**
1)GRACO MINNESOTA INC.
Address of Applicant :88 11th Avenue NE Minneapolis MN 55413 U.S.A.
(72)**Name of Inventor :**
1)CELOTTA Daniel W.
2)HOLMAN John C.

(57) Abstract :
A pump assembly comprises a base a cam a cylinder a piston and a shim clip. The cam rotates about a rotational axis with respect to the base. The cylinder attaches to the base and has an inlet port and an outlet for fluid. The piston is reciprocally driven by rotation of the cam to draw fluid into the cylinder through the inlet port during a fill stroke and to close the inlet port and pump fluid in the cylinder toward the offset during a pump stroke. The shim clip is removably insertable between the cylinder and the base to increase the distance between the inlet port and the rotational axis.

No. of Pages : 13 No. of Claims : 18

(12) PATENT APPLICATION PUBLICATION
(19) INDIA
(22) Date of filing of Application :30/11/2012
(21) Application No.10438/DELNP/2012 A
(43) Publication Date : 05/09/2014

(54) Title of the invention : SEAWATER DESALINATION PLANT AND PRODUCTION OF HIGH PURITY SALT

(51) International classification :C02F9/00,B01D61/02,B01D61/04
(31) Priority Document No :12/815711
(32) Priority Date :15/06/2010
(33) Name of priority country :U.S.A.
(86) International Application No :PCT/US2011/040412
Filing Date :15/06/2011
(87) International Publication No :WO 2011/159743
(61) Patent of Addition to Application Number :NA
Filing Date :NA
(62) Divisional to Application Number :NA
Filing Date :NA

(71)**Name of Applicant :**
1)GENERAL ELECTRIC COMPANY
Address of Applicant :1 River Road Schenectady NY 12345 U.S.A.
(72)**Name of Inventor :**
1)MOR Luca
2)ELYANOW Irving
3)RADICE Giovanni
4)CHIAPPA Giuseppe
5)VORA Nishith

(57) Abstract :
The present invention discloses an integrated desalination and salt plant for the production of a salt or slurry product of high purity. The reject stream from the desalination plant is used as the feed stream for the salt plant. The salt plant feed stream is filtered to effectively remove sulfate which prevents scale formation in the salt plant equipment. The filtering may also reduce the level of calcium magnesium bicarbonate or other components of the feed which may also prevent scale formation in the salt plant equipment. The salt plant produces a high purity salt product without the use of chemical purification.

No. of Pages : 17 No. of Claims : 20

(12) PATENT APPLICATION PUBLICATION
(19) INDIA
(22) Date of filing of Application :30/11/2012
(21) Application No.10441/DELNP/2012 A
(43) Publication Date : 05/09/2014

(54) Title of the invention : ANTIBODIES AGAINST EPIDERMAL GROWTH FACTOR RECEPTOR (EGFR) AND USES THEREOF

(51) International classification :A61K39/395
(31) Priority Document No :61/331093
(32) Priority Date :04/05/2010
(33) Name of priority country :U.S.A.
(86) International Application No :PCT/US2011/035238
Filing Date :04/05/2011
(87) International Publication No :WO 2011/140254
(61) Patent of Addition to Application Number :NA
Filing Date :NA
(62) Divisional to Application Number :NA
Filing Date :NA

(71)**Name of Applicant :**
1)MERRIMACK PHARMACEUTICALS INC.
Address of Applicant :One Kendall Square Suite B7201 Cambridge MA 02139 U.S.A.
(72)**Name of Inventor :**
1)BUKHALID Raghida
2)FELDHAUS Michael
3)KING Anne
4)KOHLI Neeraj
5)KRAULAND Eric
6)NIELSEN Ulrik

(57) Abstract :
Anti EGFR antibodies therapeutic compositions comprising combinations of anti EGFR antibodies as well as methods for using such antibodies and compositions to treat EGFR related disorders (e.g. cancers) are disclosed.

No. of Pages : 182 No. of Claims : 26

(12) PATENT APPLICATION PUBLICATION
(19) INDIA
(22) Date of filing of Application :23/11/2012
(21) Application No.10225/DELNP/2012 A
(43) Publication Date : 05/09/2014

(54) Title of the invention : PROCESS FOR PRODUCING TEREPHTHALIC ACID

(51) International classification :C07C51/21,C07C63/26,C07C51/43
(31) Priority Document No :61/360,228
(32) Priority Date :30/06/2010
(33) Name of priority country :U.S.A.
(86) International Application No :PCT/US2011/040601
Filing Date :16/06/2011
(87) International Publication No :WO 2012/012047
(61) Patent of Addition to Application Number :NA
Filing Date :NA
(62) Divisional to Application Number :NA
Filing Date :NA

(71)**Name of Applicant :**
1)UOP LLC
Address of Applicant :25 East Algonquin Road P. O. Box 5017 Des Plaines Illinois 60017 5017 U.S.A.
2)BORESKOV INSTITUTE OF CATALYSIS
(72)**Name of Inventor :**
1)BHATTACHARYYA Alakananda
2)KOCAL Joseph A.
3)WALENGA Joel T.
4)ADONIN Nikolay Y.
5)KUZNETSOVA Nina I.
6)BALZHINIMAEV Bair S.

(57) Abstract :
A solid terephthalic acid composition and a process for producing terephthalic acid from para xylene. The process comprises forming a mixture comprising the para xylene a solvent a bromine source and a catalyst; and oxidizing the para xylene by contacting the mixture with an oxidizing agent at oxidizing conditions to produce a solid oxidation product comprising terephthalic acid para toluic acid 4 carboxybenzaldehyde. The solvent comprises a carboxylic acid having from 1 to 7 carbon atoms and an dialkyl imidazolium ionic liquid; and the catalyst comprises at least one of
cobalt titanium manganese chromium copper nickel vanadium iron molybdenum tin cerium and zirconium. The solid terephthalic acid composition comprises less than about 4 000 ppm wt 4 carboxybenzaldehyde content and more than about 2 000 ppm wt a para toluic acid.

No. of Pages : 22 No. of Claims : 10

(12) PATENT APPLICATION PUBLICATION
(21) Application No.10445/DELNP/2012 A
(19) INDIA
(22) Date of filing of Application :30/11/2012
(43) Publication Date : 05/09/2014

(54) Title of the invention : DRIVE FOR RAIL VEHICLES

(51) International classification :B61C9/50
(31) Priority Document No :10 2010 020 981.3
(32) Priority Date :12/05/2010
(33) Name of priority country :Germany
(86) International Application No :PCT/EP2011/057612
Filing Date :11/05/2011
(87) International Publication No :WO 2011/141510
(61) Patent of Addition to Application Number :NA
Filing Date :NA
(62) Divisional to Application Number :NA
Filing Date :NA

(71)**Name of Applicant :**
1)BOMBARDIER TRANSPORTATION GMBH
Address of Applicant :Schneberger Ufer 1 10785 Berlin Germany
(72)**Name of Inventor :**
1)SKUMAWITZ Erwin
2)KRSTEN Thomas
3)STOCKMAYER Michael
4)CEPAK Werner

(57) Abstract :
The invention relates to a drive for rail vehicles, comprising - a drive motor (1) with a stator (22) and a rotor (4) and - at least one wheel (7) which is driven by the drive motor (1), or a wheel set (7a, 7b) which is driven by the drive motor and which rolls on the rails of a track when the rail vehicle operates, wherein the stator (22) of the drive motor (1) is supported via a cardanically movable suspension (2) on a bogie (100) of the rail vehicle, on a wagon body of the rail vehicle or on a structure which is connected to the bogie and/or to the wagon body, and the rotor (4) of the drive motor (1) is coupled via a cardanically movable joint (5) and/or via a cardanically movable coupling to the wheel (7), to the wheel set (7a, 7b), to at least one wheel of the wheel set and/or to a shaft of the wheel set, with the result that when the rail vehicle operates the drive force of the drive motor (1) is transmitted via the joint (5) and/or the coupling. Fig.1 7b 3b 100 8 110 Z5 6 A + 30 Z Z1 1 11 9

No. of Pages : 53 No. of Claims : 11

(12) PATENT APPLICATION PUBLICATION
(19) INDIA
(22) Date of filing of Application :30/11/2012
(21) Application No.10446/DELNP/2012 A
(43) Publication Date : 05/09/2014

(54) Title of the invention : IDENTIFICATION AND SELECTION OF AT LEAST ONE CORD BLOOD UNIT FOR TRANSPLANTATION

(51) International classification	:G06F19/24,G06F19/00,G06F19/18
(31) Priority Document No	:10075215.3
(32) Priority Date	:20/05/2010
(33) Name of priority country	:EPO
(86) International Application No	:PCT/EP2011/058242
Filing Date	:20/05/2011
(87) International Publication No	:WO 2011/144730
(61) Patent of Addition to Application Number	:NA
Filing Date	:NA
(62) Divisional to Application Number	:NA
Filing Date	:NA

(71)**Name of Applicant :**
1)CYTOLON AG
Address of Applicant :Am Karlsbad 15 10785 Berlin Germany
(72)**Name of Inventor :**
1)KLEIN Thomas

(57) Abstract :
The invention describes a method for the identification and selection for at least one cord blood unit for a transplantation.

No. of Pages : 69 No. of Claims : 12

(12) PATENT APPLICATION PUBLICATION
(19) INDIA
(22) Date of filing of Application :30/11/2012
(21) Application No.10447/DELNP/2012 A
(43) Publication Date : 05/09/2014

(54) Title of the invention : COMPOSITIONS OF WARM MIX ASPHALT PROCESS FOR THE SAME USE THEREOF IN SURFACES

(51) International classification :C08L95/00,E01C7/18,E01C7/35
(31) Priority Document No :NA
(32) Priority Date :NA
(33) Name of priority country :NA
(86) International Application No :PCT/BR2011/000105
Filing Date :13/04/2011
(87) International Publication No:WO 2012/139180
(61) Patent of Addition to Application Number :NA
Filing Date :NA
(62) Divisional to Application Number :NA
Filing Date :NA

(71)**Name of Applicant :**
1)QUIMIGEL INDšSTRIA E COM‰RCIO LTDA.
Address of Applicant :Rua Alberto Jos 517 Jardim Maria Helena 06787 370 Tabo£o da Serra SP Brazil
(72)**Name of Inventor :**
1)LEAL Jos Fernando
2)LEAL Jasmim

(57) Abstract :
The present invention relates to use of organic chemical additives for the preparation of warm asphalt mixtures. The compositions of asphalt mixtures in accordance with the present invention provides a manufacturing spreading and compaction lower temperatures up to 70°C compared to the temperatures used in the production and application of conventional hot mix asphalt used in paving and road asphalt concrete overlays.

No. of Pages : 19 No. of Claims : 14

(12) PATENT APPLICATION PUBLICATION
(21) Application No.10448/DELNP/2012 A
(19) INDIA
(22) Date of filing of Application :30/11/2012
(43) Publication Date : 05/09/2014

(54) Title of the invention : PRINTING INK HAVING ENHANCED GLOSS AND LOWER VISCOSITY

(51) International classification :C09D11/00
(31) Priority Document No :61/359471
(32) Priority Date :29/06/2010
(33) Name of priority country :U.S.A.
(86) International Application No :PCT/US2011/042088
Filing Date :28/06/2011
(87) International Publication No :WO 2012/006047
(61) Patent of Addition to Application Number :NA
Filing Date :NA
(62) Divisional to Application Number :NA
Filing Date :NA

(71)**Name of Applicant :**
1)E. I. DU PONT DE NEMOURS AND COMPANY
Address of Applicant :1007 Market Street Wilmington Delaware 19898 U.S.A.
(72)**Name of Inventor :**
1)KRAITER Daniel C.
2)WU Dan Qing

(57) Abstract :
This disclosure relates to ink composition having a viscosity of 0.02 13 Poise comprising an inorganic pigment surface treated with alumina and at least one silicon based surface treatment selected from the group consisting of polysiloxane and polysiloxane block polymer to form a treated inorganic pigment wherein the silicon based surface treatment is present in the amount of about 0.3 to about 1% based on the total weight of the treated inorganic pigment; a binder resin having a glass transition temperature of less than 50 °C and comprising at least one adhesion promoting group; and a solvent based ink vehicle having the following solubility parameters using the MPa units: d of greater than about 15.9 a d of less than about 9.1 and a d of less than about 12.1. These inks have enhanced gloss and lower viscosity characteristics.

No. of Pages : 31 No. of Claims : 33

(12) PATENT APPLICATION PUBLICATION
(21) Application No.10449/DELNP/2012 A
(19) INDIA
(22) Date of filing of Application :30/11/2012
(43) Publication Date : 05/09/2014

(54) Title of the invention : METHODS AND SYSTEMS FOR COMPUTER AIDED EVENT AND VENUE SETUP AND MODELING AND INTERACTIVE MAPS

(51) International classification :G06Q50/00
(31) Priority Document No :61/355000
(32) Priority Date :15/06/2010
(33) Name of priority country :U.S.A.
(86) International Application No :PCT/US2011/040546
Filing Date :15/06/2011
(87) International Publication No :WO 2011/159811
(61) Patent of Addition to Application Number :NA
Filing Date :NA
(62) Divisional to Application Number :NA
Filing Date :NA

(71)**Name of Applicant :**
1)TICKETMASTER LLC
Address of Applicant :8800 Sunset Blvd. 6th Floor West Hollywood CA 90069 U.S.A.
(72)**Name of Inventor :**
1)DENKER Dennis
2)YUNG CHIEN LEW Raymond
3)HSU Debbie
4)CALLAGHAN James Paul
5)STENBACK Scott
6)BENSEN Bradford J.

(57) Abstract :
Described are systems and methods for designing certain aspects of an event venue and for communicating information regarding the event and the event venue to others. Certain embodiments provide a dynamic seat map via which an operator can assign certain characteristics to specific seats and/or seating sections. Certain embodiments generate interactive maps for users via which information from a plurality of sources may be integrated and visually displayed. The user may specify certain criteria and the interactive map may identify to the user seats and/or sections that match such criteria. Certain embodiments provide an interactive seat map via which users can select seats and share information.

No. of Pages : 185 No. of Claims : 120

(12) PATENT APPLICATION PUBLICATION
(19) INDIA
(22) Date of filing of Application :30/11/2012
(21) Application No.10450/DELNP/2012 A
(43) Publication Date : 05/09/2014

(54) Title of the invention : BIPOLAR OVERVOLTAGE BATTERY PULSER AND METHOD

(51) International classification :H02J7/00
(31) Priority Document No :12/774190
(32) Priority Date :05/05/2010
(33) Name of priority country :U.S.A.
(86) International Application No :PCT/EP2011/002250
Filing Date :05/05/2011
(87) International Publication No :WO 2011/138038
(61) Patent of Addition to Application Number :NA
Filing Date :NA
(62) Divisional to Application Number :NA
Filing Date :NA

(71)**Name of Applicant :**
1)AANENSEN Ove T.
Address of Applicant :Hyllebakken 2 N 4622 Kristiansand Norway
2)VALAND Dag Arild
(72)**Name of Inventor :**
1)AANENSEN Ove T.
2)VALAND Dag Arild

(57) Abstract :
A bipolar overvoltage battery pulser and method are provided that apply a positive pulse voltage and a negative pulse voltage alternately across the terminals of a battery. The object of the bipolar overvoltage battery pulser and method is to increase the cycle lifetime and capacity of storage batteries such as lead acid batteries. The rise times for the leading edges of the positive pulses and for the trailing edges of the negative pulses are short compared to the ionic relaxation time in the electrochemical solution. Alternating between the positive and negative pulses gives each new pulse an equal starting condition without realizing any memory effect that otherwise may result if the last applied pulse was of the same polarity which reduces the extent of overvoltage that may be applied to the battery and decrease the highest useable pulse cycling frequencies that could be achieved without experiencing pulse overlapping. The shape type and timing of the pulses may be adjusted to create overvoltage pulses having high duration and amplitude.

No. of Pages : 41 No. of Claims : 27

(12) PATENT APPLICATION PUBLICATION
(19) INDIA
(22) Date of filing of Application :30/11/2012
(21) Application No.10451/DELNP/2012 A
(43) Publication Date : 05/09/2014

(54) Title of the invention : COATING FORMULATION FOR PREPARING A HYDROPHILIC COATING

(51) International classification :C08K5/00,C09D201/00
(31) Priority Document No :10166133.8
(32) Priority Date :16/06/2010
(33) Name of priority country :EPO
(86) International Application No :PCT/EP2011/060066
Filing Date :16/06/2011
(87) International Publication No :WO 2011/157805
(61) Patent of Addition to Application Number :NA
Filing Date :NA
(62) Divisional to Application Number :NA
Filing Date :NA

(71)**Name of Applicant :**
1)DSM IP ASSETS B.V.
Address of Applicant :Het Overloon 1 NL 6411 TE Heerlen Netherlands
(72)**Name of Inventor :**
1)BELT Johannes Wilhelmus
2)WOLF Johannes Bronislaw

(57) Abstract :
The invention is directed to a coating formulation for preparing a hydrophilic coating a hydrophilic polymer a Norrish Type II photoinitiator comprising a substituted benzohenone xanthone tioxanthone or anthraquinone and more than 70 wt% of a carrier liquid; to a method of forming a hydrophilic coating on a substrate the method comprising: applying a coating formulation to at least one surface of an article and allowing the coating formulation to cure for a time period less than 360 seconds; and to an article comprising at least one hydrophilic coating.

No. of Pages : 21 No. of Claims : 14

(12) PATENT APPLICATION PUBLICATION
(21) Application No.10452/DELNP/2012 A
(19) INDIA
(22) Date of filing of Application :30/11/2012
(43) Publication Date : 05/09/2014

(54) Title of the invention : COMPACTED LIQUID LAUNDRY DETERGENT COMPOSITION COMPRISING LIPASE OF BACTERIAL ORIGIN

(51) International classification	:C11D1/02,C11D1/83,C11D3/386	(71)**Name of Applicant :**
(31) Priority Document No	:10165574.4	**1)THE PROCTER & GAMBLE COMPANY**
(32) Priority Date	:10/06/2010	Address of Applicant :One Procter & Gamble Plaza Cincinnati OH 45202 U.S.A.
(33) Name of priority country	:EPO	(72)**Name of Inventor :**
(86) International Application No	:PCT/US2011/039350	**1)LANT Neil Joseph**
Filing Date	:07/06/2011	
(87) International Publication No	:WO 2011/156297	
(61) Patent of Addition to Application Number	:NA	
Filing Date	:NA	
(62) Divisional to Application Number	:NA	
Filing Date	:NA	

(57) Abstract :
The present invention relates to a liquid laundry detergent composition comprising: (i) detersive surfactant comprising anionic detersive surfactant and optionally non ionic surfactant optionally wherein the weight ratio of anionic detersive surfactant to non ionic detersive surfactant is greater than 1:1; (ii) optionally surfactancy boosting polymer; (iii) from 0wt% to 10wt% fatty acid;(iv) optionally silicone suds suppressor; (v) optionally structurant; (vi) lipase of bacterial origin; and (vii) optionally nil boron enzyme stabilizer; wherein the electrolytic strength of the composition at a concentration of 1g/l in de ionized water and at a temperature of 25C in mScm is preferably less than 200mScm

No. of Pages : 33 No. of Claims : 15

(12) PATENT APPLICATION PUBLICATION
(19) INDIA
(22) Date of filing of Application :26/11/2012
(21) Application No.10248/DELNP/2012 A
(43) Publication Date : 05/09/2014

(54) Title of the invention : FLUFENOXINE DERIVATIVES FOR THE TREATMENT AND PREVENTION OF AMILOYD PATHOLOGIES

(51) International classification :C07D211/22,C07D211/24,C07D401/12
(31) Priority Document No :10382140.1
(32) Priority Date :24/05/2010
(33) Name of priority country :EPO
(86) International Application No :PCT/EP2011/058374
Filing Date :23/05/2011
(87) International Publication No :WO 2011/147780
(61) Patent of Addition to Application Number :NA
Filing Date :NA
(62) Divisional to Application Number :NA
Filing Date :NA

(71)**Name of Applicant :**
1)FAES FARMA S.A.
Address of Applicant :M¡ximo Aguirre 14 E 48940 Lamiako (Lejona) Vizcaya Spain
(72)**Name of Inventor :**
1)LEDO GMEZ Francisco
2)MU'OZ MU'OZ Ana
3)PUMAR DUR N Carmen

(57) Abstract :
The present invention is directed to a compound of formula (I) for use in a method to treat or ameliorate amyloid or tau pathologies such as Alzheimer s disease or symptoms thereof. The invention is also directed to new compounds of formula (I) of subformula (II) (III) (IV) or (V).

No. of Pages : 58 No. of Claims : 15

(12) PATENT APPLICATION PUBLICATION
(19) INDIA
(22) Date of filing of Application :03/12/2012
(21) Application No.10485/DELNP/2012 A
(43) Publication Date : 05/09/2014

(54) Title of the invention : ACRYLIC RUBBER COMPOSITION VULCANIZATE HOSE PART AND SEALING PART

(51) International classification :C08L63/00,C08G59/20,C08K3/36
(31) Priority Document No :2010140071
(32) Priority Date :21/06/2010
(33) Name of priority country :Japan
(86) International Application No :PCT/JP2011/058261
Filing Date :31/03/2011
(87) International Publication No :WO 2011/162004
(61) Patent of Addition to Application Number :NA
Filing Date :NA
(62) Divisional to Application Number :NA
Filing Date :NA

(71)**Name of Applicant :**
1)DENKI KAGAKU KOGYO KABUSHIKI KAISHA
Address of Applicant :1 1 Nihonbashi Muromachi 2 chome Chuo ku Tokyo 1038338 Japan
(72)**Name of Inventor :**
1)IKARI Satoru
2)ABE Yasushi
3)MIYAUCHI Toshiaki

(57) Abstract :
Disclosed is an acrylic rubber composition which has high processing safety and after being subjected to secondary vulcanization (hot air vulcanization) has sufficient mechanical properties and excellent permanent compression strain resistance. Also disclosed is a vulcanizate thereof. The acrylic rubber composition comprises (A) an epoxy group containing acrylic rubber (B) an imidazole compound represented by general formula (1) (C) silica and (D) a silane coupling agent represented by general formula (2). Such an acrylic rubber composition has excellent mechanical properties such as permanent compression strain resistance and hardness.

No. of Pages : 37 No. of Claims : 8

(12) PATENT APPLICATION PUBLICATION
(19) INDIA
(22) Date of filing of Application :03/12/2012
(21) Application No.10486/DELNP/2012 A
(43) Publication Date : 05/09/2014

(54) Title of the invention : INTERMEDIATE BUS ARCHITECTURE POWER SUPPLY CONTROLLER

(51) International classification :H02J1/00,H02M3/158
(31) Priority Document No :NA
(32) Priority Date :NA
(33) Name of priority country :NA
(86) International Application No :PCT/EP2010/060319
Filing Date :16/07/2010
(87) International Publication No :WO 2012/007055
(61) Patent of Addition to Application Number :NA
Filing Date :NA
(62) Divisional to Application Number :NA
Filing Date :NA

(71)**Name of Applicant :**
1)TELEFONAKTIEBOLAGET LM ERICSSON (publ)
Address of Applicant :S 164 83 Stockholm Sweden
(72)**Name of Inventor :**
1)HOLMBERG Torbjrn
2)KARLSSON Magnus

(57) Abstract :
A voltage controller (700) operable to generate control signals for controlling an intermediate bus voltage (V) in an intermediate bus architecture power system (100) the intermediate bus voltage comprising a voltage output from a first stage DC to DC power converter (200) to at least one second stage DC to DC power converter (500 1 to 500 K) via the intermediate voltage bus (800) in the intermediate bus architecture power system. The voltage controller (700) comprises a receiver (710) operable to receive values of the current input to the first stage DC to DC power converter (200) or the current and voltage output by the first stage DC to DC power converter (200). The voltage controller further comprises an efficiency measuring unit (770) operable to determine a measure of an efficiency of the intermediate bus architecture power system (100) in accordance with the received values. The efficiency measuring unit (770) is operable to: determine a first value of the efficiency measure using the received values corresponding to a first intermediate bus voltage (V); and determine a second value of the efficiency measure using the received values corresponding to a second intermediate bus voltage (V) higher than the first intermediate bus voltage. The voltage controller also includes a control signal generator (770) operable to generate control signals to cause the first stage DC to DC converter (200) to set the intermediate bus voltage (V) to a voltage higher than the second intermediate bus voltage if the second efficiency measure value represents a higher system efficiency than the first efficiency measure value and to a voltage lower than the first intermediate bus voltage if the second efficiency measure value represents a lower system efficiency than the first efficiency measure value.

No. of Pages : 55 No. of Claims : 25

(12) PATENT APPLICATION PUBLICATION
(19) INDIA
(22) Date of filing of Application :03/12/2012
(21) Application No.10488/DELNP/2012 A
(43) Publication Date : 05/09/2014

(54) Title of the invention : DOWNLINK SCHEDULING IN HETEROGENEOUS NETWORKS

(51) International classification :H04W72/04
(31) Priority Document No :61/357264
(32) Priority Date :22/06/2010
(33) Name of priority country :U.S.A.
(86) International Application No :PCT/EP2011/060119
Filing Date :17/06/2011
(87) International Publication No :WO 2011/161015
(61) Patent of Addition to Application Number :NA
Filing Date :NA
(62) Divisional to Application Number :NA
Filing Date :NA

(71)**Name of Applicant :**
1)TELEFONAKTIEBOLAGET L M ERICSSON (publ)
Address of Applicant :S 164 83 Stockholm Sweden
(72)**Name of Inventor :**
1)LINDOFF Bengt
2)LINDBOM Lars
3)PARKVALL Stefan

(57) Abstract :
The present invention provides methods to support scheduling of transmissions from a pico base station or micro base station to a mobile terminal operating in a link imbalance zone where interference from macro base station is present. A method is provided to enable the mobile terminal to detect when it is in a link imbalance zone and for triggering scheduling restrictions when the mobile terminal is in the link imbalance zone.

No. of Pages : 35 No. of Claims : 28

(12) PATENT APPLICATION PUBLICATION
(19) INDIA
(22) Date of filing of Application :03/12/2012
(21) Application No.10496/DELNP/2012 A
(43) Publication Date : 05/09/2014

(54) Title of the invention : FLEXIBLE REINFORCED GASKET

(51) International classification :B32B7/12
(31) Priority Document No :12/783309
(32) Priority Date :19/05/2010
(33) Name of priority country :U.S.A.
(86) International Application No :PCT/US2011/024897
Filing Date :15/02/2011
(87) International Publication No :WO 2011/146157
(61) Patent of Addition to Application Number :NA
Filing Date :NA
(62) Divisional to Application Number :NA
Filing Date :NA

(71)**Name of Applicant :**
1)GARLOCK SEALING TECHNOLOGIES LLC
Address of Applicant :1666 Division Street Palmyra NY14522 U.S.A.
(72)**Name of Inventor :**
1)MCMANUS Michael
2)NICHOLS Paul
3)DAMDAR Sherwin

(57) Abstract :
A reinforced gasket material. A non metallic scrim layer is interposed between layers of gasket material to provide strength to the gasket material. The layers of the gasket material can include binding agent to aid adhering to each other and to the non metallic scrim layer. The non metallic scrim layer can also be coated in binding agent. The layers of the gasket material can include high temperature sealing material compressed fiber exfoliaed graphite or polytetrafluoroethylene.

No. of Pages : 17 No. of Claims : 20

(12) PATENT APPLICATION PUBLICATION
(19) INDIA
(22) Date of filing of Application :03/12/2012
(21) Application No.10497/DELNP/2012 A
(43) Publication Date : 05/09/2014

(54) Title of the invention : WELDING MATERIAL FOR NI BASED HEAT RESISTANT ALLOY AND WELDED METAL AND WELDED JOINT EACH USING SAME

(51) International classification :B23K35/30,C22C19/05
(31) Priority Document No :2010134673
(32) Priority Date :14/06/2010
(33) Name of priority country :Japan
(86) International Application No :PCT/JP2011/063097
Filing Date :08/06/2011
(87) International Publication No :WO 2011/158706
(61) Patent of Addition to Application Number :NA
Filing Date :NA
(62) Divisional to Application Number :NA
Filing Date :NA

(71)**Name of Applicant :**
1)NIPPON STEEL & SUMITOMO METAL CORPORATION
Address of Applicant :6 1 Marunouchi 2 chome Chiyoda ku Tokyo 1008071 Japan
(72)**Name of Inventor :**
1)HIRATA Hiroyuki
2)YOSHIZAWA Mitsuru
3)OGAWA Kazuhiro
4)ISEDA Atsuro
5)SEMBA Hiroyuki

(57) Abstract :
Disclosed is a welding material for an Ni based heat resistant alloy which has a chemical composition that contains 0.06 0.18% of C 0.5% or less of Si 1.5% or less of Mn 46 56% of Ni 10 15% of Co 20 25% of Cr more than 10.0% but 14.0% or less of Mo 0.01 0.5% of Ti 0.1 1.0% of Al and 0.006% or less of N and additionally if necessary 0.1% or less of Nd with the balance made up of Fe and impurities while controlling O P and S contained as impurities to 0.02% or less 0.008% or less and 0.005% or less respectively. The welding material for an Ni based heat resistant alloy exhibits excellent high temperature cracking resistance during the welding. A welded metal that has high temperature cracking resistance during the welding stress relaxation cracking resistance when in use for a long period of time at high temperatures and good creep strength can be provided using the above described welding material. In addition a welded joint can be provided using the above described welding material said welded joint being composed of a base of an Ni based heat resistant alloy that has excellent high temperature strength and a welded metal that has high temperature cracking resistance during the welding stress relaxation cracking resistance when in use for a long period of time at high temperatures and good creep strength.

No. of Pages : 36 No. of Claims : 6

(12) PATENT APPLICATION PUBLICATION
(21) Application No.10498/DELNP/2012 A
(19) INDIA
(22) Date of filing of Application :03/12/2012
(43) Publication Date : 05/09/2014

(54) Title of the invention : WELDING MATERIAL FOR AUSTENITIC HEAT RESISTANT STEEL AND WELDED METAL AND WELDED JOINT EACH USING SAME

(51) International classification :B23K35/30,B23K9/00,B23K9/23
(31) Priority Document No :2010129858
(32) Priority Date :07/06/2010
(33) Name of priority country :Japan
(86) International Application No :PCT/JP2011/062698
Filing Date :02/06/2011
(87) International Publication No :WO 2011/155389
(61) Patent of Addition to Application Number :NA
Filing Date :NA
(62) Divisional to Application Number :NA
Filing Date :NA

(71)**Name of Applicant :**
1)NIPPON STEEL & SUMITOMO METAL CORPORATION
Address of Applicant :6 1 Marunouchi 2 chome Chiyoda ku Tokyo 1008071 Japan
(72)**Name of Inventor :**
1)HIRATA Hiroyuki
2)OKADA Hirokazu
3)JOUTOKU Kana
4)OGAWA Kazuhiro
5)YOSHIZAWA Mitsuru

(57) Abstract :
Disclosed is a welding material for austenitic heat resistant steel which has a chemical composition that contains more than 0.05% but 0.18% or less of C 0.5% or less of Si 1.5% or less of Mn 40 50% of Ni 20 25% of Cr more than 8.0% but 13.0% or less of W 0.01 0.2% of Ti more than 0.03% but 0.20% or less of N and 0.01% or less of Al and additionally if necessary less than 0.60% of Nb with the balance made up of Fe and impurities while controlling O P and S contained as impurities to 0.02% or less 0.008% or less and 0.005% or less respectively. The welding material for austenitic heat resistant steel exhibits excellent high temperature cracking resistance during the welding. A welded metal that has high temperature cracking resistance during the welding stress relaxation cracking resistance when in use for a long period of time at high temperatures and good creep strength can be provided using the above described welding material. In addition a welded joint can be provided using the above described welding material from a base that has excellent creep strength at high temperatures and a welded metal that has high temperature cracking resistance during the welding stress relaxation cracking resistance when in use for a long period of time at high temperatures and good creep strength.

No. of Pages : 36 No. of Claims : 6

(12) PATENT APPLICATION PUBLICATION
(19) INDIA
(22) Date of filing of Application :04/01/2013
(21) Application No.105/DELNP/2013 A
(43) Publication Date : 05/09/2014

(54) Title of the invention : PROTECTED METAL ANODE ARCHITECTURE AND METHOD OF FORMING THE SAME

(51) International classification :H01M4/62,H01M4/134,H01M4/1395
(31) Priority Document No :201010223498.X
(32) Priority Date :05/07/2010
(33) Name of priority country :China
(86) International Application No :PCT/US2011/042312
Filing Date :29/06/2011
(87) International Publication No :WO 2012/006142
(61) Patent of Addition to Application Number :NA
Filing Date :NA
(62) Divisional to Application Number :NA
Filing Date :NA

(71)**Name of Applicant :**
1)CORNING INCORPORATED
Address of Applicant :1 Riverfront Plaza Corning New York 14831 U.S.A.
2)SHANGHAI INSTITUTE OF CERAMICS CHINESE ACADEMY OF SCIENCES
(72)**Name of Inventor :**
1)BADDING Michael Edward
2)HE Lin
3)HUANG Lezhi
4)LIU Yu
5)WEN Zhaoyin
6)WU Meifen

(57) Abstract :
The invention provides a protected metal anode architecture comprising: a metal anode layer; and an organic protection film formed over and optionally in direct contact with the metal anode layer wherein the metal anode layer comprises a metal selected from the group consisting of an alkaline metal and an alkaline earth metal and the organic protection film comprises a reaction product of the metal and an electron donor compound. The invention further provides a method of forming a protected metal anode architecture.

No. of Pages : 31 No. of Claims : 20

(12) PATENT APPLICATION PUBLICATION
(19) INDIA
(22) Date of filing of Application :03/12/2012
(21) Application No.10500/DELNP/2012 A
(43) Publication Date : 05/09/2014

(54) Title of the invention : ION IMPLANTED SELECTIVE EMITTER SOLAR CELLS WITH IN SITU SURFACE PASSIVATION

(51) International classification :H01L31/068,H01L31/18,H01L21/265
(31) Priority Document No :12/793363
(32) Priority Date :03/06/2010
(33) Name of priority country :U.S.A.
(86) International Application No :PCT/US2011/036602
Filing Date :16/05/2011
(87) International Publication No :WO 2011/152982
(61) Patent of Addition to Application Number :NA
Filing Date :NA
(62) Divisional to Application Number :NA
Filing Date :NA

(71)**Name of Applicant :**
1)SUNIVA INC.
Address of Applicant :5775 Peachtree Industrial Boulevard Norcross GA 30092 U.S.A.
(72)**Name of Inventor :**
1)ROHATGI Ajeet
2)YELUNDUR Vijay
3)CHANDRASEKARAN Vinodh
4)DAVIS Hubert Preston
5)DAMIANI Ben

(57) Abstract :
Solar cells and methods for their manufacture are disclosed. An example method may include providing a p type doped silicon substrate and introducing n type dopant to a first and second region of the front surface of the substrate by ion implantation so that the second region is more heavily doped than the first region. The substrate may be subjected to a single high temperature anneal cycle to activate the dopant drive the dopant into the substrate produce a p n junction and form a selective emitter. Oxygen may be introduced during the single anneal cycle to form in situ front and back passivating oxide layers. Fire through of front and back contacts as well as metallization with contact connections may be performed in a single co firing operation. Associated solar cells are also provided.

No. of Pages : 32 No. of Claims : 20

(12) PATENT APPLICATION PUBLICATION
(19) INDIA
(22) Date of filing of Application :03/12/2012
(21) Application No.10501/DELNP/2012 A
(43) Publication Date : 05/09/2014

(54) Title of the invention : RING MEMBER FOR ROLLING BEARING RING AND ROLLING BEARING ASSEMBLY

(51) International classification :F16C33/64,B23K9/00,B23K31/00
(31) Priority Document No :2010131621
(32) Priority Date :09/06/2010
(33) Name of priority country :Japan
(86) International Application No :PCT/JP2011/062917
Filing Date :06/06/2011
(87) International Publication No :WO 2011/155434
(61) Patent of Addition to Application Number :NA
Filing Date :NA
(62) Divisional to Application Number :NA
Filing Date :NA

(71)**Name of Applicant :**
1)NTN CORPORATION
Address of Applicant :3 17 Kyomachibori 1 chome Nishi ku Osaka shi Osaka 5500003 Japan
(72)**Name of Inventor :**
1)MATSUBARA Yukio
2)TANAKA Hiromasa

(57) Abstract :
Disclosed are a ring member for a rolling bearing raceway ring and a rolling bearing that provide improved quality due to sufficient tempering and welding of cavities cost reductions due to the elimination of the need for a step to punch out a central section etc. reduced energy consumption and reduced resource consumption due to increased yields. The ring member (1) is formed from steel a rod shaped member (w) rolled into the cross sectional shape of the ring member (1) is formed into a ring shape and the end surfaces of both ends are bonded to each other. The bond is a weld or other liquid phase bond. The ring member (1) is used as a raw material prior to machining in the raceway ring of the rolling bearing. If used as such the ring member (1) has an annular groove (3) formed in the trajectory groove of the rolling bearing. The bond section (1a) is strengthened by friction stir welding after rough turning of the ring member (1) that achieves a shape approaching the cross sectional shape of the bearing raceway ring.

No. of Pages : 31 No. of Claims : 12

(12) PATENT APPLICATION PUBLICATION
(19) INDIA
(22) Date of filing of Application :03/12/2012
(21) Application No.10505/DELNP/2012 A
(43) Publication Date : 05/09/2014

(54) Title of the invention : PIGMENT DISPERSIONS RELATED COATING COMPOSITIONS AND COATED SUBSTRATES

(51) International classification :C09B67/00,C09D5/00
(31) Priority Document No :61/350047
(32) Priority Date :01/06/2010
(33) Name of priority country :U.S.A.
(86) International Application No :PCT/US2011/037744
Filing Date :24/05/2011
(87) International Publication No :WO 2011/153029
(61) Patent of Addition to Application Number :NA
Filing Date :NA
(62) Divisional to Application Number :NA
Filing Date :NA

(71)**Name of Applicant :**
1)PPG INDUSTRIES OHIO INC.
Address of Applicant :3800 West 143rd Street Cleveland Ohio 44111 U.S.A.
(72)**Name of Inventor :**
1)DUFFY Shawn P.
2)DONALDSON Susan F.
3)JENNINGS Robert E.

(57) Abstract :
Disclosed are pigment dispersions and coating compositions that include such pigment dispersions. The pigment dispersions include: (a) a pigment; (b) an acid functional hydroxyl functional and secondary amine functional acrylic polymer having a weight average molecular weight of at least 11 000; and (c) a liquid carrier comprising an organic solvent.

No. of Pages : 29 No. of Claims : 21

(12) PATENT APPLICATION PUBLICATION
(19) INDIA
(22) Date of filing of Application :03/12/2012
(21) Application No.10506/DELNP/2012 A
(43) Publication Date : 05/09/2014

(54) Title of the invention : PERSONAL CARE COMPOSITION COMPRISING A SURFACTANT RICH GEL NETWORK

(51) International classification :A61Q5/12
(31) Priority Document No :61/353465
(32) Priority Date :10/06/2010
(33) Name of priority country :U.S.A.
(86) International Application No :PCT/US2011/039026
Filing Date :03/06/2011
(87) International Publication No :WO 2011/156217
(61) Patent of Addition to Application Number :NA
Filing Date :NA
(62) Divisional to Application Number :NA
Filing Date :NA

(71)**Name of Applicant :**
1)THE PROCTER & GAMBLE COMPANY
Address of Applicant :One Procter & Gamble Plaza Cincinnati Ohio 45202 U.S.A.
(72)**Name of Inventor :**
1)WISE Geoffrey Marc
2)WOOD Randall Lee
3)CHU Long Van

(57) Abstract :
The present application relates to a process for preparing a personal care composition by combining a fatty amphiphile above its melt temperature and a surfactant in a weight ratio from 0.1:1 to 0.99:1 to form a gel network premix contacting the gel network premix with a shearing device cooling the gel network premix to a temperature below the melt temperature of the fatty amphiphile and adding the cooled premix to personal care components to form the personal care composition.

No. of Pages : 26 No. of Claims : 15

(12) PATENT APPLICATION PUBLICATION
(19) INDIA
(22) Date of filing of Application :27/11/2012
(21) Application No.10320/DELNP/2012 A
(43) Publication Date : 05/09/2014

(54) Title of the invention : FRESH WATER GENERATOR UTILIZING AIR

(51) International classification :E03B3/28,C02F1/04
(31) Priority Document No :201010165600.5
(32) Priority Date :30/04/2010
(33) Name of priority country :China
(86) International Application No :PCT/CN2011/073521
Filing Date :29/04/2011
(87) International Publication No :WO 2011/134426
(61) Patent of Addition to Application Number :NA
Filing Date :NA
(62) Divisional to Application Number :NA
Filing Date :NA

(71)**Name of Applicant :**
1)HSU Henry
Address of Applicant :Suite 901 Enviromental Building East Ring 2nd Rd Longhua Shenzhen Guangdong 518000 China
2)WAN Jimmy
(72)**Name of Inventor :**
1)HSU Henry
2)WAN Jimmy

(57) Abstract :
A fresh water generator utilizing air (100) comprises a main body bracket (114), a water making system, a water purifying system and a water distributing device (126). Both sides and the rear side of the main body bracket (114) are provided with baffle plates, on which ventilating grates (116, 132, 134) are provided for sucking and exhausting air. The water making system i s arranged inside the main body bracket (114) and particularly comprises a condenser (118), an exhaust fan (140) and a water collecting tank (120), wherein the water collecting tank (120) i s arranged on the main body bracket (114) and positioned at the lower end of the con denser (118), and the exhaust fan (140) i s arranged between the condenser (118) and the ventilating grates (116, 132, 134). The water purifying sys tem i s arranged inside the main body bracket (114) and particularly com prises a pump (122) and a filtration device (192). One end of the pump (122) i s connected with the water collecting tank (120) through a pipeline, and the other end of the pump (122) i s connected with the filtration device (192) through a pipeline. The water distributing device (126) i s arranged on the main body bracket (114) and connected t o a water outlet of the fil tration device (192) through a pipeline. The fresh water generator utilizing air (100) only needs one water collecting tank (120), and water i s directly delivered to the water distributing device (126) after being filtered without storage and directly drunk, which completely solves the problem of pollu tion and bacterial growth when pure water i s stored.

No. of Pages : 41 No. of Claims : 31

(12) PATENT APPLICATION PUBLICATION
(21) Application No.10572/DELNP/2012 A
(19) INDIA
(22) Date of filing of Application :05/12/2012
(43) Publication Date : 05/09/2014

(54) Title of the invention : METHODS AND APPARATUS FOR INHIBITING SCAR FORMATION

(51) International classification :A61F13/00
(31) Priority Document No :61/397604
(32) Priority Date :14/06/2010
(33) Name of priority country :U.S.A.
(86) International Application No :PCT/US2011/040213
Filing Date :13/06/2011
(87) International Publication No :WO 2011/159623
(61) Patent of Addition to Application Number :NA
Filing Date :NA
(62) Divisional to Application Number :NA
Filing Date :NA

(71)**Name of Applicant :**
1)ZIPLINE MEDICAL INC.
Address of Applicant :1916 Fallen Leaf Lane Los Altos CA 94024 U.S.A.
(72)**Name of Inventor :**
1)BELSON Amir

(57) Abstract :
Scar formation is inhibited by simultaneously applying a vertical force and a lateral compression to the wound site during the healing process. Apparatus for applying such simultaneous forces comprise a backing and a tissue displacement device. The backing holds the tissue displacement device over the wound. The tissue displacement device may be expanded to both apply the vertical force against the wound and to draw the backing radially or laterally inward to apply the desired compression forces to the wound.

No. of Pages : 14 No. of Claims : 21

(12) PATENT APPLICATION PUBLICATION
(19) INDIA
(22) Date of filing of Application :05/12/2012
(21) Application No.10573/DELNP/2012 A
(43) Publication Date : 05/09/2014

(54) Title of the invention : FILE TRANSMISSION METHOD BASED ON DISTRIBUTED STORAGE IN WIRELESS COMMUNICATION SYSTEM

(51) International classification	:H04W48/20,H04L12/54,H04L9/18
(31) Priority Document No	:201010213925.6
(32) Priority Date	:29/06/2010
(33) Name of priority country	:China
(86) International Application No	:PCT/CN2010/077986
Filing Date	:22/10/2010
(87) International Publication No	:WO 2012/000258
(61) Patent of Addition to Application Number	:NA
Filing Date	:NA
(62) Divisional to Application Number	:NA
Filing Date	:NA

(71)**Name of Applicant :**
1)ALCATEL LUCENT
Address of Applicant :54 Rue La Botie F 75008 Paris France
(72)**Name of Inventor :**
1)BAI Yangzheng
2)LV Jun

(57) Abstract :
In order to satisfy users with new services the present invention provides a file transmission method based on distributed storage in wireless communication system. In one embodiment of the present invention the file upload method includes the following steps: S11. A user equipment transmits fragment metadata information of a file to a control node and makes a request for uploading the file to a destination; S12. A user prediction system predicts the motion of the user equipment and hereby determines the plurality of storage wireless access nodes of the user equipment; S13. The control node acknowledges the request about the upload; S14. The user equipment transmits the fragment of the file to the storage wireless access nodes; S15. The storage wireless access nodes receive and store the fragment of the file from the user equipment. By using the technical solution provided in the present invention the file transmission rate in wireless communication system can be improved.

No. of Pages : 42 No. of Claims : 15

(12) PATENT APPLICATION PUBLICATION
(21) Application No.10328/DELNP/2012 A
(19) INDIA
(22) Date of filing of Application :27/11/2012
(43) Publication Date : 05/09/2014

(54) Title of the invention : METHOD AND APPARATUS FOR DETERMINING A ZERO CROSSING OF A PHASE CURRENT OF AN ELECTRONICALLY COMMUTATED ELECTRICAL MACHINE IN PARTICULAR FOR DETERMINING A ROTOR POSITION OF THE ELECTRICAL MACHINE

(51) International classification :H02P6/18
(31) Priority Document No :10 2010 029 558.2
(32) Priority Date :01/06/2010
(33) Name of priority country :Germany
(86) International Application No :PCT/EP2011/055882
Filing Date :14/04/2011
(87) International Publication No :WO 2011/151101
(61) Patent of Addition to Application Number :NA
Filing Date :NA
(62) Divisional to Application Number :NA
Filing Date :NA

(71)**Name of Applicant :**
1)ROBERT BOSCH GMBH
Address of Applicant :Postfach 30 02 20 70442 Stuttgart Germany
(72)**Name of Inventor :**
1)FRICKER David

(57) Abstract :
THE INVENTION RELATES TO A METHOD FOR DETERMINING A TIME FOR A ZERO CROSSING OF A PHASE CURRENT IN A POLYPHASE ELECTRICAL MACHINE (2), WHEREIN THE ELECTRICAL MACHINE (2) IS DRIVEN WITH THE AID OF A DRIVER CIRCUIT (31; 50) COMPRISING POWER SWITCHES (36, 37; 52, 53) IN ORDER TO PROVIDE A PLURALITY OF PHASE VOLTAGES WHICH ARE APPLIED TO CONNECTING NODES (A1, A2, B1, B2) OF THE ELECTRICAL MACHINE (2) WHICH ARE ASSOCIATED WITH CORRESPONDING PHASES, WHEREIN AT LEAST SOME OF THE POWER SWITCHES (36, 37; 52, 53) CAN BE DRIVEN CYCLICALLY IN ACCORDANCE WITH PULSE WIDTH MODULATION WITH A DUTY FACTOR IN ORDER TO APPLY DIFFERENT POTENTIALS ALTERNATELY TO ONE OF THE CONNECTING NODES (A1, A2, B1, B2), COMPRISING THE FOLLOWING STEPS: - DRIVING THE DRIVER CIRCUIT (31; 50) FOR PROVIDING THE PHASE VOLTAGES TO OPERATE THE ELECTRICAL MACHINE (2); - DEACTIVATING THE PULSE-WIDTH-MODULATED DRIVING BY AT LEAST ONE OF THE POWER SWITCHES (36, 37; 52, 53), WITH THE RESULT THAT NO POTENTIAL IS APPLIED TO THE CONNECTING NODES (A1, A2, B1, B2) BY THE DRIVER CIRCUIT (31; 50), AT LEAST DURING A TIME SEGMENT IN EACH CYCLE OF THE PULSE WIDTH MODULATION; - DETECTING A DIODE VOLTAGE VIA A FREEWHEELING DIODE, WITH WHICH THE DEACTIVATED POWER SWITCH (36, 37; 52, 53) HAS BEEN PROVIDED, WITHIN THE TIME SEGMENT; - FIXING THE TIME FOR THE ZERO CROSSING OF THE PHASE CURRENT AS THE TIME AFTER WHICH THERE IS NO LONGER A DIODE VOLTAGE PRESENT ACROSS THE FREEWHEELING DIODE (40; 54) WITHIN THE TIME SEGMENT.

No. of Pages : 28 No. of Claims : 9

(12) PATENT APPLICATION PUBLICATION
(21) Application No.10329/DELNP/2012 A
(19) INDIA
(22) Date of filing of Application :27/11/2012
(43) Publication Date : 05/09/2014

(54) Title of the invention : METHODS AND APPARATUS FOR STORAGE AND/OR INTRODUCTION OF IMPLANT FOR HOLLOW ANATOMICAL STRUCTURE

(51) International classification :A61B17/12
(31) Priority Document No :61/357095
(32) Priority Date :22/06/2010
(33) Name of priority country :U.S.A.
(86) International Application No :PCT/US2011/041143
Filing Date :21/06/2011
(87) International Publication No :WO 2011/163157
(61) Patent of Addition to Application Number :NA
Filing Date :NA
(62) Divisional to Application Number :NA
Filing Date :NA

(71)**Name of Applicant :**
1)COVIDIEN LP
Address of Applicant :15 Hampshire Street Mansfield MA 02048 U.S.A.
(72)**Name of Inventor :**
1)RAY Miranda M.
2)NGUYEN Hoa D.
3)RODRIGUEZ John W.

(57) Abstract :
One embodiment of the apparatus comprises a housing (28) with a sheath portion (26 146) projecting distally therefrom. The sheath portion has a sheath with a lumen and a bearing surface (172) in the sheath lumen or aligned with the sheath lumen and located at or near a distal end of the sheath. The implant (10) is at least partially positioned in the apparatus and comprises an implant body (12) and a tether (14) connected to the implant body. The tether extends from the implant body distally within the sheath portion and around the bearing surface where the tether changes direction and extends back proximally from the bearing surface along and within the sheath portion. The apparatus is configured to move the first tether portion proximally and thereby draw the implant body distally along and within the sheath lumen.

No. of Pages : 64 No. of Claims : 35

(12) PATENT APPLICATION PUBLICATION
(19) INDIA
(22) Date of filing of Application :05/12/2012
(21) Application No.10588/DELNP/2012 A
(43) Publication Date : 05/09/2014

(54) Title of the invention : IMPROVEMENTS IN OR RELATING TO VEHICLE ACCESS

(51) International classification :G07C9/00,H04M1/04,G06F1/16
(31) Priority Document No :1009014.0
(32) Priority Date :28/05/2010
(33) Name of priority country :U.K.
(86) International Application No :PCT/EP2011/058673
Filing Date :26/05/2011
(87) International Publication No :WO 2011/147932
(61) Patent of Addition to Application Number :NA
Filing Date :NA
(62) Divisional to Application Number :NA
Filing Date :NA

(71)**Name of Applicant :**
1)JAGUAR CARS LTD
Address of Applicant :Abbey Road; Whitley Coventry Warwickshire CV3 4LF U.K.
(72)**Name of Inventor :**
1)PICKERING Carl

(57) Abstract :
A case (10) for a mobile telephone or other nomadic device the case (10) comprising communication means (20) for wirelessly communicating with a security and/or access system of a vehicle or property. The communication means (20) may be embedded within the material forming the case (10) or may be retained in a slot or recess (28) within the case (10). The communication means (20) comprises means (22 24) arranged to transmit control or operation commands to the vehicle or property so as to operate or control one or more functions or devices. The case (10) may comprise one or more buttons or switches 34a 34I actuable by the user to transmit said commands. A mobile telephone or other nomadic device having such a case (10). A vehicle adapted to work with a mobile telephone or a case (10) as described hereinbefore.

No. of Pages : 26 No. of Claims : 24

(12) PATENT APPLICATION PUBLICATION
(19) INDIA
(22) Date of filing of Application :05/12/2012
(21) Application No.10577/DELNP/2012 A
(43) Publication Date : 05/09/2014

(54) Title of the invention : LAMINATED BODY AND VULCANIZATE THEREFOR

(51) International classification :B32B25/14,B32B27/30
(31) Priority Document No :2010132347
(32) Priority Date :09/06/2010
(33) Name of priority country :Japan
(86) International Application No :PCT/JP2011/054470
Filing Date :28/02/2011
(87) International Publication No :WO 2011/155236
(61) Patent of Addition to Application Number :NA
Filing Date :NA
(62) Divisional to Application Number :NA
Filing Date :NA

(71)**Name of Applicant :**
1)DENKI KAGAKU KOGYO KABUSHIKI KAISHA
Address of Applicant :1 1 Nihonbashi Muromachi 2 chome Chuo ku Tokyo 1038338 Japan
(72)**Name of Inventor :**
1)KAWASAKI Takashi
2)SUNADA Takashi
3)HAGIWARA Shogo
4)ABE Yasushi
5)MIYAUCHI Toshiaki

(57) Abstract :
Provided is a laminated body having strongly bonded elastomer layers. The laminated body (1) comprises an acrylic elastomer layer (11) and a fluorine elastomer layer (12) bonded to each other. The acrylic elastomer layer (11) comprises an acrylic elastomer composition obtained by adding an onium salt to an acrylic elastomer containing an epoxy group and the fluorine elastomer layer (12) comprises a fluorine elastomer composition obtained by adding a polyol crosslinking agent to a fluorine elastomer. Such a laminated body (1) strongly bonds similar elastomers even if surface treatment is not carried out.

No. of Pages : 32 No. of Claims : 3

(12) PATENT APPLICATION PUBLICATION
(19) INDIA
(22) Date of filing of Application :05/12/2012
(21) Application No.10578/DELNP/2012 A
(43) Publication Date : 05/09/2014

(54) Title of the invention : POWER DISTRIBUTION SYSTEM HAVING PRIORITY LOAD CONTROL

(51) International classification :H02J13/00,H02J3/00,H02J9/06
(31) Priority Document No :61/350324
(32) Priority Date :01/06/2010
(33) Name of priority country :U.S.A.
(86) International Application No :PCT/US2011/038113
Filing Date :26/05/2011
(87) International Publication No :WO 2011/153063
(61) Patent of Addition to Application Number :NA
Filing Date :NA
(62) Divisional to Application Number :NA
Filing Date :NA

(71)**Name of Applicant :**
1)CATERPILLAR INC.
Address of Applicant :100 N.e. Adams Street Peoria IL 61629 9510 U.S.A.
(72)**Name of Inventor :**
1)FOLKEN Keith R.

(57) Abstract :
A power distribution system (10) is disclosed. The power distribution system may have a generator (38) a first load interruption device (40) associated with the generator and a load (14) powered by the generator. The power distribution system may also have a second load interruption device (28) associated with the load and a generator controller (46). The generator controller may be configured to control the generator determine existence of a fault condition associated with electric service between the generator and the load and selectively activate the second load interruption device based on the determination. The generator controller may be further configured to determine if activation of the second load interruption device isolated the fault condition and selectively activate the first load interruption device when activation of the second load interruption device fails to isolate the fault condition.

No. of Pages : 18 No. of Claims : 10

(12) PATENT APPLICATION PUBLICATION
(19) INDIA
(22) Date of filing of Application :05/12/2012
(21) Application No.10579/DELNP/2012 A
(43) Publication Date : 05/09/2014

(54) Title of the invention : PIN FOR USE IN TRACK ROLLERS AND BOGIE ASSEMBLIES

(51) International classification	:B62D55/15,B62D55/092,F16C11/04
(31) Priority Document No	:61/356530
(32) Priority Date	:18/06/2010
(33) Name of priority country	:U.S.A.
(86) International Application No	:PCT/US2011/041092
Filing Date	:20/06/2011
(87) International Publication No	:WO 2011/160122
(61) Patent of Addition to Application Number	:NA
Filing Date	:NA
(62) Divisional to Application Number	:NA
Filing Date	:NA

(71)**Name of Applicant :**
1)CATERPILLAR INC.
Address of Applicant :100 N.E. Adams Street Peoria IL 61629 9510 U.S.A.
(72)**Name of Inventor :**
1)THORSON Timothy A.

(57) Abstract :
A pin (52) for use in a track roller (30) or bogie assembly (28) comprises an outboard facing end (56) an inboard facing end (60) having an aperture (66) a cylindrically shaped external surface (64) extending from the outboard facing end to the inboard facing end and an inner surface (68) extending inwardly from the aperture of the inboard facing end toward the outboard facing end and defining a cavity (70) within the pin. The inner surface of the pin includes a groove (72) disposed proximate the inboard facing end into which an outer surface of a resilient stopper expands to increase the pressure resistance of the pin and stopper to stopper being pushed or pulled from the pin.

No. of Pages : 25 No. of Claims : 12

(12) PATENT APPLICATION PUBLICATION
(19) INDIA
(22) Date of filing of Application :05/12/2012
(21) Application No.10580/DELNP/2012 A
(43) Publication Date : 05/09/2014

(54) Title of the invention : DISPLAY DEVICE FOR A VEHICLE

(51) International classification :B60K35/00,B60K37/06
(31) Priority Document No :10 2010 021 848.0
(32) Priority Date :28/05/2010
(33) Name of priority country :Germany
(86) International Application No :PCT/EP2011/058724
Filing Date :27/05/2011
(87) International Publication No :WO 2011/147962
(61) Patent of Addition to Application Number :NA
Filing Date :NA
(62) Divisional to Application Number :NA
Filing Date :NA

(71)**Name of Applicant :**
1)JOHNSON CONTROLS GMBH
Address of Applicant :Industriestrae 20 30 51399 Burscheid Germany
(72)**Name of Inventor :**
1)TUZAR Gert Dieter

(57) Abstract :
The invention relates to a combined display and input device (1) for a vehicle wherein a virtual first input unit (2) is provided which is designed as a touch sensitive screen for operating a plurality of functions and for displaying information. According to the invention a physical second input unit (3) is provided wherein the functions can be selected by means of the first input unit (2) and/or the second input unit (3) and target values of the functions can be set by means of the first input unit (2) and/or the second input unit (3) wherein the functions and/or target values can be displayed on the touch sensitive screen.

No. of Pages : 23 No. of Claims : 9

(12) PATENT APPLICATION PUBLICATION
(19) INDIA
(22) Date of filing of Application :05/12/2012
(21) Application No.10582/DELNP/2012 A
(43) Publication Date : 05/09/2014

(54) Title of the invention : METHODS AND HELPER VIRUSES FOR THE GENERATION OF RNA VIRUS

(51) International classification :C12N7/02,C12N15/86,C07K14/11
(31) Priority Document No :10164779.0
(32) Priority Date :02/06/2010
(33) Name of priority country :EPO
(86) International Application No :PCT/EP2011/059284
Filing Date :06/06/2011
(87) International Publication No :WO 2011/151470
(61) Patent of Addition to Application Number :NA
Filing Date :NA
(62) Divisional to Application Number :NA
Filing Date :NA

(71)**Name of Applicant :**
1)AVIR GREEN HILLS BIOTECHNOLOGY RESEARCH DEVELOPMENT TRADE AG
Address of Applicant :Forsthausgasse 11 A 1200 Vienna Austria
(72)**Name of Inventor :**
1)MUSTER Thomas
2)EGOROV Andrej
3)WOLSCHEK Markus

(57) Abstract :
The present invention provides a method for generating negative stranded segmented RNA viruses using linear expression constructs in the presence of helper virus which comprises at least one amino acid modification within the N terminal cytoplasmic region of the NA protein.

No. of Pages : 38 No. of Claims : 21

(12) PATENT APPLICATION PUBLICATION
(19) INDIA
(22) Date of filing of Application :23/11/2012
(21) Application No.10214/DELNP/2012 A
(43) Publication Date : 05/09/2014

(54) Title of the invention : ROTOR COMPRISING AN ELECTRICAL CLAMP CONNECTION

(51) International classification :H02K13/04,H01R39/32
(31) Priority Document No :10 2010 029 543.4
(32) Priority Date :01/06/2010
(33) Name of priority country :Germany
(86) International Application No :PCT/EP2011/055877
Filing Date :14/04/2011
(87) International Publication No :WO 2011/151100
(61) Patent of Addition to Application Number :NA
Filing Date :NA
(62) Divisional to Application Number :NA
Filing Date :NA

(71)**Name of Applicant :**
1)ROBERT BOSCH GMBH
Address of Applicant :Postfach 30 02 20 70442 Stuttgart Germany
(72)**Name of Inventor :**
1)BAUER Bertram
2)ERNZER Marc

(57) Abstract :
A ROTOR OF AN ELECTRIC MOTOR COMPRISES A COMMUTATOR HAVING A CONDUCTIVE SEGMENT, A WINDING HAVING A WINDING WIRE EXTENDING IN AN AXIAL DIRECTION OF THE ROTOR IN A CONNECTING REGION OF THE WINDING, AND A CONTACT ELEMENT FOR ELECTRICALLY CONNECTING THE CONDUCTIVE SEGMENT TO THE WINDING WIRE. THE CONTACT ELEMENT COMPRISES A LONGITUDINALLY SLOTTED SLEEVE HAVING TWO OPPOSITE LIMBS.

No. of Pages : 15 No. of Claims : 9

(12) PATENT APPLICATION PUBLICATION
(19) INDIA
(22) Date of filing of Application :23/11/2012
(21) Application No.10216/DELNP/2012 A
(43) Publication Date : 05/09/2014

(54) Title of the invention : PROCESSING DEVICE

(51) International classification :G06F9/445,G06F21/00
(31) Priority Document No :10164806.1
(32) Priority Date :03/06/2010
(33) Name of priority country :EPO
(86) International Application No :PCT/EP2011/058333
Filing Date :23/05/2011
(87) International Publication No :WO 2011/151211
(61) Patent of Addition to Application Number :NA
Filing Date :NA
(62) Divisional to Application Number :NA
Filing Date :NA

(71)**Name of Applicant :**
1)TELEFONAKTIEBOLAGET L M ERICSSON (PUBL)
Address of Applicant :S 164 83 Stockholm Sweden
(72)**Name of Inventor :**
1)SMEETS Bernard
2)EKDAHL Patrik

(57) Abstract :
Disclosed herein is a processing device comprising a secured execution environment comprising means for bringing the processing device into a predetermined operational state; and a timer; a communication interface for data communication between the processing device and a remote device management system external to the processing device; wherein the secured execution environment is configured responsive to an expiry of the timer to bring the processing device into said predetermined operational state; and responsive to a receipt from the remote device management system via said communications interface of a predetermined signal to restart the timer.

No. of Pages : 27 No. of Claims : 17

(12) PATENT APPLICATION PUBLICATION
(19) INDIA
(22) Date of filing of Application :23/11/2012

(21) Application No.10217/DELNP/2012 A
(43) Publication Date : 05/09/2014

(54) Title of the invention : RETUNING GAPS AND SCHEDULING GAPS IN DISCONTINUOUS RECEPTION

(51) International classification	:H04L27/26,H04W52/02,H04W72/04
(31) Priority Document No	:61/347997
(32) Priority Date	:25/05/2010
(33) Name of priority country	:U.S.A.
(86) International Application No	:PCT/US2011/037717
Filing Date	:24/05/2011
(87) International Publication No	:WO 2011/149920
(61) Patent of Addition to Application Number	:NA
Filing Date	:NA
(62) Divisional to Application Number	:NA
Filing Date	:NA

(71)**Name of Applicant :**
1)INTERDIGITAL PATENT HOLDINGS INC.
Address of Applicant :3411 Silverside Road Concord Plaza Suite 105 Hagley Building Wilmington Delaware 19810 U.S.A.
(72)**Name of Inventor :**
1)TERRY Stephen E.
2)PELLETIER Ghyslain
3)MARINIER Paul

(57) Abstract :
A method for scheduling a time when a retuning gap occurs by a wireless transmit/receive unit includes detecting a retuning triggering event; determining a period of time when a retuning gap occurs on a condition that the triggering event is detected; and performing radio frequency front end retuning during the retuning gap.

No. of Pages : 68 No. of Claims : 20

(12) PATENT APPLICATION PUBLICATION
(19) INDIA
(22) Date of filing of Application :30/11/2012
(21) Application No.10457/DELNP/2012 A
(43) Publication Date : 05/09/2014

(54) Title of the invention : FILAMENTOUS FUNGI HAVING AN ALTERED VISCOSITY PHENOTYPE

(51) International classification :C12N15/31,C07K14/37,C12R1/885
(31) Priority Document No :61/377030
(32) Priority Date :25/08/2010
(33) Name of priority country :U.S.A.
(86) International Application No :PCT/US2011/049164
Filing Date :25/08/2011
(87) International Publication No :WO 2012/027580
(61) Patent of Addition to Application Number :NA
Filing Date :NA
(62) Divisional to Application Number :NA
Filing Date :NA

(71)**Name of Applicant :**
1)DANISCO US INC.
Address of Applicant :925 Page Mill Road Palo Alto California 94304 U.S.A.
(72)**Name of Inventor :**
1)DODGE Timothy C.
2)VIRAG Aleksandra
3)WARD Michael

(57) Abstract :
Described are compositions and methods relating variant filamentous fungi having altered growth characteristics. Such variants are well suited for growth in submerged cultures . for the large scale production of enzymes and other proteins for commercial applications.

No. of Pages : 89 No. of Claims : 46

(12) PATENT APPLICATION PUBLICATION
(21) Application No.10459/DELNP/2012 A
(19) INDIA
(22) Date of filing of Application :30/11/2012
(43) Publication Date : 05/09/2014

(54) Title of the invention : DEVICE FOR TRANSMITTING A MOVEMENT FOR SHIFTING GEARS IN A MOTOR VEHICLE GEARBOX

(51) International classification :F16H63/20,F16H59/02
(31) Priority Document No :1054286
(32) Priority Date :02/06/2010
(33) Name of priority country :France
(86) International Application No :PCT/FR2011/051245
Filing Date :31/05/2011
(87) International Publication No :WO 2011/151593
(61) Patent of Addition to Application Number :NA
Filing Date :NA
(62) Divisional to Application Number :NA
Filing Date :NA

(71)**Name of Applicant :**
1)DURA AUTOMOTIVE SYSTEMS SAS
Address of Applicant :14 parc Burospace Route de Gisy F 91570 Bi¨vres France
(72)**Name of Inventor :**
1)BLANC Hugues
2)MAITRE Sbastien

(57) Abstract :
The invention relates to a device which includes at least one insert, moulded from a casting in a body (4) made of a thermoplastic resin, the modulus of elasticity of said insert being at least twice as high as that of the thermoplastic resin and shaped such as to form a gear shift finger (1) suitable for engaging with a notch of a selected crosshead, said thermoplastic resin being suitable for Connecting the function(s) performed by the insert(s).

No. of Pages : 10 No. of Claims : 8

(12) PATENT APPLICATION PUBLICATION
(19) INDIA
(22) Date of filing of Application :04/01/2013
(21) Application No.107/DELNP/2013 A
(43) Publication Date : 05/09/2014

(54) Title of the invention : HYDROPHILIC GELS FROM POLYALKYLETHER BASED PHOTOINITIATORS

(51) International classification :C08F2/50,C08J3/28,C08J3/075
(31) Priority Document No :PA 2010 70282
(32) Priority Date :22/06/2010
(33) Name of priority country :Denmark
(86) International Application No :PCT/DK2011/050226
Filing Date :22/06/2011
(87) International Publication No :WO 2011/160638
(61) Patent of Addition to Application Number :NA
Filing Date :NA
(62) Divisional to Application Number :NA
Filing Date :NA

(71)**Name of Applicant :**
1)COLOPLAST A/S
Address of Applicant :Holtedam 1 DK 3050 Humlebaek Denmark
(72)**Name of Inventor :**
1)NIELSEN Christian B.
2)MADSEN Niels Joergen

(57) Abstract :
The invention provides a method for the manufacture of a catheter comprising a hydrophilic gel. The method comprising the steps of combining a polymeric photoinitiator of the general formula (I): R(Ai) (R2(A2)m-O)o-(Rs(A3)m O) R(A) (I) with one or more gel forming polymers and/or gel forming monomers to form a matrix composition curing the matrix composition by exposing it to UV radiation exposing the matrix composition to a swelling medium and incorporating the hydrophilic gel into a catheter. The invention also provides autocuring of the polymeric photoinitiator (I) to provide a gel precursor a hydrophilic gel and a catheter comprising or coated with the hydrophilic gel of the invention.

No. of Pages : 43 No. of Claims : 37

(12) PATENT APPLICATION PUBLICATION
(19) INDIA
(22) Date of filing of Application :03/12/2012
(21) Application No.10507/DELNP/2012 A
(43) Publication Date : 05/09/2014

(54) Title of the invention : MULTI COMPARTMENT POUCH

(51) International classification :C11D3/37,C11D17/04
(31) Priority Document No :10165935.7
(32) Priority Date :15/06/2010
(33) Name of priority country :EPO
(86) International Application No :PCT/US2011/039269
Filing Date :06/06/2011
(87) International Publication No :WO 2011/159510
(61) Patent of Addition to Application Number :NA
Filing Date :NA
(62) Divisional to Application Number :NA
Filing Date :NA

(71)**Name of Applicant :**
1)THE PROCTER & GAMBLE COMPANY
Address of Applicant :One Procter & Gamble Plaza Cincinnati Ohio 45202 U.S.A.
(72)**Name of Inventor :**
1)RICCI Carlo
2)SARCINELLI Luca

(57) Abstract :
A multi compartment pouch comprising a first compartment and a second compartment wherein the first compartment comprises a solid composition wherein the solid composition comprises; an oxygen bleach source; a bleach activator; a polycarboxylate polymer; and the second compartment comprises a liquid composition wherein the liquid composition comprises; a low molecular weight solvent.

No. of Pages : 23 No. of Claims : 13

(12) PATENT APPLICATION PUBLICATION
(19) INDIA
(22) Date of filing of Application :03/12/2012
(21) Application No.10508/DELNP/2012 A
(43) Publication Date : 05/09/2014

(54) Title of the invention : ANTIFOULING COATING

(51) International classification :C09D5/00
(31) Priority Document No :10164995.2
(32) Priority Date :04/06/2010
(33) Name of priority country :EPO
(86) International Application No :PCT/EP2011/059184
Filing Date :03/06/2011
(87) International Publication No :WO 2011/151438
(61) Patent of Addition to Application Number :NA
Filing Date :NA
(62) Divisional to Application Number :NA
Filing Date :NA

(71)**Name of Applicant :**
1)JOTUN A/S
Address of Applicant :P.O. Box 2021 N 3202 Sandefjord Norway
(72)**Name of Inventor :**
1)ENSTR–M Alexander
2)JONSEN Henning
3)WINANDER Cecilia
4)ELKENES Morten

(57) Abstract :
A binder for an antifouling composition comprising a mixture of: (i) at least one organic monofunctional acid or a salt thereof; (ii) at least one organic polyfunctional acid having a molecular weight of 300 to less than 1000 or a salt thereof e.g. a dimerised trimerised or oligomerised fatty acid or resin acid; and (iii) at least one metal compound.

No. of Pages : 31 No. of Claims : 14

(12) PATENT APPLICATION PUBLICATION
(19) INDIA
(22) Date of filing of Application :11/12/2012
(21) Application No.10758/DELNP/2012 A
(43) Publication Date : 05/09/2014

(54) Title of the invention : DEHYDRATION OF ALCOHOLS ON POISONED ACIDIC CATALYSTS

(51) International classification :C07C1/24,C07C11/04
(31) Priority Document No :10166980.2
(32) Priority Date :23/06/2010
(33) Name of priority country :EPO
(86) International Application No :PCT/EP2011/060212
Filing Date :20/06/2011
(87) International Publication No :WO 2011/161045
(61) Patent of Addition to Application Number :NA
Filing Date :NA
(62) Divisional to Application Number :NA
Filing Date :NA

(71)**Name of Applicant :**
1)TOTAL RESEARCH & TECHNOLOGY FELUY
Address of Applicant :Zone Industrielle C B 7181 Seneffe Belgium
(72)**Name of Inventor :**
1)MINOUX Delphine
2)ADAM Cindy
3)NESTERENKO Nikolai
4)VAN DONK Sander
5)DATH Jean Pierre
6)VERMEIREN Walter

(57) Abstract :
The present invention is a process for the dehydration of an alcohol having at least 2 carbon atoms to make the corresponding olefin comprising: a) introducing in a reactor a stream (A) comprising at least an alcohol optionally water optionally an inert component b) contacting said stream with an acidic catalyst in said reactor at conditions effective to dehydrate at least a portion of the alcohol to make an olefin c) recovering from said reactor a stream (B) comprising : the inert component and at least an olefin water and optionally unconverted alcohol d) optionally fractionating the stream (B) to recover the unconverted alcohol and recycling said unconverted alcohol to the reactor of step a) e) optionally fractionating the stream (B) to recover the inert component water and the olefin and optionally recycling said inert component and optionally a part of the water to the reactor of step a) wherein f) an effective amount of a component capable to neutralize a part of the catalyst active site is introduced in stream (A) or directly in the dehydration reactor and g) optionally the temperature of the dehydration reactor is adjusted to increase the alcohol conversion or the olefin yield or both. In another embodiment at step f) an effective amount of a component capable to increase the selectivity for the desired corresponding olefin is introduced in stream (A) or directly in the dehydration reactor. The component introcuced at step f) can be chosen from the group consisting of ammonia organic ammonium salts hydrazine nitriles amines (including pyridines pyrrols pyrrolydones and pyrrolidines) amides imines di imines imides cyanates isocyanates nitrites and nitroso compounds aldehydes ketones carboxylic esters and their corresponding thio compounds (thiols sulphides disulfides).

No. of Pages : 33 No. of Claims : 8

(12) PATENT APPLICATION PUBLICATION
(19) INDIA
(22) Date of filing of Application :11/12/2012
(21) Application No.10759/DELNP/2012 A
(43) Publication Date : 05/09/2014

(54) Title of the invention : COMPACTING DEVICE

(51) International classification :B22F3/16
(31) Priority Document No :A 947/2010
(32) Priority Date :10/06/2010
(33) Name of priority country :Austria
(86) International Application No :PCT/AT2011/000260
Filing Date :09/06/2011
(87) International Publication No :WO 2011/153574
(61) Patent of Addition to Application Number :NA
Filing Date :NA
(62) Divisional to Application Number :NA
Filing Date :NA

(71)**Name of Applicant :**
1)MIBA SINTER AUSTRIA GMBH
Address of Applicant :Dr. Mitterbauer Strasse 3 A 4663 Laakirchen Austria
(72)**Name of Inventor :**
1)DUMANSKI Christian
2)SPITALER Robert

(57) Abstract :
The invention relates to a tool for compacting the surface of a powder metallurgically produced component (2) comprising a female die (1) and a male die (20) a clearance (5) which extends from a first female die opening (6) to a second female die opening (8) being arranged in the female die (1) and having a wall surface (10) for bearing against the component (2) and the male die (20) having a male die length (23) and a male die surface (21) wherein an inside diameter (12) of the clearance (5) in the female die (1) becomes smaller from the first female die opening (6) in the direction of the second female die opening (8) or an outside diameter (22) of the male die (20) becomes greater over the male die length (23) and wherein a compacting element (17) is arranged on the wall surface (10) of the female die (1) or on the male die surface (21). The compacting element (17) is formed with a thread like profile.

No. of Pages : 20 No. of Claims : 9

(12) PATENT APPLICATION PUBLICATION
(19) INDIA
(22) Date of filing of Application :04/01/2013
(21) Application No.102/DELNP/2013 A
(43) Publication Date : 05/09/2014

(54) Title of the invention : AGENT FOR TREATING HCV INFECTION

(51) International classification :C07D233/61,A61K31/4164,A61K31/4178
(31) Priority Document No :2010135742
(32) Priority Date :15/06/2010
(33) Name of priority country :Japan
(86) International Application No :PCT/JP2011/063602
Filing Date :14/06/2011
(87) International Publication No :WO 2011/158833
(61) Patent of Addition to Application Number :NA
Filing Date :NA
(62) Divisional to Application Number :NA
Filing Date :NA

(71)**Name of Applicant :**
1)Eisai R&D Management Co. Ltd.
Address of Applicant :6 10 Koishikawa 4 chome Bunkyo ku Tokyo 1128088 Japan
(72)**Name of Inventor :**
1)YANAGIMACHI Mamoru
2)INO Mitsuhiro

(57) Abstract :
Provided is an imidazolylbenzene compound or salt thereof that controls HCV replication and in addition is particularly capable of strongly controlling HCV replication, and is very effective in the prevention and treatment of HCV infection when used in combination with another agent for treating HCV infection such as Interferon.

No. of Pages : 78 No. of Claims : 18

(12) PATENT APPLICATION PUBLICATION
(19) INDIA
(22) Date of filing of Application :23/11/2012
(21) Application No.10200/DELNP/2012 A
(43) Publication Date : 05/09/2014

(54) Title of the invention : VEHICLE CHARGER MOUNTING STRUCTURE

(51) International classification :B60K1/04,B60K6/40,B60L11/18
(31) Priority Document No :2010-124238
(32) Priority Date :31/05/2010
(33) Name of priority country :Japan
(86) International Application No :PCT/JP2011/060324
Filing Date :27/04/2011
(87) International Publication No :WO 2011/152164
(61) Patent of Addition to Application Number :NA
Filing Date :NA
(62) Divisional to Application Number :NA
Filing Date :NA

(71)**Name of Applicant :**
1)SUZUKI MOTOR CORPORATION
Address of Applicant :300 Takatsuka cho Minami ku Hamamatsu shi Shizuoka 4328611 Japan
(72)**Name of Inventor :**
1)SATO Kenji
2)SUZUKI Seiko

(57) Abstract :
A vehicle charger mounting structure [図1] comprises: a system circuit (7) including in-vehicle batteries (5a, 5b) and constituting a high voltage cir cuit; and a charger (8) for charging the in-vehicle 外部batteries (5a, 5b) with externally supplied power. While a relay (20), which i s controlled t o operate i n an open state except during a charging period, i s dis posed between the in-vehicle batteries (5a, 5b) and the charger (8) and i s housed and provided in a chassis (21) different from that o f the charger (8), the charger (8) i s housed and provided i n a housing space (23) provided on a vehicle-body structural portion (22). Even when the vehicle-body structural portion (22) i s deformed by a collision or the like, since the charger (8) housed in the housing space (23) i s disconnected from the system circuit (7) con stituting the high voltage circuit by the relay (20) when the vehicle i s i n motion, that is, except during a charging period, i t i s possible t o prevent a sec FIG. : ondary damage such as leakage.

No. of Pages : 19 No. of Claims : 5

(12) PATENT APPLICATION PUBLICATION
(19) INDIA
(22) Date of filing of Application :11/12/2012

(21) Application No.10760/DELNP/2012 A
(43) Publication Date : 05/09/2014

(54) Title of the invention : PIPERIDINONE DERIVATIVES AS MDM2 INHIBITORS FOR THE TREATMENT OF CANCER

(51) International classification	:C07D211/40,C07D401/04,C07D401/06
(31) Priority Document No	:61/351827
(32) Priority Date	:04/06/2010
(33) Name of priority country	:U.S.A.
(86) International Application No	:PCT/US2011/039184
Filing Date	:03/06/2011
(87) International Publication No	:WO 2011/153509
(61) Patent of Addition to Application Number	:NA
Filing Date	:NA
(62) Divisional to Application Number	:NA
Filing Date	:NA

(71)**Name of Applicant :**
1)AMGEN INC.
Address of Applicant :One Amgen Center Drive M/s 28 2 c Thousand Oaks California 91320 U.S.A.
(72)**Name of Inventor :**
1)BARTBERGER Michael David
2)GONZALEZ BUENROSTRO Ana
3)BECK Hilary Plake
4)CHEN Xiaoqi
5)CONNORS Richard Victor
6)DEIGNAN Jeffrey
7)DUQUETTE Jason
8)EKSTEROWICZ John
9)FISHER Benjamin
10)FOX Brian Matthew
11)FU Jiasheng
12)FU Zice
13)GONZALEZ LOPEZ DE TURISO Felix
14)GRIBBLE JR. Michael William
15)GUSTIN Darin James
16)HEATH Julie Anne
17)HUANG Xin
18)JIAO Xianyun
19)JOHNSON Michael
20)KAYSER Frank
21)KOPECKY David John
22)LAI Sujen
23)LI Yihong
24)LI Zhihong
25)LIU Jiwen
26)LOW Jonathan Dante
27)LUCAS Brian Stuart
28)MA Zhihua
29)MCGEE Lawrence
30)MCINTOSH Joel
31)MCMINN Dustin
32)MEDINA Julio Cesar
33)MIHALIC Jeffrey Thomas
34)OLSON Steven Howard
35)REW Yosup
36)ROVETO Philip Marley
37)SUN Daqing
38)WANG Xiaodong
39)WANG Yingcai
40)YAN Xuelei
41)YU Ming
42)ZHU Jiang

(57) Abstract :
The present invention provides MDM2 inhibitor compounds of Formula (I) wherein the variables are defined above which compounds are useful as therapeutic agents particularly for the treatment of cancers. The present invention also relates to pharmaceutical compositions that contain an MDM2 inhibitor.

No. of Pages : 930 No. of Claims : 30

(12) PATENT APPLICATION PUBLICATION
(19) INDIA
(22) Date of filing of Application :11/12/2012
(21) Application No.10761/DELNP/2012 A
(43) Publication Date : 05/09/2014

(54) Title of the invention : DEVICE FOR VENTILATING AN EXHAUST GAS AFTER TREATMENT SYSTEM

(51) International classification :F01N3/20
(31) Priority Document No :10 2010 030 050.0
(32) Priority Date :14/06/2010
(33) Name of priority country :Germany
(86) International Application No :PCT/EP2011/058093
Filing Date :19/05/2011
(87) International Publication No :WO 2011/157508
(61) Patent of Addition to Application Number :NA
Filing Date :NA
(62) Divisional to Application Number :NA
Filing Date :NA

(71)**Name of Applicant :**
1)ROBERT BOSCH GMBH
Address of Applicant :Postfach 30 02 20 70442 Stuttgart Germany
(72)**Name of Inventor :**
1)HAEBERER Rainer

(57) Abstract :
The invention relates to a device for ventilating an exhaust gas after treatment system (10) with which a freezable operating/auxiliary agent in particular a reduction agent is metered into an exhaust tract (12) of an internal combustion engine. A hydraulic spring accumulator (60 66 68) stores energy during operation with system pressure. Upon shut down of the internal combustion engine said accumulator releases the energy without current such that a vacuum for suctioning the operating/auxiliary agent out of components of the exhaust gas after treatment system is generated.

No. of Pages : 20 No. of Claims : 10

(12) PATENT APPLICATION PUBLICATION
(19) INDIA
(22) Date of filing of Application :11/12/2012
(21) Application No.10763/DELNP/2012 A
(43) Publication Date : 05/09/2014

(54) Title of the invention : DEVICE AND METHOD FOR GENERATING A COLLIMATED BEAM OF ACOUSTIC ENERGY IN A BOREHOLE

(51) International classification :G01V1/46
(31) Priority Document No :12/793407
(32) Priority Date :03/06/2010
(33) Name of priority country :U.S.A.
(86) International Application No :PCT/US2011/035358
Filing Date :05/05/2011
(87) International Publication No :WO 2011/152954
(61) Patent of Addition to Application Number :NA
Filing Date :NA
(62) Divisional to Application Number :NA
Filing Date :NA

(71)**Name of Applicant :**
1)CHEVRON U.S.A. INC.
Address of Applicant :6001 Bollinger Canyon Road San Ramon California 94583 U.S.A.
2)LOS ALAMOS NATIONAL SECURITY LLC
(72)**Name of Inventor :**
1)VU Cung Khac
2)SINHA Dipen N.
3)PANTEA Cristian
4)NIHEI Kurt T.
5)SCHMITT Denis P.
6)SKELT Christopher

(57) Abstract :
In some aspects of the invention a method of generating a beam of acoustic energy in a borehole is disclosed. The method includes generating a first acoustic wave at a first frequency; generating a second acoustic wave at a second frequency different than the first frequency wherein the first acoustic wave and second acoustic wave are generated by at least one transducer carried by a tool located within the borehole; transmitting the first and the second acoustic waves into an acoustically non linear medium wherein the composition of the non linear medium produces a collimated beam by a non linear mixing of the first and second acoustic waves wherein the collimated beam has a frequency based upon a difference between the first frequency range and the second frequency and wherein the non linear medium has a velocity of sound between 100 m/s and 800 m/s.

No. of Pages : 67 No. of Claims : 18

(12) PATENT APPLICATION PUBLICATION
(19) INDIA
(22) Date of filing of Application :26/11/2012
(21) Application No.10273/DELNP/2012 A
(43) Publication Date : 05/09/2014

(54) Title of the invention : DEVICE AND METHOD FOR DETECTING AND MONITORING INGREDIENTS OR PROPERTIES OF A MEASUREMENT MEDIUM IN PARTICULAR OF PHYSIOLOGICAL BLOOD VALUES

(51) International classification :A61B5/00,G01J3/02,G01J3/28
(31) Priority Document No :10166854.9
(32) Priority Date :22/06/2010
(33) Name of priority country :EPO
(86) International Application No :PCT/EP2011/060337
Filing Date :21/06/2011
(87) International Publication No :WO 2011/161102
(61) Patent of Addition to Application Number :NA
Filing Date :NA
(62) Divisional to Application Number :NA
Filing Date :NA

(71)**Name of Applicant :**
1)SENSPEC GMBH
Address of Applicant :Alter Hafen S¼d 4 18069 Rostock Germany
(72)**Name of Inventor :**
1)KULCKE Axel

(57) Abstract :
The invention relates to a device for detecting and monitoring ingredients or properties of a measurement medium for example physiological blood values wherein said device contains a light source (20) for generating broad spectrum measurement light (2) and for acting on a measurement area (3) and means (9) for fanning out the analysis light (4) reflected by the measurement area (3). The device also has a sensor array (11) for picking up the fanned light. The sensor array (11) the light source (20) and the means for dispersing the analysis light (4) are arranged as a compact unit in a housing.

No. of Pages : 76 No. of Claims : 24

(12) PATENT APPLICATION PUBLICATION
(19) INDIA
(22) Date of filing of Application :26/11/2012
(21) Application No.10274/DELNP/2012 A
(43) Publication Date : 05/09/2014

(54) Title of the invention : HYBRID CONSTRUCTION MACHINE

(51) International classification :E02F9/20,B60L11/14,F15B11/08
(31) Priority Document No :2010228961
(32) Priority Date :08/10/2010
(33) Name of priority country :Japan
(86) International Application No :PCT/JP2011/072735
Filing Date :03/10/2011
(87) International Publication No :WO 2012/046677
(61) Patent of Addition to Application Number :NA
Filing Date :NA
(62) Divisional to Application Number :NA
Filing Date :NA

(71)**Name of Applicant :**
1)HITACHI CONSTRUCTION MACHINERY CO. LTD.
Address of Applicant :5 1 Koraku 2 chome Bunkyo ku Tokyo 1128563 Japan
(72)**Name of Inventor :**
1)HIROKI Takenori
2)EDAMURA Manabu
3)SUGIURA Manabu
4)ISHIKAWA Kouji
5)SATAKE Hidetoshi

(57) Abstract :
Provided is a hybrid construction machine capable of letting the operator immediately stop the swing structure by performing a stopping operation for ordinary construction machines even when the swing structure moves differently from the operators will for some reason. The hybrid construction machine comprises: an inverter controller which outputs a PWM signal to an inverter and thereby controls the revolution speed of an electric motor; a first electric circuit including blocking means which blocks the PWM signal outputted from the inverter controller to the inverter in response to either an immobilization selection inputted through a gate lock lever switch or an OFF selection inputted through an ignition switch; and a second electric circuit including a swing brake solenoid valve which activates a swing brake in response to either the immobilization selection inputted through the gate lock lever switch or the OFF selection inputted through the ignition switch.

No. of Pages : 44 No. of Claims : 3

(12) PATENT APPLICATION PUBLICATION
(19) INDIA
(22) Date of filing of Application :03/12/2012
(21) Application No.10509/DELNP/2012 A
(43) Publication Date : 05/09/2014

(54) Title of the invention : HYDRAULIC ELEMENT

(51) International classification :F16D48/02
(31) Priority Document No :10 2010 025 442.8
(32) Priority Date :29/06/2010
(33) Name of priority country :Germany
(86) International Application No :PCT/DE2011/001268
Filing Date :16/06/2011
(87) International Publication No :WO 2012/000479
(61) Patent of Addition to Application Number :NA
Filing Date :NA
(62) Divisional to Application Number :NA
Filing Date :NA

(71)**Name of Applicant :**
1)SCHAEFFLER TECHNOLOGIES AG & CO. KG
Address of Applicant :Industriestrae 1 3 91074 Herzogenaurach Germany
(72)**Name of Inventor :**
1)GRABENST„TTER Jan

(57) Abstract :
The invention disclosure relates to a hydraulic element (18) in particular for arrangement in a pressure line (3) between a master cylinder (2) and a slave cylinder of a hydraulic clutch actuating means (1) comprising a housing (19) which has a hydraulic connection on the master cylinder side and a hydraulic connection on the slave cylinder side and which housing (19) accommodates a valve arrangement (29) with a valve body. According to the invention the valve body has a bendable sealing element (32) as a result of the bending of which an opening (33) which is arranged in the valve body can be opened or closed as a function of the pressure. As a result the hydraulic element can be produced inexpensively and with a compact design and has improved functionality.

No. of Pages : 17 No. of Claims : 10

(12) PATENT APPLICATION PUBLICATION
(19) INDIA
(22) Date of filing of Application :11/12/2012
(21) Application No.10774/DELNP/2012 A
(43) Publication Date : 05/09/2014

(54) Title of the invention : METHOD FOR ISOLATING A CHEMOTHERAPEUTIC AGENT RESISTANT CANCER CELL WITH STEM CELL PROPERTIES

(51) International classification :A01N43/02
(31) Priority Document No :61/458391
(32) Priority Date :23/11/2010
(33) Name of priority country :U.S.A.
(86) International Application No :PCT/US2011/061812
Filing Date :22/11/2011
(87) International Publication No :WO 2012/071394
(61) Patent of Addition to Application Number :NA
Filing Date :NA
(62) Divisional to Application Number :NA
Filing Date :NA

(71)**Name of Applicant :**
1)THE ROGOSIN INSTITUTE INC.
Address of Applicant :505 East 70th Street New York NY 10021 U.S.A.
(72)**Name of Inventor :**
1)GAZDA Lawrence
2)SMITH Barry

(57) Abstract :
The invention relates to the use of encapsulates of cancer cells in agarose coated agarose containing beads for isolating chemotherapeutic resistant cells which have at least one stem cell property such as expression of OCT4. The cells thus isolated are also a feature of the invention as is a method for screening for potential therapeutic

No. of Pages : 13 No. of Claims : 14

(12) PATENT APPLICATION PUBLICATION
(19) INDIA
(22) Date of filing of Application :11/12/2012
(21) Application No.10775/DELNP/2012 A
(43) Publication Date : 05/09/2014

(54) Title of the invention : PHARMACEUTICAL FORMULATION IN THE FORM OF BILAYERED TABLETS COMPRISING HMG COA REDUCTASE INHIBITOR AND IRBESARTAN

(51) International classification :A61K9/24,A61K9/20,A61K31/415
(31) Priority Document No :1020100045636
(32) Priority Date :14/05/2010
(33) Name of priority country :Republic of Korea
(86) International Application No :PCT/KR2011/003549
Filing Date :13/05/2011
(87) International Publication No :WO 2011/142621
(61) Patent of Addition to Application Number :NA
Filing Date :NA
(62) Divisional to Application Number :NA
Filing Date :NA

(71)**Name of Applicant :**
1)HANMI SCIENCE CO. LTD.
Address of Applicant :550 Dongtangiheung ro Dongtan myeon Hwaseong si Gyeonggi do 445 813 Republic of Korea
(72)**Name of Inventor :**
1)KIM Yong Il
2)NA Young Jun
3)KIM Min Jung
4)KIM Young Hun
5)PARK Jae Hyun
6)WOO Jong Soo

(57) Abstract :
Provided is a pharmaceutical formulation in the form of bilayered tablets consisting of a first layer containing irbesartan or pharmaceutically acceptable salts thereof and a second layer containing an HMG CoA reductase inhibitor and a basic additive which can improve the dissolution rate and stability of irbesartan and an HMG CoA reductase inhibitor to enhance the bioavailability of the drug compared to conventional complex formulations and to minimize the generation of the related compounds thereby being effectively used as a stable and superior therapeutic agent for hypertension and hypercholesterolemia.

No. of Pages : 35 No. of Claims : 20

(12) PATENT APPLICATION PUBLICATION
(19) INDIA
(22) Date of filing of Application :11/12/2012
(21) Application No.10785/DELNP/2012 A
(43) Publication Date : 05/09/2014

(54) Title of the invention : NATURAL OIL BASED MARKING COMPOSITIONS AND THEIR METHODS OF MAKING

(51) International classification :C09D11/00,C09D13/00,C09D17/00
(31) Priority Document No :61/333814
(32) Priority Date :12/05/2010
(33) Name of priority country:U.S.A.
(86) International Application No :PCT/US2011/035293
Filing Date :05/05/2011
(87) International Publication No :WO 2011/143037
(61) Patent of Addition to Application Number :NA
Filing Date :NA
(62) Divisional to Application Number :NA
Filing Date :NA

(71)**Name of Applicant :**
1)ELEVANCE RENEWABLE SCIENCES INC.
Address of Applicant :2501 Davey Road Woodridge IL 60517 U.S.A.
(72)**Name of Inventor :**
1)MURPHY Timothy A.

(57) Abstract :
Natural oil based marking compositions and their methods of making are provided. The compositions comprise a lipid based wax having approximately 0 90 percent by weight triacylglycerides and approximately 10 99 percent by weight monoacylglycerides and diacylglycerides combined. The compositions also comprise approximately 1 40 percent by weight of a structuring agent. The methods comprise blending the composition by heating the lipid based wax and structuring agent at a sufficiently high temperature to destroy substantially all crystal structure within the lipid based wax. The methods further comprise pouring the composition into a mold having a surface and a core wherein the pouring is conducted at a temperature at least 5°C greater than the congeal point of the lipid based wax. The methods further comprise cooling the lipid based wax under conditions sufficient to cool the core to at least 5°C below the congeal point of the lipid based wax in approximately 30 90 minutes.

No. of Pages : 36 No. of Claims : 27

(12) PATENT APPLICATION PUBLICATION
(19) INDIA
(22) Date of filing of Application :11/12/2012
(21) Application No.10786/DELNP/2012 A
(43) Publication Date : 05/09/2014

(54) Title of the invention : SURGICAL DEVICE WITH REUSABLE HANDLE

(51) International classification :A61B17/29
(31) Priority Document No :12/797933
(32) Priority Date :10/06/2010
(33) Name of priority country :U.S.A.
(86) International Application No :PCT/US2011/038506
Filing Date :31/05/2011
(87) International Publication No :WO 2011/156168
(61) Patent of Addition to Application Number :NA
Filing Date :NA
(62) Divisional to Application Number :NA
Filing Date :NA

(71)**Name of Applicant :**
1)CAREFUSION 2200 INC.
Address of Applicant :3750 Torrey View Court San Diego CA 92130 U.S.A.
(72)**Name of Inventor :**
1)CHEN How Lun
2)CRUMLEY Jesse
3)LEONARD Robert F.

(57) Abstract :
A laparoscopic surgical device is provided including a removable tool comprising shaft having an outer shaft and an inner actuation rod that may be removably or permanently connected together. A handle of the device includes a two button mechanism for engaging and releasing the removable tool comprising shaft. The two button mechanism is configured to engage overlapping corresponding apertures of the outer shaft and the inner rod that extends through the outer shaft.

No. of Pages : 28 No. of Claims : 20

(12) PATENT APPLICATION PUBLICATION
(19) INDIA
(22) Date of filing of Application :11/12/2012
(21) Application No.10787/DELNP/2012 A
(43) Publication Date : 05/09/2014

(54) Title of the invention : COMBUSTION SYSTEM

(51) International classification :F23C9/08,F23C99/00,F23L7/00
(31) Priority Document No :2010137211
(32) Priority Date :16/06/2010
(33) Name of priority country :Japan
(86) International Application No :PCT/JP2011/050622
Filing Date :17/01/2011
(87) International Publication No :WO 2011/158521
(61) Patent of Addition to Application Number :NA
Filing Date :NA
(62) Divisional to Application Number :NA
Filing Date :NA

(71)**Name of Applicant :**
1)MITSUBISHI HEAVY INDUSTRIES LTD.
Address of Applicant :16 5 Konan 2 chome Minato ku Tokyo 1088215 Japan
(72)**Name of Inventor :**
1)MATSUDA Masahiko
2)SUGANUMA Hiroshi
3)ARUGA Takeshi
4)FUJIMURA Koutaro
5)DAIMARU Takuichiro

(57) Abstract :
Disclosed is a combustion system that enables reduction in nitrogen oxide discharged from exhaust gas. The combustion system comprises: a combustion furnace (2) which has a burner unit (2a) that supplies fuel and oxygen for combustion to inside a furnace a reduction region formed on the downstream side of the burner unit (2a) and where fuel is combusted and a combustion oxygen supply port (2b) which supplies the oxygen for combustion (21) so that unburned fuel that has passed through the reduction region is completely combusted; and a smoke removal device (9) that removes smoke from the exhaust gas that is discharged from the combustion furnace (2). The combustion system is characterized by part of the exhaust gas (22) diverted from between the combustion furnace (2) and the smoke removal device (9) being guided to the burner unit (2a) and part of the exhaust gas (23) diverted from the downstream side of the smoke removal device (9) being guided to the combustion oxygen supply port (2b).

No. of Pages : 28 No. of Claims : 5

(12) PATENT APPLICATION PUBLICATION
(21) Application No.10788/DELNP/2012 A
(19) INDIA
(22) Date of filing of Application :11/12/2012
(43) Publication Date : 05/09/2014

(54) Title of the invention : CUTTING INSERT AND INDEXABLE ROTARY CUTTING TOOL

(51) International classification :B23C5/20,B23C5/10
(31) Priority Document No :2010140511
(32) Priority Date :21/06/2010
(33) Name of priority country :Japan
(86) International Application No :PCT/JP2011/062657
Filing Date :02/06/2011
(87) International Publication No :WO 2011/162081
(61) Patent of Addition to Application Number :NA
Filing Date :NA
(62) Divisional to Application Number :NA
Filing Date :NA

(71)**Name of Applicant :**
1)TUNGALOY CORPORATION
Address of Applicant :11 1 Yoshima Kogyodanchi Iwaki shi Fukushima 9701144 Japan
(72)**Name of Inventor :**
1)YOSHIOKA Shirou

(57) Abstract :
PROVIDED ARE A CUTTING INSERT SUITABLE FOR POCKET MACHINING OF METAL MOLDS AND THE LIKE, AND AN INDEXABLE CUTTING TOOL THAT USES THE CUTTING INSERT. THE CUTTING INSERT (10) IS PROVIDED WITH: A RAKE FACE (14); A FLANK FACE (15); AND A MAJOR CUTTING EDGE (11) THAT IS FORMED ON THE INTERSECTING RIDGE OF THE RAKE FACE (14) AND THE FLANK FACE (15), AND THAT EXTENDS IN THE DIRECTION THAT INTERSECTS WITH THE CUTTING DIRECTION OF THE ROTARY CUTTING TOOL. AT LEAST ONE PARTITIONING SECTION (12) THAT IS NOT INVOLVED IN CUTTING IS PROVIDED IN THE MIDDLE OF SAID MAJOR CUTTING EDGE (11) IN A DIRECTION ALONG THE MAJOR CUTTING EDGE (11). THE MAJOR CUTTING EDGE (11) IS COMPOSED OF TWO FIRST CUTTING EDGES (11A) AND SECOND CUTTING EDGES (11B) SEPARATED BY THE PARTITIONING SECTION (12), AND IS CONFIGURED IN SUCH A MANNER THAT, WHEN THE CUTTING INSERT IS ATTACHED TO THE TOOL BODY (1) OF THE CUTTING TOOL, THE CUTTING ANGLES (1, 2) BETWEEN THE FIRST CUTTING EDGE (11A) AND THE SECOND CUTTING EDGE (11B) FALLS IN A RANGE OF 5° AND 20°.

No. of Pages : 29 No. of Claims : 5

(12) PATENT APPLICATION PUBLICATION
(19) INDIA
(22) Date of filing of Application :11/12/2012
(21) Application No.10764/DELNP/2012 A
(43) Publication Date : 05/09/2014

(54) Title of the invention : CONTROLLING H2 DISTRIBUTION IN A HORIZONTAL STIRRED BED REACTOR

(51) International classification :C08F10/00,C08F2/34,C08F2/00
(31) Priority Document No :61/397332
(32) Priority Date :10/06/2010
(33) Name of priority country :U.S.A.
(86) International Application No:PCT/US2011/001049
Filing Date :09/06/2011
(87) International Publication No :WO 2011/155999
(61) Patent of Addition to Application Number :NA
Filing Date :NA
(62) Divisional to Application Number :NA
Filing Date :NA

(71)**Name of Applicant :**
1)INEOS USA LLC
Address of Applicant :3030 Warrenville Road Suite 650 Lisle IL 60532 U.S.A.
(72)**Name of Inventor :**
1)VAN DER HAM Mattijs
2)PEYREGAIN Pierre Sere
3)STEPHENS William Daniel

(57) Abstract :
An olefin polymerization process comprises gas phase polymerization of at least one olefin monomer in more than one polymerization zones in one or more polymerization reactors using a high activity catalyst injected in the front end of the reactor to give solid polymer particles. According to the process of the invention different hydrogen to olefin ratios are controlled and applied to the reactor leading to the production of very different molecular weights and therefore broadening the molecular weight distribution of the polymer produced.

No. of Pages : 25 No. of Claims : 9

(12) PATENT APPLICATION PUBLICATION
(19) INDIA
(22) Date of filing of Application :11/12/2012
(21) Application No.10765/DELNP/2012 A
(43) Publication Date : 05/09/2014

(54) Title of the invention : DEVICE AND METHOD FOR GENERATING A COLLIMATED BEAM OF ACOUSTIC ENERGY IN A BOREHOLE

(51) International classification :G01V1/04,G01V1/40,G01V1/46
(31) Priority Document No :12/793420
(32) Priority Date :03/06/2010
(33) Name of priority country :U.S.A.
(86) International Application No :PCT/US2011/035608
Filing Date :06/05/2011
(87) International Publication No:WO 2011/152957
(61) Patent of Addition to Application Number :NA
Filing Date :NA
(62) Divisional to Application Number :NA
Filing Date :NA

(71)**Name of Applicant :**
1)CHEVRON U.S.A. INC.
Address of Applicant :6001 Bollinger Canyon Road San Ramon California 94583 U.S.A.
2)LOS ALAMOS NATIONAL SECURITY LLC
(72)**Name of Inventor :**
1)VU Cung Khac
2)SINHA Dipen N.
3)PANTEA Cristian
4)NIHEI Kurt T.
5)SCHMITT Denis P.
6)SKELT Christopher

(57) Abstract :
In some aspects of the invention a method of generating a beam of acoustic energy in a borehole is disclosed. The method includes generating a first broad band acoustic pulse at a first broad band frequency range having a first central frequency and a first bandwidth spread; generating a second broad band acoustic pulse at a second broad band frequency range different than the first frequency range having a second central frequency and a second bandwidth spread wherein the first acoustic pulse and second acoustic pulse are generated by at least one transducer arranged on a tool located within the borehole; and transmitting the first and the second broad band acoustic pulses into an acoustically non linear medium wherein the composition of the non linear medium produces a collimated pulse by a non linear mixing of the first and second acoustic pulses wherein the collimated pulse has a frequency equal to the difference in frequencies between the first central frequency and the second central frequency and a bandwidth spread equal to the sum of the first bandwidth spread and the second bandwidth spread.

No. of Pages : 67 No. of Claims : 18

(12) PATENT APPLICATION PUBLICATION
(19) INDIA
(22) Date of filing of Application :11/12/2012
(21) Application No.10766/DELNP/2012 A
(43) Publication Date : 05/09/2014

(54) Title of the invention : PROCESSES FOR PREPARING MACROLIDES AND KETOLIDES AND INTERMEDIATES THEREFOR

(51) International classification :A61K31/70
(31) Priority Document No :61/346664
(32) Priority Date :20/05/2010
(33) Name of priority country :U.S.A.
(86) International Application No :PCT/US2011/037330
Filing Date :20/05/2011
(87) International Publication No :WO 2011/146829
(61) Patent of Addition to Application Number :NA
Filing Date :NA
(62) Divisional to Application Number :NA
Filing Date :NA

(71)**Name of Applicant :**
1)CEMPRA PHARMACEUTICALS INC.
Address of Applicant :6340 Quadrangle Drive Suite 100 Chapel Hill NC 27517 U.S.A.
(72)**Name of Inventor :**
1)PEREIRA David E.

(57) Abstract :
The invention described herein pertains to processes for the preparation of macrolide antibacterial agents. In particular the invention pertains to processes for preparing macrolides and ketolides from erythromycin A.

No. of Pages : 28 No. of Claims : 41

(12) PATENT APPLICATION PUBLICATION
(19) INDIA
(22) Date of filing of Application :28/12/2012

(21) Application No.11331/DELNP/2012 A
(43) Publication Date : 05/09/2014

(54) Title of the invention : A FAN ASSEMBLY

(51) International classification	:F24F7/007,F04D25/08,F04D29/58
(31) Priority Document No	:1013263.7
(32) Priority Date	:06/08/2010
(33) Name of priority country	:U.K.
(86) International Application No	:PCT/GB2011/051247
Filing Date	:01/07/2011
(87) International Publication No	:WO 2012/017219
(61) Patent of Addition to Application Number	:NA
Filing Date	:NA
(62) Divisional to Application Number	:NA
Filing Date	:NA

(71)**Name of Applicant :**
1)DYSON TECHNOLOGY LIMITED
Address of Applicant :Tetbury Hill Malmesbury Wiltshire SN16 0RP U.K.
(72)**Name of Inventor :**
1)WALLACE John
2)CHOONG Chang Hin

(57) Abstract :
A fan assembly includes a motor driven impeller for creating an air flow and a casing including an interior passage for receiving the air flow and a plurality of air outlets for emitting the air flow from the casing. The casing defines and extends about an opening through which air from outside the casing is drawn by the air flow emitted from the air outlets. The fan assembly also includes at least one heater for heating at least a first portion of the air flow and means for diverting at least a second portion of the air flow away from said at least one heater. The plurality of outlets includes at least one first air outlet for emitting the relatively hot first portion of the air flow and at least one second air outlet for emitting the relatively cold second portion of the air flow. This second portion of the air flow may be directed over an external surface of the casing to keep that surface cool during use of the fan heater.

No. of Pages : 45 No. of Claims : 29

(12) PATENT APPLICATION PUBLICATION
(19) INDIA
(22) Date of filing of Application :28/12/2012

(21) Application No.11332/DELNP/2012 A
(43) Publication Date : 05/09/2014

(54) Title of the invention : IMPROVEMENTS RELATING TO WIND TURBINES

(51) International classification :F03D7/02
(31) Priority Document No :1012478.2
(32) Priority Date :26/07/2010
(33) Name of priority country :U.K.
(86) International Application No :PCT/DK2011/050291
Filing Date :26/07/2011
(87) International Publication No :WO 2012/013195
(61) Patent of Addition to Application Number :NA
Filing Date :NA
(62) Divisional to Application Number :NA
Filing Date :NA

(71)**Name of Applicant :**
1)VESTAS WIND SYSTEMS A/S
Address of Applicant :Hedeager 44 DK 8200 Aarhus N Denmark
(72)**Name of Inventor :**
1)WEDEL HEINEN Jens Jakob

(57) Abstract :
An upwind wind turbine comprising a tower and a rotor is described. The wind turbine additionally includes a pressure sensing device supported by the tower at a location within the wake of the rotor. The pressure sensing device is configured to sense air pressure and provide a signal indicative of the sensed air pressure to a wind turbine controller for use in controlling the rotor of the wind turbine.

No. of Pages : 24 No. of Claims : 20

(12) PATENT APPLICATION PUBLICATION
(19) INDIA
(22) Date of filing of Application :28/12/2012

(21) Application No.11334/DELNP/2012 A
(43) Publication Date : 05/09/2014

(54) Title of the invention : SCHEDULING OF USER TERMINALS IN COMMUNICATION NETWORK

(51) International classification :H04W72/12,H04W24/10,H04W76/04
(31) Priority Document No :NA
(32) Priority Date :NA
(33) Name of priority country :NA
(86) International Application No :PCT/EP2010/059299
Filing Date :30/06/2010
(87) International Publication No :WO 2012/000547
(61) Patent of Addition to Application Number :NA
Filing Date :NA
(62) Divisional to Application Number :NA
Filing Date :NA

(71)**Name of Applicant :**
1)NOKIA SIEMENS NETWORKS OY
Address of Applicant :Karaportti 3 FI 02610 Espoo Finland
(72)**Name of Inventor :**
1)ANAS Mohmmad
2)GOLDERER Ralf
3)HERRMANN Uwe
4)KROENER Hans
5)PAYER Wolfgang

(57) Abstract :
There is provided a method for scheduling user terminals for downlink transmission in a communication network the method comprising: determining a duration of a discontinuous reception cycle for a user terminal wherein the beginning of the cycle triggers a first active period during which the user terminal is in an active mode; and determining an interval between periodic channel quality indicator reports for the user terminal. The method further comprises aligning the discontinuous reception cycle with the interval between the periodic channel quality indicator reports such that the periodic channel quality indicator is transmitted within the first active period of the discontinuous reception cycle receiving the periodic channel quality indicator during the first active period of each discontinuous reception cycle thus obtaining an up to date channel quality indicator for the discontinuous reception cycle and scheduling the user terminals for downlink transmission by taking the received periodic channel quality indicator into account.

No. of Pages : 45 No. of Claims : 38

(12) PATENT APPLICATION PUBLICATION
(19) INDIA
(22) Date of filing of Application :28/12/2012
(21) Application No.11335/DELNP/2012 A
(43) Publication Date : 05/09/2014

(54) Title of the invention : METHOD FOR THE SURFACE TREATMENT OF A FLUID PRODUCT DISPENSING DEVICE

(51) International classification :C23C14/48,A61F9/00,A61L2/16
(31) Priority Document No :1055343
(32) Priority Date :02/07/2010
(33) Name of priority country :France
(86) International Application No :PCT/FR2011/051544
Filing Date :01/07/2011
(87) International Publication No :WO 2012/001325
(61) Patent of Addition to Application Number :NA
Filing Date :NA
(62) Divisional to Application Number :NA
Filing Date :NA

(71)**Name of Applicant :**
1)APTAR FRANCE SAS
Address of Applicant :Lieudit le Prieur F 27110 Le Neubourg France
(72)**Name of Inventor :**
1)BRUNA Pascal
2)BUSARDO Denis

(57) Abstract :
The invention relates to a method for the surface treatment of a fluid product dispensing device. The method comprises a step in which at least one surface to be treated of at least one part of the device in contact with the fluid product is subjected to ion implantation modification using multi energy and multi charged ion beams said modified surface having properties that restrict the formation of a biofilm and consequently the appearance and/or proliferation of bacteria on the modified surface. The multi charged ions are selected from among helium boron carbon nitrogen oxygen neon argon krypton and xenon and the ion implantation is performed at a depth of between 0 and 3 µm.

No. of Pages : 50 No. of Claims : 19

(12) PATENT APPLICATION PUBLICATION
(19) INDIA
(22) Date of filing of Application :28/12/2012
(21) Application No.11336/DELNP/2012 A
(43) Publication Date : 05/09/2014

(54) Title of the invention : METHOD FOR THE SURFACE TREATMENT OF A FLUID PRODUCT DISPENSING DEVICE

(51) International classification :C23C14/48,A61F9/00,A61L2/16
(31) Priority Document No :1055347
(32) Priority Date :02/07/2010
(33) Name of priority country :France
(86) International Application No :PCT/FR2011/051548
Filing Date :01/07/2011
(87) International Publication No :WO 2012/001328
(61) Patent of Addition to Application Number :NA
Filing Date :NA
(62) Divisional to Application Number :NA
Filing Date :NA

(71)**Name of Applicant :**
1)APTAR FRANCE SAS
Address of Applicant :Lieudit le Prieur F 27110 Le Neubourg France
(72)**Name of Inventor :**
1)BRUNA Pascal
2)BUSARDO Denis
3)GUERNALEC Frdric

(57) Abstract :
The invention relates to a method for the surface treatment of a fluid product dispensing device. The method comprises a step in which at least one surface to be treated of at least one part of the device in contact with the fluid product is subjected to ion implantation modification using multi energy and multi charged ion beams said modified surface to be treated having barrier properties preventing interactions between the fluid product and the modified treatment surface. The multi charged ions are selected from among helium boron carbon nitrogen oxygen neon argon krypton and xenon and the ion implantation is performed at a depth of between 0 and 3 µm.

No. of Pages : 35 No. of Claims : 21

(12) PATENT APPLICATION PUBLICATION
(19) INDIA
(22) Date of filing of Application :28/12/2012
(21) Application No.11337/DELNP/2012 A
(43) Publication Date : 05/09/2014

(54) Title of the invention : METHOD FOR TREATING AN ELASTOMERIC SURFACE OF A DEVICE FOR DISPENSING A FLUID PRODUCT

(51) International classification :C23C14/48,A61F9/00,A61L2/16
(31) Priority Document No :1055358
(32) Priority Date :02/07/2010
(33) Name of priority country :France
(86) International Application No :PCT/FR2011/051540
Filing Date :01/07/2011
(87) International Publication No :WO 2012/001321
(61) Patent of Addition to Application Number :NA
Filing Date :NA
(62) Divisional to Application Number :NA
Filing Date :NA

(71)**Name of Applicant :**
1)APTAR FRANCE SAS
Address of Applicant :Lieudit le Prieur F 27110 Le Neubourg France
(72)**Name of Inventor :**
1)LEGOGUELIN Marie
2)L‰ON‰ Patrice
3)BUSARDO Denis
4)GUERNALEC Frdric

(57) Abstract :
The invention relates to a method for treating an elastomeric surface of a device for dispensing a fluid product said method including a step of modifying by ion implantation using beams of ions having multiple charge states and multiple energy states at least one elastomeric surface to be treated of said device said modified elastomeric surface limiting the adhesion of the elastomeric surfaces during the manufacturing and/or assembly phases said ions having multiple charge states being selected from among those of helium (He) nitrogen (N) oxygen (O) neon (Ne) argon (AR) krypton (Kr) and xenon (Xe) and the ion implantation being carried out at a depth of 0 to 3 µm.

No. of Pages : 34 No. of Claims : 23

(12) PATENT APPLICATION PUBLICATION
(19) INDIA
(22) Date of filing of Application :27/11/2012
(21) Application No.10295/DELNP/2012 A
(43) Publication Date : 05/09/2014

(54) Title of the invention : MONITORING AND DIAGNOSTIC SYSTEM FOR A FLUID ENERGY MACHINE SYSTEM AND FLUID ENERGY MACHINE SYSTEM

(51) International classification :G05B19/418,G05B23/02
(31) Priority Document No :10 2010 026 678.7
(32) Priority Date :09/07/2010
(33) Name of priority country :Germany
(86) International Application No :PCT/EP2011/059934
Filing Date :15/06/2011
(87) International Publication No :WO 2012/004099
(61) Patent of Addition to Application Number :NA
Filing Date :NA
(62) Divisional to Application Number :NA
Filing Date :NA

(71)**Name of Applicant :**
1)SIEMENS AKTIENGESELLSCHAFT
Address of Applicant :Wittelsbacherplatz 2 80333 M¼nchen Germany
(72)**Name of Inventor :**
1)KL–PPNER Gerd

(57) Abstract :
The invention relates to a monitoring and diagnostic system (1) for a fluid energy machine system (3D), wherein the fluid energy machine system (30) comprises a plurality of different sub-systems (16, 17, 18, 19, 20, 21, 22, 25, 26) and system components (13, 14, 15, 23, 24). The invention furthermore relates to a fluid energy machine system (30) having a monitoring and diagnostic system (1) and to a method for monitoring and diagnosing a fluid energy machine system (30).

No. of Pages : 34 No. of Claims : 12

(12) PATENT APPLICATION PUBLICATION
(21) Application No.10793/DELNP/2012 A
(19) INDIA
(22) Date of filing of Application :11/12/2012
(43) Publication Date : 05/09/2014

(54) Title of the invention : ELEVATOR REGENERATIVE DRIVE CONTROL REFERENCED TO DC BUS

(51) International classification :B66B1/34,B66B1/06
(31) Priority Document No :NA
(32) Priority Date :NA
(33) Name of priority country :NA
(86) International Application No :PCT/US2010/043814
Filing Date :30/07/2010
(87) International Publication No :WO 2012/015417
(61) Patent of Addition to Application Number :NA
Filing Date :NA
(62) Divisional to Application Number :NA
Filing Date :NA

(71)**Name of Applicant :**
1)OTIS ELEVATOR COMPANY
Address of Applicant :Ten Farm Springs Road Farmington Connecticut 06032 2568 U.S.A.
(72)**Name of Inventor :**
1)MARVIN Daryl J.

(57) Abstract :
An exemplary elevator drive includes a DC bus. At least some power components in a power section are electrically referenced to the DC bus. At least some control components in a control section including a drive controller and associated inputs are electrically referenced to the DC bus. This eliminates any requirement for isolating the components referenced to the DC bus from each other.

No. of Pages : 11 No. of Claims : 10

(12) PATENT APPLICATION PUBLICATION
(19) INDIA
(22) Date of filing of Application :28/12/2012
(21) Application No.11350/DELNP/2012 A
(43) Publication Date : 05/09/2014

(54) Title of the invention : A METHOD AND DEVICE(S) FOR DIAGNOSIS AND/OR TREATMENT OF SLEEP APNEA AND RELATED DISORDERS

(51) International classification :A61F5/56,A61B5/08,A61M16/00
(31) Priority Document No :61/352931
(32) Priority Date :09/06/2010
(33) Name of priority country :U.S.A.
(86) International Application No :PCT/CA2011/000669
Filing Date :08/06/2011
(87) International Publication No :WO 2011/153622
(61) Patent of Addition to Application Number :NA
Filing Date :NA
(62) Divisional to Application Number :NA
Filing Date :NA

(71)**Name of Applicant :**
1)YRT Limited
Address of Applicant :506 141 Wellington Crescent Winnipeg Manitoba R3M 3X3 Canada
(72)**Name of Inventor :**
1)YOUNES Magdy

(57) Abstract :
Method and device for diagnosing and/or treating sleep apnea and related sleep disorders such as snoring and respiratory effort related arousals includes an inflatable implement which is applied to the external surface of the chest and/or abdomen (Vest). Pressure is caused to rise to a predetermined positive value. The rate of airflow into and/or out of said Vest is monitored whereby the Vest Flow is displayed or processed to obtain information about the breathing characteristics of the patient.

No. of Pages : 48 No. of Claims : 22

(12) PATENT APPLICATION PUBLICATION
(21) Application No.11351/DELNP/2012 A
(19) INDIA
(22) Date of filing of Application :28/12/2012
(43) Publication Date : 05/09/2014

(54) Title of the invention : COMPOSITE ANISOTROPIC TISSUE REINFORCING IMPLANTS HAVING ALIGNMENT MARKERS AND METHODS OF MANUFACTURING SAME

(51) International classification :A61F2/00
(31) Priority Document No :12/815275
(32) Priority Date :14/06/2010
(33) Name of priority country :U.S.A.
(86) International Application No :PCT/US2011/040355
Filing Date :14/06/2011
(87) International Publication No :WO 2011/159700
(61) Patent of Addition to Application Number :NA
Filing Date :NA
(62) Divisional to Application Number :NA
Filing Date :NA

(71)**Name of Applicant :**
1)ETHICON INC.
Address of Applicant :U.S. Route #22 Somerville NJ 08876 0151 U.S.A.
(72)**Name of Inventor :**
1)PFEIFFER Ruth
2)PRIEWE Jorg
3)SCHULDT HEMPE Barbara
4)WALTHER Christoph

(57) Abstract :
A composite implant includes an anisotropic surgical mesh having more stretchability along a first axis and less stretchability along a second axis that traverses the first axis and an alignment marker overlying a first major surface of the anisotropic mesh and extending along the first axis. The implant includes a first absorbable anti adhesion film overlying the alignment marker and the first major surface of the anisotropic mesh and a second absorbable anti adhesion film overlying the second major surface of the biocompatible mesh. The alignment marker is disposed between the first and second absorbable films and the first and second absorbable films are laminated to the anisotropic mesh.

No. of Pages : 31 No. of Claims : 23

(12) PATENT APPLICATION PUBLICATION
(21) Application No.11352/DELNP/2012 A
(19) INDIA
(22) Date of filing of Application :28/12/2012
(43) Publication Date : 05/09/2014

(54) Title of the invention : SYSTEM FOR VIBRATION CONFINEMENT

(51) International classification :H04R7/20,H04R9/02
(31) Priority Document No :12/794508
(32) Priority Date :04/06/2010
(33) Name of priority country :U.S.A.
(86) International Application No :PCT/US2011/039161
Filing Date :03/06/2011
(87) International Publication No :WO 2011/153490
(61) Patent of Addition to Application Number :NA
Filing Date :NA
(62) Divisional to Application Number :NA
Filing Date :NA

(71)**Name of Applicant :**
1)BEATS ELECTRONICS LLC
Address of Applicant :1601 Cloverfield Blvd Suite 5000N Santa Monica CA 90404 U.S.A.
(72)**Name of Inventor :**
1)WILLIAMSON Clayton

(57) Abstract :
Systems and apparatuses are provided for vibration confinement and stress management in a loudspeaker. In one embodiment the loudspeaker comprises a diaphragm that extends from an inner diaphragm region (e.g. dome or cone shaped) to an outer diaphragm region wherein the outer diaphragm region bends at a defined angle (e.g. between about 45 degrees and about 135 degrees) relative to the inner diaphragm region. The loudspeaker also comprises a suspension member extending from an inner suspension region to an outer suspension region the inner suspension region overlapping and attaching with the outer diaphragm region. The bend in the diaphragm isolates the inner diaphragm region from spurious vibrations in the suspension member.

No. of Pages : 24 No. of Claims : 20

(12) PATENT APPLICATION PUBLICATION
(19) INDIA
(22) Date of filing of Application :11/12/2012
(21) Application No.10789/DELNP/2012 A
(43) Publication Date : 05/09/2014

(54) Title of the invention : BRAKE LEVER FOR A BRAKE FOR A VEHICLE

(51) International classification :F16D65/60,C22C37/04
(31) Priority Document No :20 2010 011 587.6
(32) Priority Date :20/08/2010
(33) Name of priority country :Germany
(86) International Application No :PCT/EP2010/005280
Filing Date :27/08/2010
(87) International Publication No :WO 2012/022366
(61) Patent of Addition to Application Number :NA
Filing Date :NA
(62) Divisional to Application Number :NA
Filing Date :NA

(71)**Name of Applicant :**
1)HALDEX BRAKE PRODUCTS AB
Address of Applicant :Box 501 S 26124 Landskrona Sweden
(72)**Name of Inventor :**
1)–NNESTAM Kjell

(57) Abstract :
This invention refers to a brake lever (1) for a brake of a vehicle for transmitting a brake force from an actuator into a brake actuation mechanism for a frictional engagement of brake pads wherein the brake lever (1) comprises a housing made of cast iron which cast iron is solid solution strengthened ferritic spheroidal graphite cast iron.

No. of Pages : 13 No. of Claims : 9

(12) PATENT APPLICATION PUBLICATION
(19) INDIA
(22) Date of filing of Application :28/12/2012
(21) Application No.11340/DELNP/2012 A
(43) Publication Date : 05/09/2014

(54) Title of the invention : NUCLEIC ACID COMPRISING OR CODING FOR A HISTONE STEM LOOP AND A POLY(A) SEQUENCE OR A POLYADENYLATION SIGNAL FOR INCREASING THE EXPRESSION OF AN ENCODED PROTEIN

(51) International classification :C12N15/67
(31) Priority Document No :PCT/EP2010/004998
(32) Priority Date :13/08/2010
(33) Name of priority country :EPO
(86) International Application No :PCT/EP2011/004077
Filing Date :12/08/2011
(87) International Publication No :WO 2012/019780
(61) Patent of Addition to Application Number :NA
Filing Date :NA
(62) Divisional to Application Number :NA
Filing Date :NA

(71)**Name of Applicant :**
1)CUREVAC GMBH
Address of Applicant :Paul Ehrlich Str. 15 72076 T¼bingen Germany
(72)**Name of Inventor :**
1)THESS Andreas
2)SCHLAKE Thomas
3)PROBST Jochen

(57) Abstract :
The present application describes a coding nucleic acid sequence particularly a messenger RNA (mRNA) comprising or coding for a histone stem loop and a poly(A) sequence or a polyadenylation signal and the use thereof for increasing the expression of an encoded protein. It also discloses its use for the preparation of a pharmaceutical composition especially a vaccine e.g. for the use in the treatment of tumours and cancer diseases cardiovascular diseases infectious diseases autoimmune diseases or genetic diseases or in gene therapy. The present invention further describes an in vitro transcription method in vitro methods for increasing the expression of a protein using the nucleic acid comprising or coding for a histone stem loop and a poly(A) sequence or a polyadenylation signal and an ex vivo and in vivo method.

No. of Pages : 151 No. of Claims : 17

(12) PATENT APPLICATION PUBLICATION
(19) INDIA
(22) Date of filing of Application :28/12/2012

(21) Application No.11342/DELNP/2012 A
(43) Publication Date : 05/09/2014

(54) Title of the invention : FINE LAYERED PAPER HAVING A SOFT TOUCH

(51) International classification	:D21H17/57,D21H19/44,D21H19/62
(31) Priority Document No	:1054343
(32) Priority Date	:03/06/2010
(33) Name of priority country	:France
(86) International Application No	:PCT/FR2011/051226
Filing Date	:27/05/2011
(87) International Publication No	:WO 2011/151581
(61) Patent of Addition to Application Number	:NA
Filing Date	:NA
(62) Divisional to Application Number	:NA
Filing Date	:NA

(71)**Name of Applicant :**
1)ARJO WIGGINS FINE PAPERS LIMITED
Address of Applicant :Eversheds House 70 Great Bridgewater Street Manchester M1 5ES U.K.
(72)**Name of Inventor :**
1)BAUMLIN Jean Marie

(57) Abstract :
The invention relates to fine writing paper in particular for offset wrapping or printing said paper including a fibrous cushion having a body greater than or equal to 1.10 cm/g and at least one layer the dry deposit on one or each surface of the fibrous cushion of which is between 3 and 10 g/m and which includes at least one inorganic pigment at least one latex forming a binder and at least one aqueous polyurethane dispersion of 0.5% to 8% by dry weight in relation to the total dry weight of the pigment(s) of said layer so that the layered paper has a touch similar to that of the fibrous cushion.

No. of Pages : 19 No. of Claims : 18

(12) PATENT APPLICATION PUBLICATION
(19) INDIA
(22) Date of filing of Application :28/12/2012
(21) Application No.11343/DELNP/2012 A
(43) Publication Date : 05/09/2014

(54) Title of the invention : TYRE WITH IMPROVED BEADS

(51) International classification :B60C15/06
(31) Priority Document No :1054722
(32) Priority Date :15/06/2010
(33) Name of priority country :France
(86) International Application No :PCT/EP2011/059730
Filing Date :10/06/2011
(87) International Publication No :WO 2011/157661
(61) Patent of Addition to Application Number :NA
Filing Date :NA
(62) Divisional to Application Number :NA
Filing Date :NA

(71)**Name of Applicant :**
1)COMPAGNIE GENERALE DES ETABLISSEMENTS MICHELIN
Address of Applicant :12 cours Sablon F 63000 Clermont Ferrand France
2)MICHELIN RECHERCHE ET TECHNIQUE S.A.
(72)**Name of Inventor :**
1)BRUNEAU Fran§ois Xavier
2)BOURGEOIS Frdric

(57) Abstract :
A tyre comprising two beads each bead comprising an annular reinforcing structure a carcass reinforcement anchored in the two beads by a turn up around the annular reinforcing structure so as to form a main portion and a wrapped around portion. Each bead comprises a bead filler situated at least partially between the main portion and the wrapped around portion of the carcass reinforcement. Each bead further comprises an outer strip situated axially on the outside of the wrapped around portion of the carcass reinforcement. The bead filler has a thickness E(r) this thickness corresponding to the length of the intersection of the direction perpendicular to the main portion of the carcass reinforcement with the bead filler r denoting the distance separating the point of intersection of the direction perpendicular to the main portion of the carcass reinforcement with the carcass reinforcement from the radially innermost point of the annular reinforcing structure. The assembly formed by the bead filler and the outer strip has a thickness ET(r). For all the points of intersection of which the radial distance from the radially innermost point of the annular reinforcing structure is greater than or equal to 10% and less than or equal to 35% of the radial height H of the tyre the ratio E(r)/ET(r) is greater than or equal to 0.3 and less than or equal to 0.5.

No. of Pages : 21 No. of Claims : 8

(12) PATENT APPLICATION PUBLICATION
(19) INDIA
(22) Date of filing of Application :28/12/2012
(21) Application No.11354/DELNP/2012 A
(43) Publication Date : 05/09/2014

(54) Title of the invention : WINDSHIELD WIPER BLADE HAVING AN INTEGRATED SPRAYING DEVICE

(51) International classification :B60S1/52
(31) Priority Document No :10/02496
(32) Priority Date :21/06/2010
(33) Name of priority country :France
(86) International Application No :PCT/EP2011/059451
Filing Date :08/06/2011
(87) International Publication No :WO 2011/160952
(61) Patent of Addition to Application Number :NA
Filing Date :NA
(62) Divisional to Application Number :NA
Filing Date :NA

(71)**Name of Applicant :**
1)VALEO SYSTEMES DESSUYAGE
Address of Applicant :8 rue Louis Lormand F 78321 Le Mesnil Saint Denis France
(72)**Name of Inventor :**
1)MARQUET Chantal
2)PETITET Gilles

(57) Abstract :
The invention relates to a wiper blade (1) for a motor vehicle windshield (6) comprising a supporting mount (2) having a main longitudinal orientation having lower means having a wiper part (4) said supporting mount (2) being intended to be moved along a predetermined path between two end positions over a wiping cycle of the windshield (6) and a device (7 8) for spraying cleaning liquid comprising at least a first set of spray orifices oriented in said main longitudinal orientation over at least a part of a first side of the blade so as to spray washing liquid in front of the blade with respect to the wiping movement. According to the invention the spray orifices are distributed over said first side at a non constant spacing the distance between two successive orifices being selected such that the portion of the windshield surface that is effectively sprayed by a spray orifice during a wiping cycle is approximately equal to the same target value for all of the spray orifices of the first set.

No. of Pages : 19 No. of Claims : 7

(12) PATENT APPLICATION PUBLICATION
(19) INDIA
(22) Date of filing of Application :28/12/2012
(21) Application No.11355/DELNP/2012 A
(43) Publication Date : 05/09/2014

(54) Title of the invention : ORAL FORMULATION OF KINASE INHIBITORS

(51) International classification :A61K9/00
(31) Priority Document No :61/359694
(32) Priority Date :29/06/2010
(33) Name of priority country :U.S.A.
(86) International Application No :PCT/US2011/042162
Filing Date :28/06/2011
(87) International Publication No :WO 2012/006081
(61) Patent of Addition to Application Number :NA
Filing Date :NA
(62) Divisional to Application Number :NA
Filing Date :NA

(71)**Name of Applicant :**
1)PONIARD PHARMACEUTICALS INC.
Address of Applicant :300 Elliot Avenue West Suite 500 Seattle Washington 98119 4114 U.S.A.
(72)**Name of Inventor :**
1)CHEN Andrew Xian
2)TSAI Yali J.

(57) Abstract :
The invention is directed to formulations of bioactive compounds of limited water solubility inhibitors of focal adhesion kinase (FAK) of the 2 4 diaminopyridine class adapted for oral administration to patients. The formulations are self emulsifying in the gastrointestinal tract of the patients providing enhanced absorption and bioavailability of the bioactive compounds as dispersions or emulsions in an oil base. For example esters of PEG ylated glycerol can be used as the oil in conjunction with surfactants such as lecithin and TEPG succinate and solubilizers such as PEG 400 to provide useful oral formulations for administration to patients having a malcondition wherein inhibition of FAK is medically indicated such as cancer or arthritis.

No. of Pages : 21 No. of Claims : 26

(12) PATENT APPLICATION PUBLICATION
(19) INDIA
(22) Date of filing of Application :28/12/2012
(21) Application No.11356/DELNP/2012 A
(43) Publication Date : 05/09/2014

(54) Title of the invention : EXHAUST GAS PURIFICATION DEVICE FOR INTERNAL COMBUSTION ENGINE

(51) International classification :F02D41/04,F01N3/02,F02D41/14
(31) Priority Document No :2010216085
(32) Priority Date :27/09/2010
(33) Name of priority country :Japan
(86) International Application No :PCT/JP2011/068863
Filing Date :22/08/2011
(87) International Publication No :WO 2012/043093
(61) Patent of Addition to Application Number :NA
Filing Date :NA
(62) Divisional to Application Number :NA
Filing Date :NA

(71)**Name of Applicant :**
1)MITSUBISHI HEAVY INDUSTRIES LTD.
Address of Applicant :16 5 Konan 2 chome Minato ku Tokyo 1088215 Japan
(72)**Name of Inventor :**
1)IDE Kazunari
2)IKAWA Yoshikatsu

(57) Abstract :
An exhaust gas purification device for an internal combustion engine is characterized by comprising a feedforward control means (47) a feedback control means (49) for indicating a correction operation amount for the target temperature of a DPF (7) and an operation amount addition means (51) for adding a basic operation amount from the feedforward means (47) and the correction operation amount from the feedback control means (49) to calculate an operation amount and being provided with either an integrator reset means (55) for resetting the integral value of an integrator that constitutes the feedback control means (49) when the exhaust gas flow rate decreases rapidly and/or a basic operation amount calculation means for calculating the basic operation amount of the feedforward control means according to a signal based on the exhaust gas flow rate.

No. of Pages : 42 No. of Claims : 8

(12) PATENT APPLICATION PUBLICATION
(19) INDIA
(22) Date of filing of Application :28/12/2012
(21) Application No.11357/DELNP/2012 A
(43) Publication Date : 05/09/2014

(54) Title of the invention : EXHAUST GAS PURIFICATION DEVICE FOR DIESEL ENGINE

(51) International classification :F02D41/40,F01N3/02,F02D41/38
(31) Priority Document No :2010241469
(32) Priority Date :27/10/2010
(33) Name of priority country :Japan
(86) International Application No :PCT/JP2011/068861
Filing Date :22/08/2011
(87) International Publication No :WO 2012/056798
(61) Patent of Addition to Application Number :NA
Filing Date :NA
(62) Divisional to Application Number :NA
Filing Date :NA

(71)**Name of Applicant :**
1)MITSUBISHI HEAVY INDUSTRIES LTD.
Address of Applicant :16 5 Konan 2 chome Minato ku Tokyo 1088215 Japan
(72)**Name of Inventor :**
1)TAKAYANAGI Ko
2)OKUDA Keisuke

(57) Abstract :
An exhaust gas purification device for a diesel engine comprising in the exhaust gas path an oxidation catalyst (DOC)(7) and a diesel particulate filter (DPF)(9). The exhaust gas purification device is characterized in that a late post injection control means (62) feedback controls the amount of late post injection so that the amount of soot regenerated by the DPF (9) is a target amount of soot to be regenerated the late post injection control means (62) being a means which in the regeneration control of the DPF injects fuel into the combustion chamber at the timing not contributing to combustion.

No. of Pages : 46 No. of Claims : 8

(12) PATENT APPLICATION PUBLICATION
(19) INDIA
(22) Date of filing of Application :27/11/2012
(21) Application No.10299/DELNP/2012 A
(43) Publication Date : 05/09/2014

(54) Title of the invention : CARBOCATALYSTS FOR CHEMICAL TRANSFORMATIONS

(51) International classification :C07B41/00,B01J21/18,C07C45/42
(31) Priority Document No :61/349378
(32) Priority Date :28/05/2010
(33) Name of priority country :U.S.A.
(86) International Application No :PCT/US2011/038334
Filing Date :27/05/2011
(87) International Publication No :WO 2011/150329
(61) Patent of Addition to Application Number :NA
Filing Date :NA
(62) Divisional to Application Number :NA
Filing Date :NA

(71)**Name of Applicant :**
1)GRAPHEA INC.
Address of Applicant :1624 Headway Circle Austin TX 78754 U.S.A.
(72)**Name of Inventor :**
1)BIELAWSKI Christopher W.
2)DREYER Daniel R.
3)JIA Hong Peng

(57) Abstract :
The disclosure relates to catalytically active carbocatalysts e.g. a graphene oxide or graphite oxide catalyst suitable for use in a variety of chemical transformations. In one embodiment it relates to a method of catalyzing a chemical reaction of an organic molecule by reacting the organic molecule in the presence of a sufficient amount of graphene oxide or graphite oxide for a time and at a temperature sufficient to allow catalysis of a chemical reaction. According to other embodiments the reaction may be an oxidation reaction a hydration reaction a dehydrogenation reaction a condensation reaction or a polymerization reaction. Some reactions may include auto tandem reactions. The disclosure further provides reaction mixtures containing an organic molecule and graphene oxide or graphite oxide in an amount sufficient to catalyze a reaction of the organic molecule.

No. of Pages : 77 No. of Claims : 89

(12) PATENT APPLICATION PUBLICATION
(21) Application No.103/DELNP/2013 A
(19) INDIA
(22) Date of filing of Application :04/01/2013
(43) Publication Date : 05/09/2014

(54) Title of the invention : EXHAUST GAS RESIDUAL HEAT RECOVERY DEVICE

(51) International classification :F22D1/02,F23J15/06
(31) Priority Document No :2010144718
(32) Priority Date :25/06/2010
(33) Name of priority country :Japan
(86) International Application No :PCT/JP2011/063463
Filing Date :13/06/2011
(87) International Publication No :WO 2011/162117
(61) Patent of Addition to Application Number :NA
Filing Date :NA
(62) Divisional to Application Number :NA
Filing Date :NA

(71)**Name of Applicant :**
1)MITSUBISHI HEAVY INDUSTRIES LTD.
Address of Applicant :16 5 Konan 2 chome Minato ku Tokyo 1088215 Japan
(72)**Name of Inventor :**
1)ICHIHARA Tarou
2)TERAMOTO Kenshu
3)SUGITA Ryosuke

(57) Abstract :
In a duct leading to a chimnev (10) which discharges exhaust gas to the atmosphere, an exhaust gas residual heat recovery device (1) is provided with a dry economizer (2) which uses the sensible heat of exhaust gas to heat water-to-be-heated; and a condensation economizer (4) which is provided on the downstream side of the dry economizer (2), and uses the condensation latent heat of exhaust gas to heat the water-to-be-heated. The duct com- prises a first stage duct (6) wherein the dry economizer (2) is provided, and a latter stage duct (8) which is connected to the first stage duct (6), and changes exhaust gas flow into rising flow. The condensation economizer (4) is in stalled in the latter stage duct (8). The configuration of the duct is such that the exhaust gas reaches the condensation temperature in the vicinity of an upper section (5) of the condensation economizer (4).

No. of Pages : 40 No. of Claims : 6

(12) PATENT APPLICATION PUBLICATION
(19) INDIA
(22) Date of filing of Application :04/01/2013
(21) Application No.111/DELNP/2013 A
(43) Publication Date : 05/09/2014

(54) Title of the invention : THERAPEUTIC AGENTS 976

(51) International classification :C07D413/06,C07D413/14,A61K31/4245
(31) Priority Document No :61/361585
(32) Priority Date :06/07/2010
(33) Name of priority country :U.S.A.
(86) International Application No :PCT/GB2011/051256
Filing Date :04/07/2011
(87) International Publication No :WO 2012/004588
(61) Patent of Addition to Application Number :NA
Filing Date :NA
(62) Divisional to Application Number :NA
Filing Date :NA

(71)**Name of Applicant :**
1)ASTRAZENECA AB
Address of Applicant :S 151 85 Sdertlje Sweden
2)ASTRAZENECA UK LIMITED
(72)**Name of Inventor :**
1)B–KMAN WINIWARTER Susanne Doris Margit
2)FREDENWALL Marlene
3)HOGNER Anders Carl
4)JOHANSSON Lars Anders Mikael
5)JUDKINS Robert Andrew
6)LI Lanna
7)L–FBERG Bjrn Christian Ingvar
8)VON UNGE Per Oskar Sverker

(57) Abstract :
Disclosed herein are azetidinyl compounds of formula (I) as described herein pharmaceutical compositions comprising an azetidinyl compound and a method of using an azetidinyl compound in the treatment or prophylaxis of a melanin concentrating hormone related disease or condition.

No. of Pages : 149 No. of Claims : 15

(12) PATENT APPLICATION PUBLICATION
(19) INDIA
(22) Date of filing of Application :31/12/2012
(21) Application No.11377/DELNP/2012 A
(43) Publication Date : 05/09/2014

(54) Title of the invention : GELSOLIN ENRICHMENT OF BLOOD SAMPLES USING GOLD PARTICLES

(51) International classification :A61K35/12,A61K35/14,A61K38/17
(31) Priority Document No :10 2010 026 500.4
(32) Priority Date :07/07/2010
(33) Name of priority country :Germany
(86) International Application No :PCT/DE2011/001322
Filing Date :21/06/2011
(87) International Publication No :WO 2012/010128
(61) Patent of Addition to Application Number :NA
Filing Date :NA
(62) Divisional to Application Number :NA
Filing Date :NA

(71)**Name of Applicant :**
1)ARTHROGEN GMBH
Address of Applicant :Hermann Lns Weg 52 69118 Heidelberg Germany
(72)**Name of Inventor :**
1)SCHNEIDER Ulrich

(57) Abstract :
The invention relates to a method for producing at least one therapeutically active protein or protein mixture in a container. In said method the container is filled with a bodily fluid and gold particles and is incubated and the therapeutically active protein is formed in the bodily fluid.

No. of Pages : 34 No. of Claims : 31

(12) PATENT APPLICATION PUBLICATION
(19) INDIA
(22) Date of filing of Application :31/12/2012
(21) Application No.11381/DELNP/2012 A
(43) Publication Date : 05/09/2014

(54) Title of the invention : WEB MATERIAL AND METHOD FOR MAKING SAME

(51) International classification :D01F1/10,C11D17/04
(31) Priority Document No :61/361126
(32) Priority Date :02/07/2010
(33) Name of priority country :U.S.A.
(86) International Application No :PCT/US2011/042644
Filing Date :30/06/2011
(87) International Publication No :WO 2012/003351
(61) Patent of Addition to Application Number :NA
Filing Date :NA
(62) Divisional to Application Number :NA
Filing Date :NA

(71)**Name of Applicant :**
1)THE PROCTER & GAMBLE COMPANY
Address of Applicant :One Procter & Gamble Plaza Cincinnati Ohio 45202 U.S.A.
(72)**Name of Inventor :**
1)GORDON Gregory Charles
2)DENOME Frank William
3)HAMAD EBRAHIMPOUR Alyssandrea Hope
4)SIVIK Mark Robert
5)TROKHAN Paul Dennis
6)HODSON Stephen Joseph
7)CROLL Brian Patrick
8)MICHAEL John Gerhard
9)DREHER Andreas Josef

(57) Abstract :
A WEB MATERIAL CONTAINING ONE OR MORE ACTIVE AGENTS AND METHODS FOR MAKING SAME ARE PROVIDED. THE WEB MATERIAL HAS EITHER A BASIS WEIGHT OF LESS THAN 500 G/M2, OR A MD PEAK ELONGATION OF GREATER THAN 10%, OR A GM MODULUS OF LESS THAN 1500 G/CM2.

No. of Pages : 105 No. of Claims : 14

(12) PATENT APPLICATION PUBLICATION
(19) INDIA
(22) Date of filing of Application :31/12/2012
(21) Application No.11383/DELNP/2012 A
(43) Publication Date : 05/09/2014

(54) Title of the invention : A PROCESS FOR THE PRODUCTION OF CARNITINE FROM LACTONES

(51) International classification :C07D305/12,C07C227/08,C07C227/18
(31) Priority Document No :61/366390
(32) Priority Date :21/07/2010
(33) Name of priority country :U.S.A.
(86) International Application No :PCT/EP2011/003621
Filing Date :20/07/2011
(87) International Publication No :WO 2012/010297
(61) Patent of Addition to Application Number :NA
Filing Date :NA
(62) Divisional to Application Number :NA
Filing Date :NA

(71)**Name of Applicant :**
1)LONZA LTD
Address of Applicant :M¼nchensteinerstrasse 38 CH 4052 Basel Switzerland
(72)**Name of Inventor :**
1)HANSELMANN Paul
2)KLEGRAF Ellen

(57) Abstract :
The invention relates to a method for the production of L carnitine wherein a lactone which is a 4 (halomethyl)oxetane 2 one is converted into carnitine with trimethylamme (TMA) wherein the lactone is not subjected to a basic hydrolysis step before being contacted with the trimethylamme. The invention also relates to a carnitine having a unique impurity profile.

No. of Pages : 22 No. of Claims : 18

(12) PATENT APPLICATION PUBLICATION
(19) INDIA
(22) Date of filing of Application :28/12/2012
(21) Application No.11358/DELNP/2012 A
(43) Publication Date : 05/09/2014

(54) Title of the invention : TONGUE RETAINING ORAL APPLIANCE

(51) International classification :A61F5/56,A63B71/08,A61C19/00
(31) Priority Document No :61/352298
(32) Priority Date :07/06/2010
(33) Name of priority country :U.S.A.
(86) International Application No :PCT/US2011/039475
Filing Date :07/06/2011
(87) International Publication No :WO 2011/156396
(61) Patent of Addition to Application Number :NA
Filing Date :NA
(62) Divisional to Application Number :NA
Filing Date :NA

(71)**Name of Applicant :**
1)SLEEPY INC.
Address of Applicant :2570 W. El Camino Real Suite 310 Mountain View California 94040 U.S.A.
(72)**Name of Inventor :**
1)MAKOWER Joshua
2)JOSLIN James Blackburn
3)STRASSER Michael
4)SLONE Clinton N.
5)BRIGHT Earl A. II
6)SPINALI Marc
7)CARLSON Richard A.

(57) Abstract :
An oral appliance includes a frame for mounting to a user s teeth and a tongue contacting retaining member extending from the frame and configured in use to limit movement of the tongue toward the user s throat when the user is exercising or sleeping to maintain an open air passageway. The retaining member is positioned relative to the frame such that in use the retaining member contacts the tongue in a zone behind the second molars and in front of the pharyngeal reflex region of the tongue. The retaining member is further configured to lightly contact the tongue and to apply a restraining force to the tongue as the tongue begins to move toward the user s throat during exercise or as the user falls asleep.

No. of Pages : 82 No. of Claims : 23

(12) PATENT APPLICATION PUBLICATION
(19) INDIA
(22) Date of filing of Application :28/12/2012
(21) Application No.11359/DELNP/2012 A
(43) Publication Date : 05/09/2014

(54) Title of the invention : IDEOTYPICALLY MODULATED PHARMACOEFFECTORS FOR SELECTIVE CELL TREATMENT

(51) International classification :C12N15/00,C12N15/63
(31) Priority Document No :12/790931
(32) Priority Date :31/05/2010
(33) Name of priority country :U.S.A.
(86) International Application No :PCT/US2011/038393
Filing Date :27/05/2011
(87) International Publication No :WO 2011/153103
(61) Patent of Addition to Application Number :NA
Filing Date :NA
(62) Divisional to Application Number :NA
Filing Date :NA

(71)**Name of Applicant :**
1)ORME Jacob
Address of Applicant :215 N. Moore Road #6021 Coppell Texas 75019 U.S.A.
(72)**Name of Inventor :**
1)ORME Jacob

(57) Abstract :
IN A METHOD EMBODIMENT, A METHOD INCLUDES INTRODUCING A PLURALITY OF IDEOTYPICALLY MODULATED PHARMACOEFFECTORS (IMP) (1, 1A, 1B) INTO A POPULATION OF CELLS. EACH IMP (1, 1A, 1B) MAY INCLUDE A DETECTION DOMAIN (2, 2A, 2B) AND AN ACTIVATION DOMAIN (3, 3A, 3B). ONE OR MORE EPITOPES IS BOUND BY THE DETECTION DOMAIN (2, 2A, 2B). THE ACTIVATION DOMAIN (3, 3A, 3B) IS ACTIVATED IN RESPONSE TO THE BINDING. APPLICATIONS MAY INCLUDE BUT ARE NOT LIMITED TO VIRAL INFECTIONS, OTHER INTRACELLULAR INFECTIONS, CANCERS, VECTOR-BORNE DISEASES, AUTOIMMUNE DISEASES, CELLULAR DISEASES, CELLULAR ENHANCEMENT, AND RESEARCH.

No. of Pages : 51 No. of Claims : 29

(12) PATENT APPLICATION PUBLICATION
(19) INDIA
(22) Date of filing of Application :28/12/2012
(21) Application No.11363/DELNP/2012 A
(43) Publication Date : 05/09/2014

(54) Title of the invention : EXTRACTIVE DISTILLATION OF ASF5 AND PF5 USING HF

(51) International classification :C01B25/10,B01D3/40,C01B25/455
(31) Priority Document No :61/360160
(32) Priority Date :30/06/2010
(33) Name of priority country :U.S.A.
(86) International Application No :PCT/US2011/041964
Filing Date :27/06/2011
(87) International Publication No :WO 2012/012110
(61) Patent of Addition to Application Number :NA
Filing Date :NA
(62) Divisional to Application Number :NA
Filing Date :NA

(71)**Name of Applicant :**
1)HONEYWELL INTERNATIONAL INC.
Address of Applicant :Patent Services M/S AB/2B 101 Columbia Road P. O. Box 2245 Morristown New Jersey 07962 2245 U.S.A.
(72)**Name of Inventor :**
1)HULSE Ryan J.
2)POINTNER Bernie E.

(57) Abstract :
Arsenic can be an impurity in phosphorous pentafluoride production processes. It is desirable to remove arsenic from phosphorous pentafluoride prior to using of the phosphorous pentafluoride in the production of lithium hexafluorophosphate. The present technology provides methods of removing arsenic from phosphorous pentafluoride by extractive distillation.

No. of Pages : 11 No. of Claims : 10

(12) PATENT APPLICATION PUBLICATION
(19) INDIA
(22) Date of filing of Application :28/12/2012
(21) Application No.11364/DELNP/2012 A
(43) Publication Date : 05/09/2014

(54) Title of the invention : RIGID DISPOSABLE FLOW PATH

(51) International classification :F16L3/12
(31) Priority Document No :61/360644
(32) Priority Date :01/07/2010
(33) Name of priority country :U.S.A.
(86) International Application No :PCT/US2011/042188
Filing Date :28/06/2011
(87) International Publication No :WO 2012/003185
(61) Patent of Addition to Application Number :NA
Filing Date :NA
(62) Divisional to Application Number :NA
Filing Date :NA

(71)**Name of Applicant :**
1)EMD MILLIPORE CORPORATION
Address of Applicant :290 Concord Road Billerica MA 01821 U.S.A.
(72)**Name of Inventor :**
1)MORRISSEY Martin
2)SCHAUER Neil

(57) Abstract :
The present invention provides a disposable rigid flow path which by itself or in conjunction with a clam shell or manifold system provides additional pressure resistance for the disposable device. In a first embodiment the device is comprised of a first sheet of rigid plastic material and a second sheet of plastic material. Each sheet has a first major surface and a second major surface and a thickness between the first and second major surfaces. At least one and preferably both have flow channels formed in them. The flow channels are formed in the sheet such that they extend away from the first major surface of the sheet and beyond the normal plane of the second major surface of the sheet.. The first and second sheets are liquid tightly sealed to each other at their adjoining first major surfaces.

No. of Pages : 24 No. of Claims : 13

(12) PATENT APPLICATION PUBLICATION
(21) Application No.11365/DELNP/2012 A
(19) INDIA
(22) Date of filing of Application :28/12/2012
(43) Publication Date : 05/09/2014

(54) Title of the invention : APPARATUS AND METHOD FOR INSERTING PREFORMED ELECTRICAL BAR CONDUCTORS IN A TWISTING DEVICE

(51) International classification	:H02K15/06,H02K15/04	(71)**Name of Applicant :**
(31) Priority Document No	:NA	**1)TECNOMATIC S.p.A.**
(32) Priority Date	:NA	Address of Applicant :Zona lndustriaie Santa Scolastica Via Copemico 2 I 64013 CORROPOLI (Teramo Italy) Italy
(33) Name of priority country	:NA	(72)**Name of Inventor :**
(86) International Application No	:PCT/IT2010/000313	**1)GUERCIONI Sante**
Filing Date	:16/07/2010	
(87) International Publication No	:WO 2012/007973	
(61) Patent of Addition to Application Number	:NA	
Filing Date	:NA	
(62) Divisional to Application Number	:NA	
Filing Date	:NA	

(57) Abstract :
An apparatus (4) for inserting preformed electrical bar conductors (8) into an associable twisting device (12) comprising a supply device (28) of conductors (8) which are bent in a manner so as to have two substantially rectilinear arms (16) parallel to each other connected to each other by a curved portion (20) said electrical bar conductors (8) being arranged according to a supply direction (X X). The apparatus (4) also comprises a transfer device (32) which draws a conductor (8) from the supply device (28) and rotates it 90 degrees into an insertion position in which it is arranged according to an insertion direction (Y Y) perpendicular to said supply direction (X X) and parallel to pockets (24) of an associable twisting device (12) of the conductors (8). The apparatus (4) comprises a device (36) for inserting the conductor (8) into the twisting device (12) equipped with thrust means (40) which translate the conductor (8) along the insertion direction (Y Y) until it is at least partially inserted into said pockets (24).

No. of Pages : 33 No. of Claims : 19

(12) PATENT APPLICATION PUBLICATION
(19) INDIA
(22) Date of filing of Application :29/11/2012
(21) Application No.10390/DELNP/2012 A
(43) Publication Date : 05/09/2014

(54) Title of the invention : PROCESS FOR PRODUCING STEEL PIPE FOR AIR BAG

(51) International classification :C21D8/10,C21D9/08,C22C38/00
(31) Priority Document No :2010127713
(32) Priority Date :03/06/2010
(33) Name of priority country :Japan
(86) International Application No :PCT/JP2011/062583
Filing Date :01/06/2011
(87) International Publication No :WO 2011/152447
(61) Patent of Addition to Application Number :NA
Filing Date :NA
(62) Divisional to Application Number :NA
Filing Date :NA

(71)**Name of Applicant :**
1)NIPPON STEEL & SUMITOMO METAL CORPORATION
Address of Applicant :6 1 Marunouchi 2 chome Chiyoda ku Tokyo 1008071 Japan
(72)**Name of Inventor :**
1)KAWAMOTO Takuma
2)ARAI Yuji
3)TAKANO Takashi

(57) Abstract :
A process for producing a high- strength and high-toughness steel pipe for air bags i s disclosed with which it i s possiole t o simplify the step of cold drawing and reduce alloy cost. The process comprises: forming a seamless steel pipe from a steel which contains, i n terms o f mass%, 0.04-0.20% C , 0 . 10-0.50% Si, 0 . 10-1.00% Mn, u p t o 0.025% P , u p t o 0.005% S, up t o 0 . 10% Al, 0.01-0.50% Cr, 0.01-0.50% Cu, and 0.01 -0.50% Ni, with the remainder comprising F e and incidental impurities; sub jecting this seamless steel pipe t o cold drawing at least once so as t o result in a reduction o f area exceeding 40%, thereby making the steel pipe have a given size; heating the drawn steel pipe t o a temperature which i s the Ac3 point or higher at a rate o f 50 °C/s or higher; subsequently cooling the heated steel pipe so that the cooling rate in the temperature range of at least 850-500 °C i s 50 °C/s or higher, thereby quench-hardening the steel pipe; and then tempering the steel pipe at a temperature which i s the A c i o in t or lower.

No. of Pages : 24 No. of Claims : 9

(12) PATENT APPLICATION PUBLICATION
(19) INDIA
(22) Date of filing of Application :29/11/2012
(21) Application No.10391/DELNP/2012 A
(43) Publication Date : 05/09/2014

(54) Title of the invention : NEW COMPOSITION AND USE THEREOF

(51) International classification :C08L23/14,C09D5/24,H01B1/24
(31) Priority Document No :10165492.9
(32) Priority Date :10/06/2010
(33) Name of priority country :EPO
(86) International Application No :PCT/EP2011/058937
Filing Date :31/05/2011
(87) International Publication No :WO 2011/154288
(61) Patent of Addition to Application Number :NA
Filing Date :NA
(62) Divisional to Application Number :NA
Filing Date :NA

(71)**Name of Applicant :**
1)BOREALIS AG
Address of Applicant :Wagramer Strasse 17 19 A 1220 Vienna Austria
(72)**Name of Inventor :**
1)STEFFL Thomas
2)SVANBERG Christer

(57) Abstract :
The present invention relates to a cable comprising a novel semiconductive layer.

No. of Pages : 33 No. of Claims : 15

(12) PATENT APPLICATION PUBLICATION
(19) INDIA
(22) Date of filing of Application :29/11/2012
(21) Application No.10392/DELNP/2012 A
(43) Publication Date : 05/09/2014

(54) Title of the invention : ADSORBENT FOR FEED AND PRODUCTS PURIFICATION IN A REFORMING PROCESS

(51) International classification :C10G35/00,C10G25/00,B01J20/08
(31) Priority Document No :61/359915
(32) Priority Date :30/06/2010
(33) Name of priority country :U.S.A.
(86) International Application No :PCT/US2011/042273
Filing Date :29/06/2011
(87) International Publication No :WO 2012/012149
(61) Patent of Addition to Application Number :NA
Filing Date :NA
(62) Divisional to Application Number :NA
Filing Date :NA

(71)**Name of Applicant :**
1)UOP LLC
Address of Applicant :25 East Algonquin Road P. O. Box 5017 Des Plaines Illinois 60017 5017 U.S.A.
(72)**Name of Inventor :**
1)KANAZIREV Vladislav I.
2)GORAWARA Jayant K.
3)SULLIVAN Dana K.
4)ROSIN Richard R.

(57) Abstract :
The service life and deactivation rate of a reforming catalyst is improved through use of a new sulfur guard bed containing a chloride additive. This sulfur guard bed which contains supported CuO material having an increased resistance to reduction shows such improvement. Thus the danger of run away reduction followed by a massive release of water causing process upsets in a catalytic reforming process is practically eliminated. The fact that the guard bed material preserves the active metal phase copper in an active (oxide) form is an important advantage leading to very low sulfur content in the product stream. The sulfur capacity per unit weight of sorbent is also significantly increased making this sorbent a superior cost effective sulfur guard product.

No. of Pages : 14 No. of Claims : 9

(12) PATENT APPLICATION PUBLICATION
(19) INDIA
(22) Date of filing of Application :29/11/2012

(21) Application No.10393/DELNP/2012 A
(43) Publication Date : 05/09/2014

(54) Title of the invention : MALWARE SCANNING

(51) International classification :G06F21/00
(31) Priority Document No :12/800889
(32) Priority Date :25/05/2010
(33) Name of priority country :U.S.A.
(86) International Application No :PCT/EP2011/057489
Filing Date :10/05/2011
(87) International Publication No :WO 2011/147674
(61) Patent of Addition to Application Number :NA
Filing Date :NA
(62) Divisional to Application Number :NA
Filing Date :NA

(71)**Name of Applicant :**
1)F SECURE CORPORATION
Address of Applicant :Tammasaarenkatu 7 PL24 FIN 00181 Helsinki Finland
(72)**Name of Inventor :**
1)TURBIN Pavel

(57) Abstract :
According to a first aspect of the present invention there is provided a method of scanning a computer system for malware. The method comprises determining when an application being executed on the computer system is attempting to open a file adding data written to the open file by the application into a malware scanner queue and ensuring that the application has been notified that the file has been closed before scanning the queued file data to determine if it relates to potential malware.

No. of Pages : 21 No. of Claims : 20

(12) PATENT APPLICATION PUBLICATION
(21) Application No.12/DELNP/2013 A
(19) INDIA
(22) Date of filing of Application :01/01/2013
(43) Publication Date : 05/09/2014

(54) Title of the invention : MULTI CHAMBER HEAT TREATMENT DEVICE

(51) International classification :F27B9/02,C21D1/00,F27B9/10
(31) Priority Document No :2010151563
(32) Priority Date :02/07/2010
(33) Name of priority country :Japan
(86) International Application No :PCT/JP2011/065179
Filing Date :01/07/2011
(87) International Publication No :WO 2012/002532
(61) Patent of Addition to Application Number :NA
Filing Date :NA
(62) Divisional to Application Number :NA
Filing Date :NA

(71)**Name of Applicant :**
1)IHI Corporation
Address of Applicant :1 1 Toyosu 3 chome Koto ku Tokyo 1358710 Japan
2)IHI Machinery and Furnace Co. Ltd.
(72)**Name of Inventor :**
1)KATSUMATA Kazuhiko

(57) Abstract :
A multi-chamber heat treatment device (SI) includes a plurality of - treatment chambers having a heat treatment chamber, the device including: a cooling chamber (3) serving as the heat treatment chamber configured to cool a treatment target by latent heat of liquid particles; treatment chambers (1, 2) different from the cooling chamber (3); and drying devices (1 1, 19) configured to dry the cooling chamber (3).

No. of Pages : 33 No. of Claims : 10

(12) PATENT APPLICATION PUBLICATION
(19) INDIA
(22) Date of filing of Application :29/11/2012
(21) Application No.10357/DELNP/2012 A
(43) Publication Date : 05/09/2014

(54) Title of the invention : COMPOSITION FOR THE COLD STORAGE OF ORGANS

(51) International classification :A01N1/02
(31) Priority Document No :P201030782
(32) Priority Date :24/05/2010
(33) Name of priority country :Spain
(86) International Application No :PCT/ES2011/070375
Filing Date :24/05/2011
(87) International Publication No :WO 2011/148024
(61) Patent of Addition to Application Number :NA
Filing Date :NA
(62) Divisional to Application Number :NA
Filing Date :NA

(71)**Name of Applicant :**
1)DIGNA BIOTECHS.L.
Address of Applicant :Avenida Po XII 22 Oficina 2 E 31008 Pamplona Navarra Spain
2)PROYECTO DE BIOMEDICINA CIMA S.L.
(72)**Name of Inventor :**
1)CHANG Haisul C.Y.
2)FERN NDEZ GALLEGO Victor
3)I'IGUEZ MART NEZ Mara
4)LPEZ NOVOA Jose Miguel
5)PRIETO VALTUE'A Jesºs Mara
6)RUIZ ECHEVERR A Juan

(57) Abstract :
The invention relates to a composition for the cold storage of organs for transplant, comprising a solution for the cold storage of organs and cardiotrophin-l or a functionally equivalent variant thereof. The invention also relates to methods and kits for the preparation of said composition, to the uses of such compositions for the protection and/or cold storage of organs for transplant (particularly kidney, lung and heart), as well as to cold storage methods and the isolated organs stored under cold conditions using said methods.

No. of Pages : 79 No. of Claims : 58

(12) PATENT APPLICATION PUBLICATION
(19) INDIA
(22) Date of filing of Application :29/11/2012
(21) Application No.10358/DELNP/2012 A
(43) Publication Date : 05/09/2014

(54) Title of the invention : SAMPLING AND ANALYSIS METHOD TO ACHIEVE A DETAILED ANALYSIS OF A REACTOR EFFLUENT

(51) International classification :G01N33/00,G01N5/00,G01N1/22
(31) Priority Document No :10166091.8
(32) Priority Date :16/06/2010
(33) Name of priority country :EPO
(86) International Application No :PCT/EP2011/059906
Filing Date :15/06/2011
(87) International Publication No :WO 2011/157738
(61) Patent of Addition to Application Number :NA
Filing Date :NA
(62) Divisional to Application Number :NA
Filing Date :NA

(71)**Name of Applicant :**
1)TOTAL RESEARCH & TECHNOLOGY FELUY
Address of Applicant :Zone Industrielle C B 7181 Seneffe Belgium
(72)**Name of Inventor :**
1)BAEVEGHEMS Guy
2)DETEMMERMAN Eric
3)VIENNET Dominique
4)MARY Ga«tan
5)ROMERS Eric

(57) Abstract :
The present invention relates to a method suitable for establishing an analysis of a reactor effluent which is gaseous in process conditions and comprises a gas phase and a liquid phase after cooling comprising : providing a reactor producing a gaseous effluent at a temperature of at least about 100 °C and a pressure ranging from 0.05 MPa to 10 MPa which comprises at least one gaseous phase and one liquid phase after cooling providing a sampling vessel having connecting means capable to be filled with a sample of the above gaseous effluent and keep said sample putting said sampling vessel under vacuum connecting said sampling vessel to the outlet of the reactor containing the effluent gas to fill said sampling vessel with a sample of the effluent gas disconnecting the sampling vessel cooling it to get a gas phase and a liquid phase determining the composition of the gas phase sampling vessel pressure sampling vessel volume and sampling vessel temperature and calculating the mass of the gas phase therefore determining the liquid phase mass by weighing of total sample and subtraction of the gas mass determining the detailed composition of the liquid phase by any means determining the detailed composition the reactor effluent by combining these data.

No. of Pages : 22 No. of Claims : 4

(12) PATENT APPLICATION PUBLICATION
(19) INDIA
(22) Date of filing of Application :29/11/2012

(21) Application No.10364/DELNP/2012 A
(43) Publication Date : 05/09/2014

(54) Title of the invention : AN ELECTRO OPTICAL DETECTOR DEVICE

(51) International classification	:G02B23/12,G02B27/01,A42B3/04
(31) Priority Document No	:2010/04491
(32) Priority Date	:03/06/2010
(33) Name of priority country	:Turkey
(86) International Application No	:PCT/IB2011/052439
Filing Date	:03/06/2011
(87) International Publication No	:WO 2011/151803
(61) Patent of Addition to Application Number	:NA
Filing Date	:NA
(62) Divisional to Application Number	:NA
Filing Date	:NA

(71)**Name of Applicant :**
1)ASELSAN ELEKTRONIK SANAYI VE TICARET ANONIM SIRKETI
Address of Applicant :Mehmet Akif Ersoy Mahallesi 16. Cadde No:16 Yenimahalle Macunkoy Ankara Turkey
(72)**Name of Inventor :**
1)UNSOY Alper
2)BALCI Hande
3)AYDIN Mehmet
4)COLAKOGLU Ugur
5)BARUTCU Burak
6)SONMEZ SUNGU Remziye
7)AYBAR Guray
8)COBAN Ahmet
9)TURAN Arif Erg¼n
10)OZYUREK Serkan
11)KONALI Sertel
12)OZGUN Huseyin
13)KARAGOZ M. Fatih
14)AYYILDIZ Coskun

(57) Abstract :
The present invention relates to an electro optical detector system which provides vision in dark environments by detecting the thermal energy emitted by the objects and the infrared radiation via a detector; comprises a body (2) including the parts therein at least one cover (3) covering the pieces located inside the body at least one imaging group (4) located in front part of the body and enabling the environment to be displayed in inconvenient weather conditions for vision such as night fog mist snow blizzard etc. and at least one protection cover (5) protecting the front face of the device from being affected by outer impacts.

No. of Pages : 19 No. of Claims : 13

(12) PATENT APPLICATION PUBLICATION
(19) INDIA
(22) Date of filing of Application :04/01/2013
(21) Application No.124/DELNP/2013 A
(43) Publication Date : 05/09/2014

(54) Title of the invention : SYSTEMS AND METHODS FOR INTELLIGENT AND FLEXIBLE MANAGEMENT AND MONITORING OF COMPUTER SYSTEMS

(51) International classification	:G06F11/22,G06F11/30,G06F13/14
(31) Priority Document No	:61/352362
(32) Priority Date	:07/06/2010
(33) Name of priority country	:U.S.A.
(86) International Application No	:PCT/US2011/039491
Filing Date	:07/06/2011
(87) International Publication No	:WO 2011/156404
(61) Patent of Addition to Application Number	:NA
Filing Date	:NA
(62) Divisional to Application Number	:NA
Filing Date	:NA

(71)**Name of Applicant :**
1)SULLIVAN Jason A.
Address of Applicant :299 South Main Street Suite 1300 Salt Lake City Utah 84111 U.S.A.
2)ABDOUCH Charles
(72)**Name of Inventor :**
1)SULLIVAN Jason A.
2)ABDOUCH Charles

(57) Abstract :
Systems and methods for intelligent and flexible management and monitoring of computer systems are provided using platform management controllers (PMCs) located on circuit boards of a computer system. The PMCs provide for enhanced circuit board certification and security enhanced systems monitoring and reporting and enhanced systems control. The PMCs also allow for emulation of processor based devices and are low power low cost and very fast when compared to the devices replaced and functionality provided. A power supply tracking apparatus helps to ensure that a first power input to an operational circuit maintains a predefined relationship to a second power input to the operational circuit. Systems and methods for receiving computer systems diagnostics information and for customizably displaying such information from a diagnostics monitoring device are incorporated into a computer system. The monitored computer system information is transmitted to a diagnostics device such as by infrared or by a novel temporary wired connection.

No. of Pages : 89 No. of Claims : 64

(12) PATENT APPLICATION PUBLICATION
(19) INDIA
(22) Date of filing of Application :28/12/2012
(21) Application No.11346/DELNP/2012 A
(43) Publication Date : 05/09/2014

(54) Title of the invention : OPHTHALMIC DEVICES CONTAINING CHEMOKINE ANTAGONISTS

(51) International classification :A61K9/00,G02C7/04,A61K31/135
(31) Priority Document No :61/359963
(32) Priority Date :30/06/2010
(33) Name of priority country :U.S.A.
(86) International Application No :PCT/US2011/042404
Filing Date :29/06/2011
(87) International Publication No :WO 2012/012184
(61) Patent of Addition to Application Number :NA
Filing Date :NA
(62) Divisional to Application Number :NA
Filing Date :NA

(71)**Name of Applicant :**
1)JOHNSON & JOHNSON VISION CARE INC.
Address of Applicant :7500 Centurion Parkway Jacksonville FL 32256 U.S.A.
(72)**Name of Inventor :**
1)CHAOUK Hassan
2)DRAGANOVIC Dijana
3)KHANOLKAR Vandeeta

(57) Abstract :
Ionic ophthalmic devices methods of treating chemoattractant cytokine receptor 2 (CCR2) mediated inflammatory conditions and methods of making such devices are disclosed herein.

No. of Pages : 23 No. of Claims : 10

(12) PATENT APPLICATION PUBLICATION
(19) INDIA
(22) Date of filing of Application :28/12/2012
(21) Application No.11347/DELNP/2012 A
(43) Publication Date : 05/09/2014

(54) Title of the invention : HEADREST AND METHOD FOR MANUFACTURING A HEADREST

(51) International classification :B60N2/48,B60N2/70,B29C44/12
(31) Priority Document No :10 2010 023 246.7
(32) Priority Date :09/06/2010
(33) Name of priority country :Germany
(86) International Application No :PCT/EP2011/002554
Filing Date :23/05/2011
(87) International Publication No :WO 2011/154095
(61) Patent of Addition to Application Number :NA
Filing Date :NA
(62) Divisional to Application Number :NA
Filing Date :NA

(71)**Name of Applicant :**
1)JOHNSON CONTROLS GMBH
Address of Applicant :Industriestrae 20 30 51399 Burscheid Germany
(72)**Name of Inventor :**
1)MORILHAT Philippe
2)REINER Sophie
3)MARTINI Ana Paula

(57) Abstract :
A headrest and a method for manufacturing a headrest are proposed wherein the headrest is provided in particular as a motor vehicle headrest wherein the headrest has a cover and a foamed material wherein the foamed material fills the cover at least in certain areas wherein the headrest is manufactured in such a way that the foamed material is at least partially liquid at the time when the foamed material is introduced into the cover wherein the cover has at least one closure element wherein an opening in the cover which is present before the foamed material is introduced can be closed off by means of the closure element.

No. of Pages : 16 No. of Claims : 8

(12) PATENT APPLICATION PUBLICATION
(19) INDIA
(22) Date of filing of Application :28/12/2012
(21) Application No.11348/DELNP/2012 A
(43) Publication Date : 05/09/2014

(54) Title of the invention : HEADREST IN PARTICULAR FOR A MOTOR VEHICLE

(51) International classification :B60N2/48
(31) Priority Document No :10 2010 023 403.6
(32) Priority Date :11/06/2010
(33) Name of priority country :Germany
(86) International Application No :PCT/EP2011/002805
Filing Date :08/06/2011
(87) International Publication No :WO 2011/154130
(61) Patent of Addition to Application Number :NA
Filing Date :NA
(62) Divisional to Application Number :NA
Filing Date :NA

(71)**Name of Applicant :**
1)JOHNSON CONTROLS GMBH
Address of Applicant :Industriestrae 20 30 51399 Burscheid Germany
(72)**Name of Inventor :**
1)SCHMITZ Andreas
2)V–LKER Henrik

(57) Abstract :
A headrest for a vehicle seat in particular for a motor vehicle seat is proposed the headrest comprising a padded part facing the head of a seat occupant a basic part and a comfort adjustment device. When the headrest is in use the padded part can be adjusted by means of the comfort adjustment device relative to the basic part from a first position in which it is further away from the head of the seat occupant into a second position closer to the head of the seat occupant. The comfort adjustment device has two control elements which can be set in a locking position and in an unlocking position the movement of the control elements being synchronized.

No. of Pages : 17 No. of Claims : 6

(12) PATENT APPLICATION PUBLICATION
(19) INDIA
(22) Date of filing of Application :28/12/2012
(21) Application No.11349/DELNP/2012 A
(43) Publication Date : 05/09/2014

(54) Title of the invention : METAL PIPE FOR VEHICLE PIPING AND SURFACE TREATMENT METHOD FOR PIPE

(51) International classification :C23C2/06,C23C2/02,C23C2/14
(31) Priority Document No :2010131996
(32) Priority Date :09/06/2010
(33) Name of priority country :Japan
(86) International Application No :PCT/JP2011/062948
Filing Date :06/06/2011
(87) International Publication No :WO 2011/155450
(61) Patent of Addition to Application Number :NA
Filing Date :NA
(62) Divisional to Application Number :NA
Filing Date :NA

(71)**Name of Applicant :**
1)SANOH KOGYO KABUSHIKI KAISHA
Address of Applicant :1 23 23 Ebisu Shibuya ku Tokyo 1500013 Japan
(72)**Name of Inventor :**
1)KON Takanori
2)OZAWA Juichi
3)OMOTE Kazuyuki

(57) Abstract :
Disclosed is a metal pipe which is for vehicle piping and which exhibits high corrosion resistance without the corrosion resistance being strengthened by means of a coating or a resin coating layer due to a hot dip plating coating layer being formed by applying a hot dip plating to the pipe. The disclosed metal pipe for vehicle piping has a plating coating layer formed on the surface of a formed metal pipe said plating coating layer being formed by means of hot dip plating on the surface of the metal pipe and the plating coating layer being formed from a hot dip plating alloy comprising at least 3 weight% Al 1 15 weight% Mg and Zn and unavoidable impurities as the remainder.

No. of Pages : 22 No. of Claims : 9

(12) PATENT APPLICATION PUBLICATION
(19) INDIA
(22) Date of filing of Application :04/01/2013
(21) Application No.121/DELNP/2013 A
(43) Publication Date : 05/09/2014

(54) Title of the invention : PROCESS FOR SYNTHESIZING BRIDGED CYCLOPENTADIENYL INDENYL METALLOCENES

(51) International classification :C07F17/00
(31) Priority Document No :12/830591
(32) Priority Date :06/07/2010
(33) Name of priority country :U.S.A.
(86) International Application No :PCT/US2011/042928
Filing Date :05/07/2011
(87) International Publication No :WO 2012/006268
(61) Patent of Addition to Application Number :NA
Filing Date :NA
(62) Divisional to Application Number :NA
Filing Date :NA

(71)**Name of Applicant :**
1)CHEVRON PHILLIPS CHEMICAL COMPANY LP
Address of Applicant :10001 Six Pines Drive The Woodlands Texas 77380 U.S.A.
(72)**Name of Inventor :**
1)YANG Qing
2)HLAVINKA Mark L.

(57) Abstract :
The present invention provides methods of making bridged cyclopentadienyl indenyl metallocene compounds. Generally these methods can be conducted without the use of a fine purification process such as distillation chromatography and crystallization.

No. of Pages : 62 No. of Claims : 20

(12) PATENT APPLICATION PUBLICATION
(21) Application No.126/DELNP/2013 A
(19) INDIA
(22) Date of filing of Application :04/01/2013
(43) Publication Date : 05/09/2014

(54) Title of the invention : MINITURIZATION TECHNIQUES SYSTEMS AND APPARATUS RELATING TO POWER SUPPLIES MEMORY INTERCONNECTIONS AND LEDS

(51) International classification :G06F1/26
(31) Priority Document No :61/352359
(32) Priority Date :07/06/2010
(33) Name of priority country :U.S.A.
(86) International Application No :PCT/US2011/039292
Filing Date :06/06/2011
(87) International Publication No :WO 2011/156277
(61) Patent of Addition to Application Number :NA
Filing Date :NA
(62) Divisional to Application Number :NA
Filing Date :NA

(71)**Name of Applicant :**
1)SULLIVAN Jason A.
Address of Applicant :299 South Main Street Suite 1300 Salt Lake City Utah 84111 U.S.A.
2)ABDOUCH Charles
(72)**Name of Inventor :**
1)SULLIVAN Jason A.
2)ABDOUCH Charles

(57) Abstract :
Miniaturization techniques systems and apparatus relating to power supplies memory interconnections and LEDS are described herein. Specifically some aspects of the invention relate to techniques for miniaturization of power supplies. Other aspects relate to systems and methods for optimizing memory performance in a computer device or system. Still further some aspects relate to systems and methods for miniaturizing and optimizing memory layout on a circuit board. Other aspects relate to systems and methods for attaching an integrated circuit which comprises an array of pins to a circuit board through the use of an adaptor that comprises a BGA and which is configured to electrically and physically attach to the circuit board. Furthermore some aspects relate to systems and methods for achieving activation of at least one multi color LED such as a bi color or tri color LED using multiple electrical ground outputs or signals intended to activate only a single unicolor LED.

No. of Pages : 64 No. of Claims : 20

(12) PATENT APPLICATION PUBLICATION
(21) Application No.11/DELNP/2013 A
(19) INDIA
(22) Date of filing of Application :01/01/2013
(43) Publication Date : 05/09/2014

(54) Title of the invention : COMBUSTION CONTROL VIA HOMOGENEOUS COMBUSTION RADICAL IGNITION (HCRI) OR PARTIAL HCRI IN CYCLIC IC ENGINES

(51) International classification :F02M25/07
(31) Priority Document No :61/350939
(32) Priority Date :03/06/2010
(33) Name of priority country :U.S.A.
(86) International Application No :PCT/US2011/039090
Filing Date :03/06/2011
(87) International Publication No :WO 2011/153448
(61) Patent of Addition to Application Number :NA
Filing Date :NA
(62) Divisional to Application Number :NA
Filing Date :NA

(71)**Name of Applicant :**
1)BLANK David Alan.
Address of Applicant :1294 Masters Drive Arnold MD 21012 U.S.A.
(72)**Name of Inventor :**
1)BLANK David Alan.

(57) Abstract :
A process (800) is provided for improving combustion control and fuel efficiency in rotary and reciprocating IC engines by enabling leaner combustion at higher compression ratios using less heat for ignition. Embodiments employ secondary chambers (32) of minimal total volume within a cylinder periphery (36). These chambers (32) communicate with a main chamber (34) via conduits (42) and enable a radical ignition (RI) species generation and supply process that starts in earlier cycles to be augmented and used in later cycles. Measures regulate the RI species generated and provided to the main chamber (34). These species alter dominant chain initiation reactions of the combustion ignition mechanism. Also employed when preferable are fluids of higher heat of vaporization and volatility but lower ignitability than the fuel. This process improves combustion in radical ignition engines and radical augmented spark and compression ignition engines.

No. of Pages : 193 No. of Claims : 62

(12) PATENT APPLICATION PUBLICATION
(19) INDIA
(22) Date of filing of Application :04/01/2013
(21) Application No.110/DELNP/2013 A
(43) Publication Date : 05/09/2014

(54) Title of the invention : SUPERABRASIVE CUTTING ELEMENTS WITH CUTTING EDGE GEOMETRY HAVING ENHANCED DURABILITY AND CUTTING EFFIECIENCY AND DRILL BITS SO EQUIPPED

(51) International classification :B23B51/08,B23B51/02,B23B51/00
(31) Priority Document No :61/353507
(32) Priority Date :10/06/2010
(33) Name of priority country :U.S.A.
(86) International Application No :PCT/US2011/038204
Filing Date :26/05/2011
(87) International Publication No :WO 2011/156150
(61) Patent of Addition to Application Number :NA
Filing Date :NA
(62) Divisional to Application Number :NA
Filing Date :NA

(71)**Name of Applicant :**
1)BAKER HUGHES INCORPORATED
Address of Applicant :P.O. Box 4740 Houston TX 77210 4740 U.S.A.
(72)**Name of Inventor :**
1)DIGIOVANNI Anthony A.

(57) Abstract :
A superabrasive cutting element including a diamond or other superabrasive material table having a peripheral cutting edge defined by at least one chamfer between a cutting face and a side surface of the table an arcuate surface extending between the cutting face and an innermost chamfer of the at least one chamfer and a sharp angular transition between an outermost chamfer of the at least one chamfer and the side surface. Methods of producing such superabrasive cutting elements and drill bits equipped with such superabrasive cutting elements are also disclosed.

No. of Pages : 20 No. of Claims : 15

(12) PATENT APPLICATION PUBLICATION
(21) Application No.113/DELNP/2013 A
(19) INDIA
(22) Date of filing of Application :04/01/2013
(43) Publication Date : 05/09/2014

(54) Title of the invention : ORALLY DISINTEGRATING TABLET

(51) International classification :A61K9/26,A61K47/12
(31) Priority Document No :2010156873
(32) Priority Date :09/07/2010
(33) Name of priority country :Japan
(86) International Application No :PCT/JP2011/065714
Filing Date :08/07/2011
(87) International Publication No :WO 2012/005359
(61) Patent of Addition to Application Number :NA
Filing Date :NA
(62) Divisional to Application Number :NA
Filing Date :NA

(71)**Name of Applicant :**
1)TEIJIN PHARMA LIMITED
Address of Applicant :2 1 Kasumigaseki 3 chome Chiyoda ku Tokyo 1000013 Japan
(72)**Name of Inventor :**
1)NAKAMURA Kazuhiro
2)OGAWA Teppei

(57) Abstract :
Disclosed is an orally disintegrating tablet which masks bitterness, dissolves well, and which permanently retains good oral disintegration properties immediately following manufacture. The disclosed orally disintegrating tablet is formed by compression-molding an organic acid together with particles comprising active ingredient-containing nuclear particles covered by a layer containing water-insoluble polymers and/or enteric polymers.

No. of Pages : 13 No. of Claims : 6

(12) PATENT APPLICATION PUBLICATION
(19) INDIA
(22) Date of filing of Application :04/01/2013
(21) Application No.122/DELNP/2013 A
(43) Publication Date : 05/09/2014

(54) Title of the invention : PHENYLTHIOACETATE COMPOUNDS COMPOSITIONS AND METHODS OF USE

(51) International classification :C07C323/62,C07D213/24,A61K31/192
(31) Priority Document No :61/355317
(32) Priority Date :16/06/2010
(33) Name of priority country :U.S.A.
(86) International Application No :PCT/US2011/040586
Filing Date :15/06/2011
(87) International Publication No :WO 2011/159840
(61) Patent of Addition to Application Number :NA
Filing Date :NA
(62) Divisional to Application Number :NA
Filing Date :NA

(71)**Name of Applicant :**
1)ARDEA BIOSCIENCES INC.
Address of Applicant :4939 Directors Place San Diego CA 92121 U.S.A.
(72)**Name of Inventor :**
1)OUK Samedy
2)VERNIER Jean michel
3)GUNIC Esmir

(57) Abstract :
Described herein are compounds useful in the modulation of blood uric acid levels formulations containing them and methods of using them. In some embodiments the compounds described herein are used in the treatment or prevention of disorders related to aberrant levels of uric acid.

No. of Pages : 89 No. of Claims : 31

(12) PATENT APPLICATION PUBLICATION
(19) INDIA
(22) Date of filing of Application :04/01/2013
(21) Application No.127/DELNP/2013 A
(43) Publication Date : 05/09/2014

(54) Title of the invention : SYSTEMS AND METHODS FOR DYNAMIC MULTI LINK COMPILATION PARTITIONING

(51) International classification :G06F13/14,G06F1/32
(31) Priority Document No :61/352368
(32) Priority Date :07/06/2010
(33) Name of priority country :U.S.A.
(86) International Application No :PCT/US2011/039310
Filing Date :06/06/2011
(87) International Publication No :WO 2011/156285
(61) Patent of Addition to Application Number :NA
Filing Date :NA
(62) Divisional to Application Number :NA
Filing Date :NA

(71)**Name of Applicant :**
1)SULLIVAN Jason A.
Address of Applicant :299 South Main Street Suite 1300 Salt Lake City Utah 84111 U.S.A.
(72)**Name of Inventor :**
1)SULLIVAN Jason A.

(57) Abstract :
Systems and methods for dynamic multi link compilation partitioning. In particular some implementations of the present invention relate to systems and methods for connecting a computer processing unit to a video display through the use of a wide variety of video display connectors. The present invention further relates to a dynamic interface incorporating USB PCI express SATA IC and power management bus (PMBus) technologies. Further still some implementations of the present invention relate to an openly connected dynamic storage system whereby the storage capacity of a processing unit is increased by coupling additional storage components to the processing unit via a dynamic interface connector that is interposedly connected. Some implementations of the invention further relate to a customizable grouping of PCIe lanes to provide for a flexible allocation of the lanes to customize the characteristic of the board set while reducing the power consumption improving the bandwidth and speed of the device reducing the cost of the device and providing serial data transfer architecture to provide multiple busses.

No. of Pages : 56 No. of Claims : 20

(12) PATENT APPLICATION PUBLICATION
(21) Application No.10306/DELNP/2012 A
(19) INDIA
(22) Date of filing of Application :27/11/2012
(43) Publication Date : 05/09/2014

(54) Title of the invention : TUBE FEED FORMULATIONS AND METHODS FOR USING SAME

(51) International classification :A23L1/29,A61J15/00
(31) Priority Document No :61/359184
(32) Priority Date :28/06/2010
(33) Name of priority country :U.S.A.
(86) International Application No :PCT/US2011/042160
Filing Date :28/06/2011
(87) International Publication No :WO 2012/006080
(61) Patent of Addition to Application Number :NA
Filing Date :NA
(62) Divisional to Application Number :NA
Filing Date :NA

(71)**Name of Applicant :**
1)NESTEC S.A.
Address of Applicant :Avenue Nestle 55 CH 1800 Vevey Switzerland
(72)**Name of Inventor :**
1)MAGER Jennifer
2)ROUGHEAD Zamzam Fariba
3)STORM Heidi
4)TERESI James Scott

(57) Abstract :
Nutritional compositions that mimic whole foods and methods of using the nutritional compositions are provided. The nutritional compositions may include an increased number and variety of fruits and vegetables an increased variety of macronutrient sources and an increased amount of other components that are found in whole foods. The nutritional compositions may also include ethnicity specific meals and organic ingredients and provide emotional appeal to the patient and/or the patient s caregiver. Methods of administering such nutritional compositions to patients in need of same are also provided.

No. of Pages : 53 No. of Claims : 20

(12) PATENT APPLICATION PUBLICATION
(19) INDIA
(22) Date of filing of Application :27/11/2012
(21) Application No.10307/DELNP/2012 A
(43) Publication Date : 05/09/2014

(54) Title of the invention : ERGONOMIC SERVICE ARRANGEMENT FOR BEVERAGE MACHINE

(51) International classification :A47J31/44
(31) Priority Document No :10165365.7
(32) Priority Date :09/06/2010
(33) Name of priority country :EPO
(86) International Application No :PCT/EP2011/059580
Filing Date :09/06/2011
(87) International Publication No :WO 2011/154492
(61) Patent of Addition to Application Number :NA
Filing Date :NA
(62) Divisional to Application Number :NA
Filing Date :NA

(71)**Name of Applicant :**
1)NESTEC S.A.
Address of Applicant :Av. Nestl 55 CH 1800 Vevey Switzerland
(72)**Name of Inventor :**
1)CAHEN Antoine
2)GRANGER Eric

(57) Abstract :
A machine (1) for dispensing a beverage (50) has: a service arrangement (6 60); and a movable support (5) for supporting a user recipient (51) in a position for collecting the beverage. The support has: an unlocking position for giving user access to the service arrangement for servicing; and a locking position for preventing user access to the service arrangement for servicing.

No. of Pages : 21 No. of Claims : 15

(12) PATENT APPLICATION PUBLICATION
(19) INDIA
(22) Date of filing of Application :27/11/2012
(21) Application No.10308/DELNP/2012 A
(43) Publication Date : 05/09/2014

(54) Title of the invention : PORTION CAPSULE FOR PULVERULENT OR LIQUID BASIC DRINKS COMPOUNDS

(51) International classification :B65D85/804
(31) Priority Document No :20 2010 007 919.5
(32) Priority Date :12/06/2010
(33) Name of priority country :Germany
(86) International Application No :PCT/EP2011/057139
Filing Date :04/05/2011
(87) International Publication No :WO 2011/154203
(61) Patent of Addition to Application Number :NA
Filing Date :NA
(62) Divisional to Application Number :NA
Filing Date :NA

(71)**Name of Applicant :**
1)NESTEC S.A.
Address of Applicant :Avenue Nestl 55 CH 1800 Vevey Switzerland
(72)**Name of Inventor :**
1)MAHLICH David

(57) Abstract :
Cup-like portion capsule (1) which consists of an electrically non-conductive material and has a cup base side (2) and a filling side (3) closed by an electrically non-conductive or electrically conductive lid element (5), which is filled with pulverulent or liquid beverage base materials, and which can have its contents extracted in a brewing or preparation chamber of a beverage-making machine for preparing a beverage, characterized in that the cup-like portion capsule (1) is provided, on its cup base side (2), with at least one electrically conductive zone (6; 7; 8; 9; 10) which is connected to it and is designed and arranged such that, with the portion capsule (1) located in the brewing or preparation chamber and the latter being closed, it is in electrically conductive contact with electrically conductive contacts of a control device which are arranged in the brewing or preparation chamber.

No. of Pages : 11 No. of Claims : 7

(12) PATENT APPLICATION PUBLICATION
(19) INDIA
(22) Date of filing of Application :04/01/2013
(21) Application No.108/DELNP/2013 A
(43) Publication Date : 05/09/2014

(54) Title of the invention : A PERMEABLE PRESSURE SENSITIVE ADHESIVE

(51) International classification :A61L15/58,A61L24/04
(31) Priority Document No :PA 2010 70269
(32) Priority Date :18/06/2010
(33) Name of priority country :Denmark
(86) International Application No :PCT/DK2011/050220
Filing Date :17/06/2011
(87) International Publication No :WO 2011/157278
(61) Patent of Addition to Application Number :NA
Filing Date :NA
(62) Divisional to Application Number :NA
Filing Date :NA

(71)**Name of Applicant :**
1)COLOPLAST A/S
Address of Applicant :Holtedam 1 DK 3050 Humlebaek Denmark
(72)**Name of Inventor :**
1)BUUS Hasse
2)KONGEBO Tom Bjarke
3)CARLSEN Astrid

(57) Abstract :
The present invention relates to a pressure sensitive adhesive composition for skin application. The adhesive composition comprises 10 50% (w/w) based on the total adhesive composition of a polar part; 10 50% (w/w) based on the total adhesive composition of an apolar part; and 0 60% (w/w) based on the total adhesive composition of hydrocolloid.

No. of Pages : 32 No. of Claims : 31

(12) PATENT APPLICATION PUBLICATION
(19) INDIA
(22) Date of filing of Application :04/01/2013
(21) Application No.128/DELNP/2013 A
(43) Publication Date : 05/09/2014

(54) Title of the invention : METHOD PERTAINING TO AIR REMOVAL FROM A LIQUID SUPPLY SYSTEM AND A LIQUID SUPPLY SYSTEM

(51) International classification :F01N3/20,F01N11/00,F01N9/00
(31) Priority Document No :10506418
(32) Priority Date :21/06/2010
(33) Name of priority country :Sweden
(86) International Application No :PCT/SE2011/050790
Filing Date :20/06/2011
(87) International Publication No:WO 2011/162693
(61) Patent of Addition to Application Number :NA
Filing Date :NA
(62) Divisional to Application Number :NA
Filing Date :NA

(71)**Name of Applicant :**
1)Scania CV AB
Address of Applicant :S 151 87 Sdertlje Sweden
(72)**Name of Inventor :**
1)ERIKSSON Lars
2)CARLSSON Ulf

(57) Abstract :
The invention relates to a method pertaining to a liquid supply system whereby liquid is supplied to a feed device (230) via which liquid is supplied to at least one consumption point (250) comprising the steps of determining presence of air supplied upstream to the feed device (230) and when such presence is found of reducing an operating power of said feed device (230) compared with ordinary operation. The invention relates also to a computer programme product containing programme code (P) for a computer (200; 210) for implementing a method according to the invention. The invention relates also to a device and a motor vehicle (100) which is equipped with the device.

No. of Pages : 31 No. of Claims : 24

(12) PATENT APPLICATION PUBLICATION
(19) INDIA
(22) Date of filing of Application :30/11/2012
(21) Application No.10454/DELNP/2012 A
(43) Publication Date : 05/09/2014

(54) Title of the invention : COMPOSITIONS FOR TREATING SKIN

(51) International classification :A61K8/02,A61K8/19,A61K8/31
(31) Priority Document No :61/354118
(32) Priority Date :11/06/2010
(33) Name of priority country :U.S.A.
(86) International Application No :PCT/US2011/039907
Filing Date :10/06/2011
(87) International Publication No:WO 2011/156672
(61) Patent of Addition to Application Number :NA
Filing Date :NA
(62) Divisional to Application Number :NA
Filing Date :NA

(71)**Name of Applicant :**
1)THE PROCTER & GAMBLE COMPANY
Address of Applicant :One Procter & Gamble Plaza Cincinnati Ohio 45202 U.S.A.
(72)**Name of Inventor :**
1)WEI Karl Shiqing
2)SMITH Edward Dewey III
3)MANSFIELD Shawn Lynn
4)KOENIG Peter Herbert
5)JI Wei
6)SURADKAR Yogesh
7)BAGCHI Deepa
8)LOGOU Sujatha
9)JONES Stevan David

(57) Abstract :
A personal care composition comprising at least a first phase and a second phase wherein said first phase comprises a) an aqueous structured surfactant phase comprising STnS (sodium trideceth sulfate where n is the average number of moles of ethoxylate per molecule) where n is between about O and about 2.5;b);c) a structuring system comprising i. optionally a non ionic emulsifier ii. optionally from about 0 05% to about 5% by weight of said personal care composition of an associative polymer iii. an electrolyte; and said second phase comprises a) a benefit phase comprising from 1% to about 50% by weight of said personal care composition of a hydrophobic benefit agent.

No. of Pages : 60 No. of Claims : 15

(12) PATENT APPLICATION PUBLICATION
(19) INDIA
(22) Date of filing of Application :30/11/2012
(21) Application No.10455/DELNP/2012 A
(43) Publication Date : 05/09/2014

(54) Title of the invention : INSPECTION SYSTEM

(51) International classification :G01N21/00,H04N7/18
(31) Priority Document No :61/344150
(32) Priority Date :01/06/2010
(33) Name of priority country :U.S.A.
(86) International Application No :PCT/US2011/038534
Filing Date :31/05/2011
(87) International Publication No :WO 2011/153133
(61) Patent of Addition to Application Number :NA
Filing Date :NA
(62) Divisional to Application Number :NA
Filing Date :NA

(71)**Name of Applicant :**
1)ACKLEY MACHINE CORPORATION
Address of Applicant :1273 North Church Street Moorestown NJ 08057 U.S.A.
(72)**Name of Inventor :**
1)ACKLEY E. Michael
2)FORD Mark

(57) Abstract :
An inspection system is configured for use with a conveyer apparatus including carrier bars. Each carrier bar conveys pellet shaped articles along a predetermined path. The inspection system includes at least one camera unit for sensing a predetermined characteristic of the pellet shaped articles a removal unit and a controller. The removal unit downstream from the at least one camera unit removes selected pellet shaped article(s) from the carrier bar(s) depending on whether the characteristic is sensed by the at least one camera unit. The controller is in communication with the at least one camera unit and the removal unit. The controller provides a signal to the removal unit in accordance with the sensed characteristic. The removal unit includes a rotatable ejection drum having extended vacuum nozzles along its length equal to the number of articles conveyed in each earner bar. Each vacuum nozzle selectively removes article(s) from the earner bar(s) by suction.

No. of Pages : 70 No. of Claims : 26

(12) PATENT APPLICATION PUBLICATION
(19) INDIA
(22) Date of filing of Application :30/11/2012
(21) Application No.10456/DELNP/2012 A
(43) Publication Date : 05/09/2014

(54) Title of the invention : METHOD FOR PRODUCING COMPACT MODULES FOR CONSTRUCTION

(51) International classification :E04B1/348,B28B7/22,B28B19/00
(31) Priority Document No :P201000706
(32) Priority Date :31/05/2010
(33) Name of priority country :Spain
(86) International Application No :PCT/ES2010/000306
Filing Date :25/08/2010
(87) International Publication No :WO 2011/151475
(61) Patent of Addition to Application Number :NA
Filing Date :NA
(62) Divisional to Application Number :NA
Filing Date :NA

(71)**Name of Applicant :**
1)MEDR N LPEZ Francisco
Address of Applicant :C/ M¡laga 17 E 14460 Dos Torres (C³rdoba) Spain
(72)**Name of Inventor :**
1)MEDR N LPEZ Francisco

(57) Abstract :
The aim of the invention is to obtain prefabricated reinforced-concrete modules for a living space that may or may not be divided hito compartments, in which the six walls thereof are made as a single piece, which means that the resulting module is 100% monolithic in nature, which caneis out any vibration or expansi³n and prevens the appearance of cracks or dampness in the module. To that end, six pieces - floor, walls and ceiling - of interior lost shuttering are produced in the factory and joined to one another via the edges thereof using high-strength filler, the lower base having spacer plugs (9) on the floor or the chosen supporting surface, the outer face of the lost shuttering (1, 2, 3, 4, 5 and 6) having the utility installations (11) and, o thereon, the insulation material (12), where necessary, followed by a reinforcement (13) and, lastly, recoverable exterior shuttering (14).

No. of Pages : 14 No. of Claims : 3

(12) PATENT APPLICATION PUBLICATION
(21) Application No.1350/DEL/2012 A
(19) INDIA
(22) Date of filing of Application :02/05/2012
(43) Publication Date : 05/09/2014

(54) Title of the invention : SYSTEM AND METHOD FOR DETECTING CUTS IN WORKING FIBRE AND SWITCHING TO ANOTHER FIBRE

(51) International classification	:H04B 10/00	(71)**Name of Applicant :**
(31) Priority Document No	:NA	**1)CENTRE FOR DEVELOPMENT OF TELEMATICS (C-DOT)**
(32) Priority Date	:NA	Address of Applicant :Mehrauli New Delhi 110030 India India
(33) Name of priority country	:NA	
(86) International Application No	:NA	(72)**Name of Inventor :**
Filing Date	:NA	**1)VIPIN TYAGI**
(87) International Publication No	: NA	**2)ATUL KUMAR GUPTA**
(61) Patent of Addition to Application Number	:NA	**3)RAVI GUPTA**
Filing Date	:NA	**4)RAVINDER AMBARDAR**
(62) Divisional to Application Number	:NA	
Filing Date	:NA	

(57) Abstract :
THE PRESENT DISCLOSURE PROVIDES AN OPTICAL RECONFIGURABLE MODULE (ORM) TO DYNAMICALLY SWITCH FIBRE CHANNELS OF A COMMUNICATION NETWORK. THE ORM COMPRISES AN OPTICAL MONITOR TO RECEIVE AND MONITOR OPTICAL SIGNALS ON A WORKING FIBRE LINK OF A COMMUNICATION NETWORK. ALSO, THE ORM COMPRISES AN OPTICAL SWITCH TO RECEIVE OPTICAL OUTPUT DATA FROM THE OPTICAL MONITOR, SAID OPTICAL SWITCH SWITCHES THE WORKING FIBRE LINK TO A PROTECTION FIBRE CHANNEL AFTER DETECTING A FAILURE. FURTHER, THE ORM COMPRISES A RADIO FREQUENCY (RF) TRANSMITTER TRANSMITS CONTROL INFORMATION TO ONE OR MORE OPTICAL RECONFIGURABLE MODULES (ORMS). FURTHERMORE, THE ORM COMPRISES A CONTROL UNIT COMMUNICATIVELY CONNECTED TO ALL BLOCKS IN THE ORM, SAID CONTROL UNIT RECEIVES THE CONTROL INFORMATION FROM THE RF TRANSMITTER AND OPTICAL DATA FROM THE OPTICAL MONITOR, TRANSMITS INSTRUCTIONS TO THE OPTICAL SWITCH TO SWITCH THE WORKING FIBRE LINK TO PROTECTION LINK WHEN A LOS OCCURS IN THE RECEIVED OPTICAL SIGNAL.

No. of Pages : 20 No. of Claims : 10

(12) PATENT APPLICATION PUBLICATION
(19) INDIA
(22) Date of filing of Application :05/12/2012
(21) Application No.10591/DELNP/2012 A
(43) Publication Date : 05/09/2014

(54) Title of the invention : A PORTABLE MINI WASHER

(51) International classification :D06F23/04,D06F39/12
(31) Priority Document No :NA
(32) Priority Date :NA
(33) Name of priority country :NA
(86) International Application No :PCT/CN2010/073993
Filing Date :17/06/2010
(87) International Publication No :WO 2011/156956
(61) Patent of Addition to Application Number :NA
Filing Date :NA
(62) Divisional to Application Number :NA
Filing Date :NA

(71)**Name of Applicant :**
1)THE PROCTER & GAMBLE COMPANY
Address of Applicant :One Procter & Gamble Plaza Cincinnati OH 45202 U.S.A.
(72)**Name of Inventor :**
1)CHIO Joseph Tan
2)GROBBEN Bert J. L.
3)SUN Tao

(57) Abstract :
A portable mini washer having a casing a cleansing cup and a transparent window on the casing. The casing defines an interior space and has a front face a left side face in lateral connection with the front face a right side face in lateral connection with the front face and opposite the left side face and a top face in vertical connection with the front face the left side face and the right side face. The cleansing cup includes therein a stirring device and a transparent portion which faces the transparent window of the casing. The casing and the cleansing cup are manufactured separately; and the cleansing cup is put and fixed in the interior space.

No. of Pages : 27 No. of Claims : 10

(12) PATENT APPLICATION PUBLICATION
(19) INDIA
(22) Date of filing of Application :05/12/2012
(21) Application No.10593/DELNP/2012 A
(43) Publication Date : 05/09/2014

(54) Title of the invention : VITRONECTIN:KERATINOCYTE GROWTH FACTOR CHIMERAS

(51) International classification :C12N15/62,A61P17/00,C07K19/00
(31) Priority Document No :12/793386
(32) Priority Date :03/06/2010
(33) Name of priority country :U.S.A.
(86) International Application No :PCT/AU2011/000700
Filing Date :03/06/2011
(87) International Publication No :WO 2011/150470
(61) Patent of Addition to Application Number :NA
Filing Date :NA
(62) Divisional to Application Number :NA
Filing Date :NA

(71)**Name of Applicant :**
1)QUEENSLAND UNIVERSITY OF TECHNOLOGY
Address of Applicant :Gardens Point Campus 2 George Street Brisbane Queensland 4000 Australia
(72)**Name of Inventor :**
1)UPTON Zee

(57) Abstract :
Isolated protein complexes are provided comprising keratinocyte growth factor and vitronectin or at least domains thereof that enable binding to and activation of both a keratinocyte growth factor receptor and an integrin receptor for vitronectin. These protein complexes include synthetic proteins where the keratinocyte growth factor and vitronectin sequences are joined by a linker sequence. In particular forms vitronectin sequences do not include a C terminal heparin binding domain. Also provided are uses of these protein complexes for stimulating or inducing cell migration and/or proliferation in wound healing tissue engineering cosmetic and therapeutic treatments such as skin replacement skin replenishment and treatment of burns where epithelial cell migration is required. In other embodiments the invention provides inhibition of cancer cell metastasis particularly in relation to breast cancer.

No. of Pages : 41 No. of Claims : 27

(12) PATENT APPLICATION PUBLICATION
(19) INDIA
(22) Date of filing of Application :05/12/2012
(21) Application No.10595/DELNP/2012 A
(43) Publication Date : 05/09/2014

(54) Title of the invention : ARTICLE OF FURNITURE

(51) International classification :A47C7/44,A47C3/12,A47C7/40
(31) Priority Document No :61/353321
(32) Priority Date :10/06/2010
(33) Name of priority country :U.S.A.
(86) International Application No:PCT/US2011/038342
Filing Date :27/05/2011
(87) International Publication No :WO 2011/156153
(61) Patent of Addition to Application Number :NA
Filing Date :NA
(62) Divisional to Application Number :NA
Filing Date :NA

(71)**Name of Applicant :**
1)KNOLL INC.
Address of Applicant :1235 Water Street East Greenville Pennsylvania 18041 U.S.A.
(72)**Name of Inventor :**
1)VAN HEKKEN Hendrik R.

(57) Abstract :
An article of furniture (1) includes a base (2) a seat frame (12) supported by the base (2) and a back frame (11) attached to the seat frame (12). The back frame (11) includes an upper portion (13) and a lower portion (14). The upper portion (13) is connected to the lower portion (14) by at least one first elastomeric member such that the upper portion (13) is moveable relative to the lower portion (14). The upper portion (13) is moveable from an upright position to at least one reclined position. In some embodiments of the article of furniture (1) the at least one first elastomeric member is a strap composed of a polymeric material such as for example a thermoplastic polyester elastomer or a polymeric material containing at least one elastomer. In some embodiments the article of furniture (1) may be designed as a chair a lounge chair or an office chair.

No. of Pages : 45 No. of Claims : 20

(12) PATENT APPLICATION PUBLICATION
(21) Application No.1357/DEL/2012 A
(19) INDIA
(22) Date of filing of Application :03/05/2012
(43) Publication Date : 05/09/2014

(54) Title of the invention : TRIANGULAR SUBARRAY FOR MITIGATION OF SUBARRAY EFFECT IN MULTI BEAM ACTIVE PHASED ARRAY RADAR

(51) International classification :H01Q
(31) Priority Document No :NA
(32) Priority Date :NA
(33) Name of priority country :NA
(86) International Application No :NA
Filing Date :NA
(87) International Publication No : NA
(61) Patent of Addition to Application Number :NA
Filing Date :NA
(62) Divisional to Application Number :NA
Filing Date :NA

(71)**Name of Applicant :**
1)THE DIRECTOR GENERAL DEFENCE RESEARCH & DEVELOPMENT ORGANISATION (DRDO)
Address of Applicant :Ministry of Defence Government of India Room No. 348 B-wing DRDO Bhawan Rajaji Marg New Delhi-110105 India India
(72)**Name of Inventor :**
1)UPENDRA SHANKAR PANDEY
2)VIRENDRA KUMAR
3)LOURDU GNANA MICHAEL PRAKASAM

(57) Abstract :
Embodiments of the present disclosure relate to an antenna array comprising plurality of subarrays each subarray includes predetermined number of radiating elements. The radiating elements are arranged in horizontal rows and vertical columns in triangular grid. Pluralities of separate subarray of the radiating elements include a first row comprising a first plurality of subarray and a second row comprising a second plurality of subarrays. The subarrays of the first and second plurality of subarrays are horizontally non-overlapping with one another. Horizontally continuous subarrays do not share elements with adjacent continuous subarray. The subarray which is adjacent to two vertical subarrays will overlap its elements with the vertically adjacent subarray on its left and right and will form triangular grid. The subarrays make triangular overlap throughout the full height of array. Triangular subarrays decrease the effective width of respective subarray which provides great degree of grating lobe suppression.

No. of Pages : 28 No. of Claims : 12

(12) PATENT APPLICATION PUBLICATION
(19) INDIA
(22) Date of filing of Application :04/01/2013
(21) Application No.136/DELNP/2013 A
(43) Publication Date : 05/09/2014

(54) Title of the invention : COLLAR STYLE COVER AND HOUSING ASSEMBLY FOR FIELD DEVICE

(51) International classification :H05K5/02,H05K7/14,G05B23/02
(31) Priority Document No :12/807758
(32) Priority Date :14/09/2010
(33) Name of priority country :U.S.A.
(86) International Application No :PCT/US2011/001586
Filing Date :13/09/2011
(87) International Publication No :WO 2012/036735
(61) Patent of Addition to Application Number :NA
Filing Date :NA
(62) Divisional to Application Number :NA
Filing Date :NA

(71)**Name of Applicant :**
1)ROSEMOUNT INC.
Address of Applicant :12001 Technology Drive Eden Prairie MN 55344 U.S.A.
(72)**Name of Inventor :**
1)PERRAULT Aaron Andrew
2)HERZOG Daniel Justin

(57) Abstract :
A field device assembly (40; 40 ; 40) includes a housing body (48) a first circuitry subassembly (54) mounted to the housing body (48) and positioned at least partially within the housing body (48) a first cover chassis (50A; 50B; 92) having a shoulder (94) mating flame path restricting structures (96A 96B) positioned on the first cover chassis (50A; 50B; 92) and the housing body (48) a first threaded collar (52A; 52B) configured to fit about the first cover chassis (50A; 50B; 92) and to permit rotation relative to the first cover chassis (50A; 50B; 92) and a second circuitry subassembly (58A; 58B) secured to the first cover chassis (50A; 50B; 92). The first threaded collar (52A; 52B) is threadably engaged with the housing body (48) and includes an engagement structure (90) engaged with the shoulder (94) of the first cover chassis (50A; 50B; 92) to secure the first cover chassis (50A; 50B; 92) to the housing body (48). The second circuitry subassembly (58A; 58B) includes an electrical connector (60A; 62A) configured for linear insertion engagement with a mating electrical connector (60B; 62B) within the housing body (48) to electrically connect the first and second circuitry subassemblies.

No. of Pages : 29 No. of Claims : 20

(12) PATENT APPLICATION PUBLICATION
(21) Application No.1606/DEL/2012 A
(19) INDIA
(22) Date of filing of Application :26/05/2012
(43) Publication Date : 05/09/2014

(54) Title of the invention : Injector Tip Assembly And Method Of Fuel Injection

(51) International classification :F23D
(31) Priority Document No :NA
(32) Priority Date :NA
(33) Name of priority country :NA
(86) International Application No :NA
Filing Date :NA
(87) International Publication No : NA
(61) Patent of Addition to Application Number :NA
Filing Date :NA
(62) Divisional to Application Number :NA
Filing Date :NA

(71)**Name of Applicant :**
1)General Electric Company
Address of Applicant :1 River Road Schenectady New York 12345 U.S.A U.S.A.
(72)**Name of Inventor :**
1)CHANDRASHEKAR Natesh
2)DAVIS Dustin Wayne
3)STEINHAUS Benjamin Campbell
4)TAYLA Shashishekara Sitharamarao

(57) Abstract :
AN INJECTOR TIP FOR A NOZZLE (10) INCLUDES A CENTER BODY (12) HAVING A PLURALITY OF CENTER BODY OPENINGS (16) AT A DISTAL END (18) CONFIGURED TO INJECT A FUEL FLOW (32) INTO A COMBUSTION ZONE (34) OF A COMBUSTOR. ONE OR MORE FUEL PASSAGES (20; 22; 24) ARE ARRANGED AROUND THE CENTER BODY (12) AND ARE CONFIGURED TO INJECT A FUEL SLURRY INTO THE COMBUSTION ZONE (34). ONE OR MORE OXYGEN PASSAGES (20 22 24) ARE ARRANGED AROUND THE CENTER BODY (12) AND ARE CONFIGURED TO INJECT AN OXYGEN FLOW (36) INTO THE COMBUSTION ZONE (34).

No. of Pages : 12 No. of Claims : 10

(12) PATENT APPLICATION PUBLICATION
(21) Application No.1607/DEL/2012 A
(19) INDIA
(22) Date of filing of Application :27/05/2012
(43) Publication Date : 05/09/2014

(54) Title of the invention : SYSTEM AND METHODS OF AIR CONDITIONING IN AUTOMOBILES

(51) International classification :F25B
(31) Priority Document No :NA
(32) Priority Date :NA
(33) Name of priority country :NA
(86) International Application No :NA
Filing Date :NA
(87) International Publication No : NA
(61) Patent of Addition to Application Number :NA
Filing Date :NA
(62) Divisional to Application Number :NA
Filing Date :NA

(71)**Name of Applicant :**
1)Sonu Lodhi
Address of Applicant :Village- Chalakpur Post Office-Sahnaul ehsil-Atrauli; District- Aligarh Uttar Pradesh India India
(72)**Name of Inventor :**
1)Sonu Lodhi

(57) Abstract :
Disclosed are system and methods of air conditioning in automobiles. The air conditioning system powered by exhaust gases of an automobile engine comprises atleast a turbine driven by energy of the exhaust gases; atleast an evaporator unit containing an refrigerant such that the refrigerant absorbs heat from the air inside the automobile and evaporates into a gaseous state; atleast a compressor connected to the evaporator to compress the gaseous state refrigerant such that the compressor is driven by the turbine; atleast a condenser connected to the compressor to liquify the gaseous state refrigerant; and atleast an expansion valve connected to the condenser for expanding and cooling the liquified refrigerant.

No. of Pages : 13 No. of Claims : 8

(12) PATENT APPLICATION PUBLICATION
(21) Application No.1701/DEL/2012 A
(19) INDIA
(22) Date of filing of Application :01/06/2012
(43) Publication Date : 05/09/2014

(54) Title of the invention : Sensor Assembly For Use With A Fluid Transport System And Method Of Assembling Same

(51) International classification :G01D
(31) Priority Document No :NA
(32) Priority Date :NA
(33) Name of priority country :NA
(86) International Application No :NA
Filing Date :NA
(87) International Publication No : NA
(61) Patent of Addition to Application Number :NA
Filing Date :NA
(62) Divisional to Application Number :NA
Filing Date :NA

(71)**Name of Applicant :**
1)General Electric Company
Address of Applicant :1 River Road Schenectady New York 12345 U.S.A U.S.A.
(72)**Name of Inventor :**
1)FELDMAN Solomon
2)NGUYEN Toan Huu

(57) Abstract :
A SENSOR ASSEMBLY (200) FOR USE WITH A FLUID TRANSPORT SYSTEM (100) IS PROVIDED. THE SENSOR ASSEMBLY INCLUDES AT LEAST TWO SENSORS (220) THAT ARE CONFIGURED TO MEASURE A RATE OF FLOW OF A FLUID CHANNELED THROUGH A PIPELINE (116) OF THE FLUID TRANSPORT SYSTEM. MOREOVER; THE SENSOR ASSEMBLY INCLUDES AN ANNULAR COLLAR (204) THAT IS COUPLED TO THE TWO SENSORS. THE COLLAR INCLUDES AT LEAST A FIRST OPENING (216) AND AT LEAST A SECOND OPENING (320) DEFINED THEREIN. THE FIRST OPENING AND THE SECOND OPENING ARE EACH SIZED TO RECEIVE THE TWO SENSORS THEREIN SUCH THAT THE TWO SENSORS ARE SUBSTANTIALLY COAXIALLY ALIGNED WITH EACH OTHER. A FIRST SENSOR (412) OF THE TWO SENSORS IS POSITIONED DOWNSTREAM FROM A SECOND SENSOR (416) OF THE TWO SENSORS.

No. of Pages : 19 No. of Claims : 10

(12) PATENT APPLICATION PUBLICATION
(19) INDIA
(22) Date of filing of Application :30/11/2012

(21) Application No.10443/DELNP/2012 A
(43) Publication Date : 05/09/2014

(54) Title of the invention : STRIKING MECHANISM

(51) International classification :B25D11/06,B23B45/16
(31) Priority Document No :NA
(32) Priority Date :NA
(33) Name of priority country :NA
(86) International Application No :PCT/CN2010/073704
Filing Date :09/06/2010
(87) International Publication No :WO 2011/153689
(61) Patent of Addition to Application Number :NA
Filing Date :NA
(62) Divisional to Application Number :NA
Filing Date :NA

(71)**Name of Applicant :**
1)BOSCH POWER TOOLS (CHINA) CO. LTD.
Address of Applicant :No. 567 Bin Kang Road Bin Jiang District Hangzhou Zhejiang 310052 China
(72)**Name of Inventor :**
1)CHEN Tie
2)CHAI Haihua
3)LI Yi

(57) Abstract :
A striking mechanism for a hand held power tool comprising: a hammer (12) and a piston (14) to produce a striking pulse; a shaft (16) to drive said piston (14); and at least one connecting rod (18) to connect said shaft (16) to said piston (14); wherein said shaft (16) comprises a transmission portion (20) which is provided to convert a rotary motion of said shaft (16) into a reciprocating motion of said piston (14).

No. of Pages : 13 No. of Claims : 9

(12) PATENT APPLICATION PUBLICATION
(21) Application No.10444/DELNP/2012 A
(19) INDIA
(22) Date of filing of Application :30/11/2012
(43) Publication Date : 05/09/2014

(54) Title of the invention : GAS PUMP WITH REDUCED NOISE GENERATION

(51) International classification :F04C18/344
(31) Priority Document No :10 2010 029 551.5
(32) Priority Date :01/06/2010
(33) Name of priority country :Germany
(86) International Application No :PCT/EP2011/055887
Filing Date :14/04/2011
(87) International Publication No :WO 2011/151102
(61) Patent of Addition to Application Number :NA
Filing Date :NA
(62) Divisional to Application Number :NA
Filing Date :NA

(71)**Name of Applicant :**
1)ROBERT BOSCH GMBH
Address of Applicant :Postfach 30 02 20 70442 Stuttgart Germany
(72)**Name of Inventor :**
1)JOHANNING Andre
2)KRUEGER Hartmut

(57) Abstract :
A gas pump comprises a pump rotor for conveying gaseous medium, a pump housing in which the pump rotor is rotatably accommodated, a delimiting element which closes off the pump housing in the axial direction, and a closure element which, together with the delimiting element, forms a sound absorber. The delimiting element has an opening for the passage of a medium between the pump housing and the sound absorber, and has a web which extends in the axial direction and which runs around the opening in the radial direction, wherein the closure element bears against the web in the axial direction. 150 ---+.-14--230

No. of Pages : 15 No. of Claims : 10

(12) PATENT APPLICATION PUBLICATION
(21) Application No.1573/DEL/2012 A
(19) INDIA
(22) Date of filing of Application :22/05/2012
(43) Publication Date : 05/09/2014

(54) Title of the invention : Integrated water refilling arrangement with plumbing joints overpressure protection for trains and methods thereof.

(51) International classification :B67D
(31) Priority Document No :NA
(32) Priority Date :NA
(33) Name of priority country :NA
(86) International Application No :NA
Filing Date :NA
(87) International Publication No : NA
(61) Patent of Addition to Application Number :NA
Filing Date :NA
(62) Divisional to Application Number :NA
Filing Date :NA

(71)**Name of Applicant :**
1)Sanjeev Kumar
Address of Applicant :1201 URBAN ESTATE PHASE-1 JALANDHAR PUNJAB-144001 India.
(72)**Name of Inventor :**
1)Sanjeev Kumar

(57) Abstract :
Plurality train coaches storage fluid tank (1) are connected with a common inlet hose(7) through snap on type couplers(7B); Thereby enabling the water refill crew to access all the tanks from plurality selected inlets in rake. The filling system is equipped with water at pressure such that the water is refilled as quickly as possible. The individual tanks are provided with water level sensors(2) to measure the level inside each tank and operates its relevant inlet valves through electronic means such that high pressure water is stopped from damaging the tank™s plumbing joints and causing leakages. Thereby enabling timely and efficiently refill of the trains and providing more passenger comfort.

No. of Pages : 16 No. of Claims : 10

(12) PATENT APPLICATION PUBLICATION
(21) Application No.36/DELNP/2013 A
(19) INDIA
(22) Date of filing of Application :02/01/2013
(43) Publication Date : 05/09/2014

(54) Title of the invention : BALL JOINT FOR PIPE CONNECTION AND PIPE CONNECTION

(51) International classification :F16L27/04
(31) Priority Document No :2004985
(32) Priority Date :28/06/2010
(33) Name of priority country :Netherlands
(86) International Application No :PCT/NL2011/050462
Filing Date :27/06/2011
(87) International Publication No :WO 2012/002805
(61) Patent of Addition to Application Number :NA
Filing Date :NA
(62) Divisional to Application Number :NA
Filing Date :NA

(71)**Name of Applicant :**
1)VOSTA LMG B.V.
Address of Applicant :Klaprozenweg 75 NL 1033 NN Amsterdam Netherlands
(72)**Name of Inventor :**
1)MENHEERE Marco Dani«l

(57) Abstract :
A ball joint (1) for a pipe connection comprises shell parts (3 4) surrounding one another in a sealing manner which each define a respective longitudinal centre line and which are rotatable in relation to one another between an aligned position in which the longitudinal centre lines coincide and a rotated position in which the longitudinal centre lines form an angle with one another which differs from zero. The shell parts together enclose an axial passage which extends between the connecting pieces or sleeves (20) (21) of the shell parts (3 4) facing away from one another. In the outermost shell part (4) a lining (13) is provided of which the inner lining surface (14) has a curvature corresponding to the curvature of the outer surface (5) of the inner shell part (3).

No. of Pages : 13 No. of Claims : 13

(12) PATENT APPLICATION PUBLICATION
(19) INDIA
(22) Date of filing of Application :02/01/2013
(21) Application No.51/DELNP/2013 A
(43) Publication Date : 05/09/2014

(54) Title of the invention : CONNECTING CONTACT

(51) International classification :H05K3/34,H01L23/495
(31) Priority Document No :10 2010 026 312.5
(32) Priority Date :06/07/2010
(33) Name of priority country :Germany
(86) International Application No :PCT/EP2011/060973
Filing Date :29/06/2011
(87) International Publication No :WO 2012/004177
(61) Patent of Addition to Application Number :NA
Filing Date :NA
(62) Divisional to Application Number :NA
Filing Date :NA

(71)**Name of Applicant :**
1)PHOENIX CONTACT GMBH & CO. KG
Address of Applicant :Flachsmarktstrae 8 32825 Blomberg Germany
(72)**Name of Inventor :**
1)HOLSTE Dieter
2)ROSEMEYER Ulrich

(57) Abstract :
The invention relates to a connecting contact for SM D-components, for solderable contact with a board. The connecting contact comprises a metal material (2) and the metal material (2) at least partially comprises a coating (1) with a different metal material. The connecting contact has a substantially laminar contact area (7) for solderable contact to a board (3) and comprises edge regions (4, 5, 6). At least one segment of the edge region (4, 5, 6) is at a distance from the laminar contact area (7), so that a soldered fillet is formed for a soldered contact to a board (3). The invention further proposes an associated method for producing connecting contacts for SMD components for solderably contacting a board (3). Said method comprises the steps of punching metal strips (1, 2), bending the metal strips (1, 2) so that a conducting region (8) and a laminar contact area (7) are produced, and forming the edge areas (4, 5, 6) at the laminar contact area (7), and that at least one segment of the edge area (4, 5,6) is at a distance from the laminar contact area (7) so that a soldered fillet is formed for a soldered connection to a circuit board (3).

No. of Pages : 19 No. of Claims : 10

(12) PATENT APPLICATION PUBLICATION
(21) Application No.1368/DEL/2012 A
(19) INDIA
(22) Date of filing of Application :04/05/2012
(43) Publication Date : 05/09/2014

(54) Title of the invention : Method for crowd funding the movie prior to or during production thereof using Limited Liability Partnership (LLP) and by accepting donations

(51) International classification	:G06Q	(71)**Name of Applicant :**
(31) Priority Document No	:NA	**1)Vikram Bahadur Singh**
(32) Priority Date	:NA	Address of Applicant :83 A South Anarkali Extn Delhi India
(33) Name of priority country	:NA	(72)**Name of Inventor :**
(86) International Application No	:NA	**1)Vikram Bahadur Singh**
Filing Date	:NA	
(87) International Publication No	: NA	
(61) Patent of Addition to Application Number	:NA	
Filing Date	:NA	
(62) Divisional to Application Number	:NA	
Filing Date	:NA	

(57) Abstract :
A method for crowd funding the production of a movie by presenting a storyboard synopsis of the yet-to-be-produced or under production movie on Internet Web site; and allowing interested potential viewers of the movie to either become a partner in the LLP (Limited Liability Partnership) producing the movie or make monetary or non-monetary donations or buy movie related merchandise

No. of Pages : 6 No. of Claims : 16

(12) PATENT APPLICATION PUBLICATION
(19) INDIA
(22) Date of filing of Application :01/01/2013
(21) Application No.22/DELNP/2013 A
(43) Publication Date : 05/09/2014

(54) Title of the invention : FACE DIRECTIONAL RECOGNITION DRIVEN DISPLAY CONTROL

(51) International classification :G06Q30/00,G06Q50/00
(31) Priority Document No :NA
(32) Priority Date :NA
(33) Name of priority country :NA
(86) International Application No :PCT/JP2010/063893
Filing Date :11/08/2010
(87) International Publication No :WO 2012/020510
(61) Patent of Addition to Application Number :NA
Filing Date :NA
(62) Divisional to Application Number :NA
Filing Date :NA

(71)**Name of Applicant :**
1)Telefonaktiebolaget L M Ericsson (publl)
Address of Applicant :SE 164 83 Stockholm Sweden
(72)**Name of Inventor :**
1)HJELM Johan
2)ODA Toshikane
3)MURAKAMI Shingo

(57) Abstract :
To present a more attractive image showing a product before a customer for advertisement a display control system is provided. This system is supposed to be deployed in different sites of a store shop or shopping mall. The system includes: a server for storing image data representing a plurality of images corresponding to advertisement contents; a controller connected to the server; and a plurality of displays and cameras arranged near an exhibited product for advertisement. When a person is near the exhibited product a plurality of cameras capture the person from different angles captured image data is sent to the controller and processed and analyzed by the controller. Then the controller infers the person s interest selects a more suitable image to the person based on the person s interest and transmits image data to any of the displays so as to change a displayed image according to the person s interest.

No. of Pages : 57 No. of Claims : 18

(12) PATENT APPLICATION PUBLICATION
(19) INDIA
(22) Date of filing of Application :02/01/2013
(21) Application No.29/DELNP/2013 A
(43) Publication Date : 05/09/2014

(54) Title of the invention : PESTICIDAL COMPOSITIONS

(51) International classification :A01N25/24,A01N57/00,A01N31/14
(31) Priority Document No :61/361013
(32) Priority Date :02/07/2010
(33) Name of priority country :U.S.A.
(86) International Application No :PCT/US2011/037901
Filing Date :25/05/2011
(87) International Publication No :WO 2012/003060
(61) Patent of Addition to Application Number :NA
Filing Date :NA
(62) Divisional to Application Number :NA
Filing Date :NA

(71)**Name of Applicant :**
1)BAYER INTELLECTUAL PROPERTY GMBH
Address of Applicant :Alfred Nobel Strasse 10 40789 Monheim Germany
(72)**Name of Inventor :**
1)REID Byron
2)KIJLSTRA Johan
3)ROSENFELDT Frank
4)NENTWIG Guenther
5)GUTSMANN Volker
6)SONNECK Rainer

(57) Abstract :
The present invention relates to compositions for the control of pests to processes for their preparation and to methods of treating surfaces with such formulations for the sustained weather resistant control of pests. The composition includes a pesticide and an aqueous polymer dispersion.

No. of Pages : 35 No. of Claims : 20

(12) PATENT APPLICATION PUBLICATION
(21) Application No.37/DELNP/2013 A
(19) INDIA
(22) Date of filing of Application :02/01/2013
(43) Publication Date : 05/09/2014

(54) Title of the invention : OPTICALLY REDUNDANT FIRE DETECTOR FOR FALSE ALARM REJECTION

(51) International classification :G08B17/06
(31) Priority Document No :12/827757
(32) Priority Date :30/06/2010
(33) Name of priority country :U.S.A.
(86) International Application No :PCT/US2011/041627
Filing Date :23/06/2011
(87) International Publication No :WO 2012/012083
(61) Patent of Addition to Application Number :NA
Filing Date :NA
(62) Divisional to Application Number :NA
Filing Date :NA

(71)**Name of Applicant :**
1)KNOWFLAME INC.
Address of Applicant :200 Westside Square Suite 320 Huntsville AL 35802 U.S.A.
(72)**Name of Inventor :**
1)HARCHANKO John

(57) Abstract :
A system for confirming the detection of a fire using a plurality of radiation or flame sensors each equipped with a radiation detector and an optical filter having a spectral transmission characteristic in which at least one optical filter is redundant to at least one other optical filter. The result is a system having operationally redundant sensors. In use if a fire is detected by one of the redundant sensors without including the other redundant radiation sensor in the fire detection calculation then a fire detection algorithm can switch to the other operationally redundant sensor to check for confirmation of a fire. Due to the spatial separation and if the object is small and close a different result will be obtained with the redundant detector being used in the calculation compared to the primary detector that is associated with the redundant detector.

No. of Pages : 22 No. of Claims : 23

(12) PATENT APPLICATION PUBLICATION
(21) Application No.53/DELNP/2013 A
(19) INDIA
(22) Date of filing of Application :02/01/2013
(43) Publication Date : 05/09/2014

(54) Title of the invention : IMAGE ENCODING METHOD AND IMAGE DECODING METHOD

(51) International classification :H04N7/32
(31) Priority Document No :NA
(32) Priority Date :NA
(33) Name of priority country :NA
(86) International Application No :PCT/JP2010/062007
Filing Date :15/07/2010
(87) International Publication No :WO 2012/008039
(61) Patent of Addition to Application Number :NA
Filing Date :NA
(62) Divisional to Application Number :NA
Filing Date :NA

(71)**Name of Applicant :**
1)KABUSHIKI KAISHA TOSHIBA
Address of Applicant :1 1 Shibaura 1 chome Minato ku Tokyo 1058001 Japan
(72)**Name of Inventor :**
1)YAMAGUCHI Jun
2)TANIZAWA Akiyuki

(57) Abstract :
An image encoding method according to an embodiment includes setting (112) a combination of a vertical transform matrix and a horizontal transform 5 matrix corresponding to the target image based on a predetermined relation. The combination includes any of a plurality of transform matrices including a first transform matrix and a second transform matrix which increases a coefficient density compared to the first 10 transform matrix if a one-dimensional orthogonal transformation in a direction orthogonal to a line of a group of reference pixels on at least one line is performed on the prediction error in the intraprediction mode in which the group of reference pixels is referenced to generate an intra-prediction image. The method includes transforming (102) the prediction error using the combination of the vertical transform matrix and the horizontal transform matrix, to obtain transform coefficients

No. of Pages : 153 No. of Claims : 16

(12) PATENT APPLICATION PUBLICATION
(19) INDIA
(22) Date of filing of Application :03/12/2012
(21) Application No.10499/DELNP/2012 A
(43) Publication Date : 05/09/2014

(54) Title of the invention : SELECTIVE EMITTER SOLAR CELLS FORMED BY A HYBRID DIFFUSION AND ION IMPLANTATION PROCESS

(51) International classification :H01L31/18,H01L31/068,H01L21/265
(31) Priority Document No :12/793334
(32) Priority Date :03/06/2010
(33) Name of priority country :U.S.A.
(86) International Application No :PCT/US2011/036720
Filing Date :17/05/2011
(87) International Publication No :WO 2011/152986
(61) Patent of Addition to Application Number :NA
Filing Date :NA
(62) Divisional to Application Number :NA
Filing Date :NA

(71)**Name of Applicant :**
1)SUNIVA INC.
Address of Applicant :5775 Peachtree Industrial Boulevard Norcross GA 30092 U.S.A.
(72)**Name of Inventor :**
1)ROHATGI Ajeet
2)YELUNDUR Vijay
3)DAVIS Hubert Preston
4)CHANDRASEKARAN Vinodh
5)DAMIANI Ben

(57) Abstract :
Solar cells and methods for their manufacture are disclosed. An example method may include providing a silicon substrate and introducing dopant to one or more selective regions of the front surface of the substrate by ion implantation. The substrate may be subjected to a single high temperature anneal cycle. Additional dopant atoms may be introduced for diffusion into the front surface of the substrate during the single anneal cycle. A selective emitter may be formed on the front surface of the substrate such that the one or more selective regions of the selective emitter layer are more heavily doped than the remainder of the selective emitter layer. Associated solar cells are also provided.

No. of Pages : 37 No. of Claims : 20

(12) PATENT APPLICATION PUBLICATION
(19) INDIA
(22) Date of filing of Application :02/01/2013
(21) Application No.32/DELNP/2013 A
(43) Publication Date : 05/09/2014

(54) Title of the invention : LOW IRRITATING CLEAR CLEANSING COMPOSITIONS WITH RELATIVELY LOW PH

(51) International classification :A61Q19/10,A61K8/81
(31) Priority Document No :12/822329
(32) Priority Date :24/06/2010
(33) Name of priority country :U.S.A.
(86) International Application No :PCT/US2011/041604
Filing Date :23/06/2011
(87) International Publication No :WO 2011/163463
(61) Patent of Addition to Application Number :NA
Filing Date :NA
(62) Divisional to Application Number :NA
Filing Date :NA

(71)**Name of Applicant :**
1)JOHNSON & JOHNSON CONSUMER COMPANIES INC.
Address of Applicant :Grandview Road Skillman NJ 08558 U.S.A.
(72)**Name of Inventor :**
1)GUNN Euen Thomas Graham Ekman
2)WALTERS Russel M.
3)GANDOLFI Lisa R.
4)LAHEY Kevin C.

(57) Abstract :
The methods and compositions of this invention relate to compositions having low irritation characteristics in combination with one or more additional characteristics for example relatively high clarity relatively high foaming and/or combinations thereof as well as methods of making and using such compositions. These compositions have low pH values and are useful in cleansing the skin.

No. of Pages : 60 No. of Claims : 15

(12) PATENT APPLICATION PUBLICATION
(21) Application No.35/DELNP/2013 A
(19) INDIA
(22) Date of filing of Application :02/01/2013
(43) Publication Date : 05/09/2014

(54) Title of the invention : PURIFIER COMPRISING A SOLIDS SEPARATION DEVICE AND METHOD FOR WASTEWATER PURIFICATION

(51) International classification	:C02F3/12,C02F3/28	(71)**Name of Applicant :**
(31) Priority Document No	:10168907.3	**1)PAQUES I.P. B.V.**
(32) Priority Date	:08/07/2010	Address of Applicant :Tjalke de Boerstrjitte 24 NL 8561 EL Balk Netherlands
(33) Name of priority country	:EPO	
(86) International Application No	:PCT/NL2011/050500	(72)**Name of Inventor :**
Filing Date	:08/07/2011	**1)PRINS Rienk**
(87) International Publication No	:WO 2012/005592	
(61) Patent of Addition to Application Number	:NA	
Filing Date	:NA	
(62) Divisional to Application Number	:NA	
Filing Date	:NA	

(57) Abstract :
The invention relates to a purifier (100) for the purification of a fluid such as wastewater the purifier comprising: a reaction vessel (10) for a fluid the reaction vessel having a reaction chamber (11) and a bottom (12); a downer (14) having a top end (91) and a bottom end (92) wherein the top end of the downer is connected to a fluid collector (13) to collect fluid from the reaction vessel (10) and the downer is arranged to transport the fluid towards the bottom (12) of the reaction vessel; a solids separation device (20) arranged to separate solids from liquid the solids separation device comprising a fluid inlet (72) arranged to introduce fluid into the solids separation device and a liquid discharge (56) arranged to remove separated liquid from the solids separation device; wherein the fluid inlet of the solids separation device (20) is connected to the bottom end (92) of the downer and the solids separation device is located on or near the bottom (12) of the reaction vessel.

No. of Pages : 33 No. of Claims : 12

(12) PATENT APPLICATION PUBLICATION
(19) INDIA
(22) Date of filing of Application :02/01/2013
(21) Application No.47/DELNP/2013 A
(43) Publication Date : 05/09/2014

(54) Title of the invention : VEHICLE INTERIOR TRIM PART IN PARTICULAR INSIDE DOOR LINING

(51) International classification :B60R13/02
(31) Priority Document No :10 2010 025 941.1
(32) Priority Date :02/07/2010
(33) Name of priority country :Germany
(86) International Application No :PCT/EP2011/003304
Filing Date :04/07/2011
(87) International Publication No :WO 2012/000688
(61) Patent of Addition to Application Number :NA
Filing Date :NA
(62) Divisional to Application Number :NA
Filing Date :NA

(71)**Name of Applicant :**
1)JOHNSON CONTROLS INTERIORS GMBH & CO. KG
Address of Applicant :M¼lhausener Str. 35 47929 Grefrath Germany
(72)**Name of Inventor :**
1)SCHIDAN Alexander
2)BRENDEL Bernd
3)KALUS Holger
4)DEVECI Cueneyt

(57) Abstract :
The present invention relates to a vehicle interior trim part with a first part and a second part which is fastened thereto, wherein the first and the + second part have different coefficients of length expansion with respect to at least one influencing variable.

No. of Pages : 20 No. of Claims : 11

(12) PATENT APPLICATION PUBLICATION
(21) Application No.54/DELNP/2013 A
(19) INDIA
(22) Date of filing of Application :03/01/2013
(43) Publication Date : 05/09/2014

(54) Title of the invention : SYSTEM FOR VERIFYING AN ITEM IN A PACKAGE

(51) International classification :G06K5/00
(31) Priority Document No :61/354633
(32) Priority Date :14/06/2010
(33) Name of priority country :U.S.A.
(86) International Application No :PCT/US2011/001063
Filing Date :10/06/2011
(87) International Publication No :WO 2011/159338
(61) Patent of Addition to Application Number :NA
Filing Date :NA
(62) Divisional to Application Number :NA
Filing Date :NA

(71)**Name of Applicant :**
1)TRUTAG TECHNOLOGIES INC.
Address of Applicant :1946 Young Street Suite 288 Honolulu HI 96826 U.S.A.
(72)**Name of Inventor :**
1)LEARMONTH Timothy
2)ONEILL Michael P.
3)PEARSON Peter
4)ZHOU Ting

(57) Abstract :
A system verifying an item in a package comprises a package producer and a verifier. The package producer produces a package with a label wherein the package includes an item each with one or more selected tag identifiers that are placed in a location on the item. The verifier verifies the item using 1) the one or more selected tag identifiers as detected using a spectral measurement or 2) a location or a shape of the one or more selected tag identifiers on the item and 3) the label as read using a label reader.

No. of Pages : 21 No. of Claims : 36

(12) PATENT APPLICATION PUBLICATION
(19) INDIA
(22) Date of filing of Application :29/11/2012
(21) Application No.10398/DELNP/2012 A
(43) Publication Date : 05/09/2014

(54) Title of the invention : NOVEL PYRIMIDINE DERIVATIVES

(51) International classification :C07D403/14,A61K31/506,A61P35/00
(31) Priority Document No :10163597.7
(32) Priority Date :21/05/2010
(33) Name of priority country :EPO
(86) International Application No :PCT/EP2011/058271
Filing Date :20/05/2011
(87) International Publication No :WO 2011/144742
(61) Patent of Addition to Application Number :NA
Filing Date :NA
(62) Divisional to Application Number :NA
Filing Date :NA

(71)**Name of Applicant :**
1)CHEMILIA AB
Address of Applicant :Alfred Nobels All 10 S 141 52 Huddinge Sweden
(72)**Name of Inventor :**
1)H–GBERG Marita
2)JOHANSSON Tommy
3)DAHLSTEDT Emma
4)SMITT Olof

(57) Abstract :
THE INVENTION PROVIDES NOVEL PYRIMIDINE DERIVATIVES OF FORMULA I, TO METHODS OF PREPARING SUCH COMPOUNDS, TO PHARMACEUTICAL COMPOSITIONS CONTAINING SUCH COMPOUNDS,AND TO METHODS FOR USING SUCH COMPOUNDS IN TREATMENT OF DISEASES INCLUDING CANCER; WHEREIN R1, R2, R3, R4, R5, L, A, D, E, Z, AND Y ARE AS DEFINED IN THE SPECIFICATION.

No. of Pages : 126 No. of Claims : 31

(12) PATENT APPLICATION PUBLICATION
(19) INDIA
(22) Date of filing of Application :04/01/2013
(21) Application No.104/DELNP/2013 A
(43) Publication Date : 05/09/2014

(54) Title of the invention : METHOD AND DEVICE PERTAINING TO COOLING OF DOSING UNITS OF SCR SYSTEMS

(51) International classification :F01N3/20,F01N9/00,F01N11/00
(31) Priority Document No :10506384
(32) Priority Date :21/06/2010
(33) Name of priority country :Sweden
(86) International Application No :PCT/SE2011/050786
Filing Date :20/06/2011
(87) International Publication No:WO 2011/162690
(61) Patent of Addition to Application Number :NA
Filing Date :NA
(62) Divisional to Application Number :NA
Filing Date :NA

(71)**Name of Applicant :**
1)SCANIA CV AB
Address of Applicant :S 151 87 Sdertlje Sweden
(72)**Name of Inventor :**
1)LILJESTRAND Andreas
2)BREMBERG Per
3)CARLSSON Ulf
4)ERIKSSON Lars

(57) Abstract :
The invention relates to a method for cooling a dosing unit (250) pertaining to SCR systems for exhaust cleaning comprising the step after cessation of exhaust flow of cooling a reducing agent dosing unit (250) by means of reducing agent supplied to it. The method comprises also the step of running a feed device to supply said coolant reducing agent at reduced power compared with ordinary operation. The invention relates also to a computer programme product containing programme code (P) for a computer (200; 210) for implementing a method according to the invention. The invention relates also to an SCR system and a motor vehicle which is equipped with the SCR system.

No. of Pages : 28 No. of Claims : 18

(12) PATENT APPLICATION PUBLICATION
(19) INDIA
(22) Date of filing of Application :04/01/2013
(21) Application No.112/DELNP/2013 A
(43) Publication Date : 05/09/2014

(54) Title of the invention : TREAD PROTECTION DEVICE

(51) International classification :B60C11/11,B60C11/12
(31) Priority Document No :1055455
(32) Priority Date :06/07/2010
(33) Name of priority country :France
(86) International Application No :PCT/EP2011/061369
Filing Date :06/07/2011
(87) International Publication No :WO 2012/004285
(61) Patent of Addition to Application Number :NA
Filing Date :NA
(62) Divisional to Application Number :NA
Filing Date :NA

(71)**Name of Applicant :**
1)COMPAGNIE GENERALE DES ETABLISSEMENTS MICHELIN
Address of Applicant :12 cours Sablon F 63000 Clermont Ferrand France
2)MICHELIN RECHERCHE ET TECHNIQUE S.A.
(72)**Name of Inventor :**
1)GAYTON Christophe
2)ORAISON Stphane
3)QUANTINET Benjamin
4)VANDAELE Matthieu

(57) Abstract :
The invention relates to a tire having a radial carcass reinforcement including a tread (1) having a thickness E, said tread (1) having a rolling surface for making contact with a road surface and including at least one cutout (5) opening onto the rolling surface so as to form ridges (50), said cutout (5) extending into the tread up to a total depth H equal at most to the thickness E of the tread, wherein said cutout (5) is provided between the tread surface and a depth Hl equal at most to the total o depth H, in the form of an incision (5 1) having a width D suitable for enabling same to at least partially close for routine rolling conditions of the tire. The tire further consists of, nearby, i.e. at a minimum distance from said ridge at most equal to five times the width D of the cutout, at least one ridge (50) of said cutout, and, on the rolling surface, at least one cavity (6) having a depth h that is small as compared to the depth of the cutout, i.e. at most equal to 30% of the depth H, said at least one cavity (6) reducing the compressive stiffhess of the tread in the vicinity of said at least one ridge (50).

No. of Pages : 28 No. of Claims : 10

(12) PATENT APPLICATION PUBLICATION
(19) INDIA
(22) Date of filing of Application :02/01/2013

(21) Application No.28/DELNP/2013 A
(43) Publication Date : 05/09/2014

(54) Title of the invention : INTEGRATED WORKFLOW AND DATABASE TRANSACTIONS

(51) International classification :G06F17/30,G06F17/40,G06Q10/00
(31) Priority Document No :61/351839
(32) Priority Date :04/06/2010
(33) Name of priority country :U.S.A.
(86) International Application No :PCT/US2011/038531
Filing Date :31/05/2011
(87) International Publication No :WO 2011/153130
(61) Patent of Addition to Application Number :NA
Filing Date :NA
(62) Divisional to Application Number :NA
Filing Date :NA

(71)**Name of Applicant :**
1)MCL SYSTEMS LIMITED
Address of Applicant :Attn: Swami Muthuvelu 10550 Linden Lake Plaza Suite 301 Manassas Virginia 20109 U.S.A.
(72)**Name of Inventor :**
1)MUTHUVELU Swami

(57) Abstract :
A computer implemented method and system to integrate workflow and database transactions is provided. Also provided is a computer readable storage medium that includes a program. The computer implemented method includes assigning a data structure stored in a database to one or more workflow processes. The computer implemented method also includes automatically creating an instance of the workflow in response to the data structure being populated with a new record.

No. of Pages : 30 No. of Claims : 20

(12) PATENT APPLICATION PUBLICATION
(19) INDIA
(22) Date of filing of Application :03/01/2013
(21) Application No.55/DELNP/2013 A
(43) Publication Date : 05/09/2014

(54) Title of the invention : PERSONAL CARE COMPOSITION ADDITIVE FOR APPLICATION ON KERATIN SUBSTRATES TO PROVIDE LONG LASTING BENEFITS

(51) International classification :A61K8/34,A61K8/73,A61K8/81
(31) Priority Document No :61/358226
(32) Priority Date :24/06/2010
(33) Name of priority country :U.S.A.
(86) International Application No :PCT/US2011/041820
Filing Date :24/06/2011
(87) International Publication No:WO 2011/163589
(61) Patent of Addition to Application Number :NA
Filing Date :NA
(62) Divisional to Application Number :NA
Filing Date :NA

(71)**Name of Applicant :**
1)HERCULES INCORPORATED
Address of Applicant :500 Hercules Road Wilmington DE 19808 U.S.A.
(72)**Name of Inventor :**
1)ERAZO MAJEWICZ Paquita
2)KROON Gijsbert
3)LE PHAM Thi Hong Lan
4)NUUTINEN Tuttu Maria

(57) Abstract :
The present invention relates to a personal care composition additive for use on keratin substrates in order to provide long lasting benefits to the keratin substrate such as in conditioning systems such as 2/1 shampoo s leave on and rinse off conditioners for hair and skin or for imparting greater water resistance to such personal care compositions as sunscreens or cosmetics.

No. of Pages : 30 No. of Claims : 26

(12) PATENT APPLICATION PUBLICATION
(19) INDIA
(22) Date of filing of Application :04/01/2013
(21) Application No.134/DELNP/2013 A
(43) Publication Date : 05/09/2014

(54) Title of the invention : DATA RETRIEVAL SYSTEM

(51) International classification :G05B19/418,B21B37/00,G06Q50/00
(31) Priority Document No :NA
(32) Priority Date :NA
(33) Name of priority country :NA
(86) International Application No :PCT/JP2010/063471
Filing Date :09/08/2010
(87) International Publication No :WO 2012/020468
(61) Patent of Addition to Application Number :NA
Filing Date :NA
(62) Divisional to Application Number :NA
Filing Date :NA

(71)**Name of Applicant :**
1)TOSHIBA MITSUBISHI ELECTRIC INDUSTRIAL SYSTEMS CORPORATION
Address of Applicant :13 16 Mita 3 chome Minato ku Tokyo 1080073 Japan
(72)**Name of Inventor :**
1)OZAWA Tomoyuki
2)MATSUI Hirofumi

(57) Abstract :
Provided is a data retrieval system wherein a user can perform an arbitrary search which meets his/her purpose, using various data collected in an industrial plant, and the retrieval result can be displayed in a desired display format with respect to each product. In the data retrieval system, a data collection device (3) collects product data with respect to LAN each product produced in a rolling line of an industrial plant, and the product data is accumulated m a data accumulation device (4). The data I collection device (3) also collects control data continuously generated in the industrial plant, and accumulates the data in the data accumulation device (4). A data retrieval device (6) performs a search using both the product data and the control data accumulated in the data accumulation device (4), on the basis retrieval conditions and an output method designated by the user, with reference to rolling area definition information in a storage device, and outputs the retrieval result for each product.

No. of Pages : 34 No. of Claims : 3

(12) PATENT APPLICATION PUBLICATION
(19) INDIA
(22) Date of filing of Application :01/01/2013
(21) Application No.23/DELNP/2013 A
(43) Publication Date : 05/09/2014

(54) Title of the invention : MEDIATION SERVER CONTROL METHOD THEREFOR COMMUNICATION DEVICE CONTROL METHOD THEREFOR COMMUNICATION SYSTEM AND COMPUTER PROGRAM

(51) International classification :H04W48/18,G06F13/00,H04W8/20
(31) Priority Document No :NA
(32) Priority Date :NA
(33) Name of priority country :NA
(86) International Application No :PCT/JP2010/064124
Filing Date :16/08/2010
(87) International Publication No :WO 2012/023213
(61) Patent of Addition to Application Number :NA
Filing Date :NA
(62) Divisional to Application Number :NA
Filing Date :NA

(71)**Name of Applicant :**
1)Telefonaktiebolaget L M Ericsson (publ)
Address of Applicant :Se 164 83 Stockholm Sweden
(72)**Name of Inventor :**
1)HJELM Johan
2)PERKUHN Heiko

(57) Abstract :
A mediation server which is able to communicate with a plurality of account managing servers (104) and mediates requests for issuing subscription information transmitted from a plurality of communication devices between each communication device and any one of the plurality of account managing servers (104) the mediation server comprising a selection unit configured to select the account managing server to which the request is to be transmitted based on information regarding a current operational status of each account managing server stored in a database when the request is received from the communication device and a transmission unit configured to transmit the request for issuing the subscription information to the selected account managing server.

No. of Pages : 45 No. of Claims : 12

(12) PATENT APPLICATION PUBLICATION
(21) Application No.43/DELNP/2013 A
(19) INDIA
(22) Date of filing of Application :02/01/2013
(43) Publication Date : 05/09/2014

(54) Title of the invention : PUMP FOR DELIVERING A PRODUCT COMPRISING A PISTON SLIDING IN THE METERING CHAMBER

(51) International classification :B05B11/00
(31) Priority Document No :1054607
(32) Priority Date :10/06/2010
(33) Name of priority country :France
(86) International Application No :PCT/FR2011/051319
Filing Date :09/06/2011
(87) International Publication No :WO 2011/154664
(61) Patent of Addition to Application Number :NA
Filing Date :NA
(62) Divisional to Application Number :NA
Filing Date :NA

(71)**Name of Applicant :**
1)REXAM HEALTHCARE LA VERPILLIERE
Address of Applicant :20 avenue de la Gare F 38290 La Verpilliere France
(72)**Name of Inventor :**
1)DONNETTE Xavier
2)CAMBA Jos
3)SAHM Philippe

(57) Abstract :
The pump (12) comprises a piston (32) slidably mounted in a metering chamber (72), the piston (28) comprising; a support (32), a membrane (34) acting as a nonreturn valve, allowing product to pass into the metering chamber (72), made of a first material, and an lment (36) for pressing the membrane (34) firmly against the support (32), comprising a skirt bearing sealing means which ensure the sealed sliding of the piston (28) in the metering chamber (72), the pressing lment (36) being made of a second material diffrent from the first material of the membrane, being attached to the membrane (34), and comprising a surface for pressing the membrane (34) which keeps the membrane (34) deformed against the support (32) in order to close the nonreturn valve.

No. of Pages : 27 No. of Claims : 10

(12) PATENT APPLICATION PUBLICATION
(21) Application No.57/DELNP/2013 A
(19) INDIA
(22) Date of filing of Application :03/01/2013
(43) Publication Date : 05/09/2014

(54) Title of the invention : METHOD FOR PROTECTING A COMPONENT OF A HYDRAULIC MACHINE AGAINST EROSION

(51) International classification :F03B11/00
(31) Priority Document No :10 55051
(32) Priority Date :24/06/2010
(33) Name of priority country :France
(86) International Application No :PCT/FR2011/051428
Filing Date :21/06/2011
(87) International Publication No :WO 2011/161374
(61) Patent of Addition to Application Number :NA
Filing Date :NA
(62) Divisional to Application Number :NA
Filing Date :NA

(71)**Name of Applicant :**
1)ALSTOM Hydro France
Address of Applicant :3 Avenue Andr Malraux F 92300 Levallois Perret France
(72)**Name of Inventor :**
1)PRIGENT Serge

(57) Abstract :
This method for protecting a component of a hydraulic machine against erosion comprises steps involving preparing in the flat state several sheets (300) of polymerized synthetic material in applying a coat of adhesive (200) to one side of each sheet (300) and in lying (F) the sheets (300) on the surface of the component that is to be covered with the layer of coating.

No. of Pages : 19 No. of Claims : 15

(12) PATENT APPLICATION PUBLICATION
(21) Application No.109/DELNP/2013 A
(19) INDIA
(22) Date of filing of Application :04/01/2013
(43) Publication Date : 05/09/2014

(54) Title of the invention : METHOD AND SYSTEM OF AUTOMATIC DETERMINATION OF GEOMETRIC ELEMENTS CHARACTERIZING A BONE DEFORMATION FROM 3D IMAGE

(51) International classification :G06T7/00,G06T17/00
(31) Priority Document No :61/355206
(32) Priority Date :16/06/2010
(33) Name of priority country :U.S.A.
(86) International Application No :PCT/IB2011/001687
Filing Date :16/06/2011
(87) International Publication No :WO 2011/158117
(61) Patent of Addition to Application Number :NA
Filing Date :NA
(62) Divisional to Application Number :NA
Filing Date :NA

(71)**Name of Applicant :**
1)A² SURGICAL
Address of Applicant :Saills F 38830 Saint Pierre dAllevard France
(72)**Name of Inventor :**
1)CHABANAS Laurence
2)LAVALLEE Stphane
3)TONETTI Jr´me
4)BYRD Thomas
5)KELLY Bryan Talmadge
6)LARSON Christopher

(57) Abstract :
The invention relates to a method for automatically determining on a bone comprising a head portion contiguous to a neck portion parameters for characterizing a bump deformation on the head neck junction of the bone from acquired 3D medical image the method comprising the following steps: i) constructing a 3D surface model of the bone; ii) fitting a sphere on the spherical portion of the head of the bone; iii) determining a neck axis characterizing the neck portion of the bone; iv) determining from the fitted sphere and the neck axis a clock face referential on the head of the bone rotating around the neck axis; v) determining a 3D curve on the 3D surface model characterizing the head neck junction of the bone; vi) determining from the 3D curve the summit of the bump deformation of the head neck junction of the bone; vii) determining from said summit of the bump deformation first and a second parameters (a3D iMax) characterizing the maximum bump deformation of the head neck junction of the bone.

No. of Pages : 26 No. of Claims : 12

(12) PATENT APPLICATION PUBLICATION
(21) Application No.1487/DEL/2012 A
(19) INDIA
(22) Date of filing of Application :15/05/2012
(43) Publication Date : 05/09/2014

(54) Title of the invention : AIR TRAPPER WIND TURBINE

(51) International classification :F03D
(31) Priority Document No :NA
(32) Priority Date :NA
(33) Name of priority country :NA
(86) International Application No :NA
Filing Date :NA
(87) International Publication No : NA
(61) Patent of Addition to Application Number :NA
Filing Date :NA
(62) Divisional to Application Number :NA
Filing Date :NA

(71)**Name of Applicant :**
1)KENDRIYA VIDYALAYA SANGATHAN
Address of Applicant :18 Institutional Area Shaheed Jeet Singh Marg New Delhi 110602 India
(72)**Name of Inventor :**
1)Mita Adhikari
2)Ravi Raja Mishra
3)D C Pathak

(57) Abstract :
The air trapper wind turbine consist of a hollow cylindrical body with six triangular trappers mounted over it.The shaft of the turbine is positioned along the centre of mass of the cylinder through ball bearing arrangement.Each trapper trap the air incident on it gets reflected and applies force to the trapper which makes it rotate.The turbine rotates in the same direction even if the direction of the wind reverses.

No. of Pages : 17 No. of Claims : 10

(12) PATENT APPLICATION PUBLICATION
(19) INDIA
(22) Date of filing of Application :01/01/2013
(21) Application No.25/DELNP/2013 A
(43) Publication Date : 05/09/2014

(54) Title of the invention : METHOD FOR CONTROLLING A HYBRID VEHICLE

(51) International classification :B60W20/00,B60W30/18,B60W10/06
(31) Priority Document No :A 1120/2010
(32) Priority Date :01/07/2010
(33) Name of priority country :Austria
(86) International Application No :PCT/EP2011/060070
Filing Date :16/06/2011
(87) International Publication No :WO 2012/000806
(61) Patent of Addition to Application Number :NA
Filing Date :NA
(62) Divisional to Application Number :NA
Filing Date :NA

(71)**Name of Applicant :**
1)AVL LIST GMBH
Address of Applicant :Hans List Platz 1 A 8020 Graz Austria
(72)**Name of Inventor :**
1)KORSUNSKY Evgeny
2)STOLZ Michael
3)EBNER Peter

(57) Abstract :
The invention relates to a method for controlling a hybrid vehicle (I), in which at least two assemblies (2, 3) provide torque for a hybrid vehicle drive, wherein the current driving state and the current operating configuration (K) of the components of the drive train are detected. An evaluation variable (R) is respectively calculated at least for all operating modes (MI, M2, M3, M4) of the hybrid vehicle (1) which are relevant in the current driving state, wherein two operating modes (MA, MB) of the hybrid vehicle (1) which are relevant in the current driving state are selected. The first operating mode (MA) has the highest value of all the evaluation variables R, and the second operating mode (Me) has the highest value of all the evaluation variables R of those operating modes (MI, M2), whose necessary operating configuration (Kl) corresponds to the current operating configuration (K). On the basis of the selection, requirements (AK) for a new operating configuration (K) for implementing the selected first operating mode (MA), and requirements (AD) of dynamic variables, preferably torque requirements for the respectively selected second operating mode (Ms), are determined, preferably by means of calculation rules for dynamic variables.

No. of Pages : 27 No. of Claims : 13

(12) PATENT APPLICATION PUBLICATION
(21) Application No.13/DELNP/2013 A
(19) INDIA
(22) Date of filing of Application :01/01/2013
(43) Publication Date : 05/09/2014

(54) Title of the invention : FILAMENTS COMPRISING A NON PERFUME ACTIVE AGENT NONWOVEN WEBS AND METHODS FOR MAKING SAME

(51) International classification :D01F1/10,C11D17/04
(31) Priority Document No :61/361146
(32) Priority Date :02/07/2010
(33) Name of priority country :U.S.A.
(86) International Application No :PCT/US2011/042565
Filing Date :30/06/2011
(87) International Publication No :WO 2012/003300
(61) Patent of Addition to Application Number :NA
Filing Date :NA
(62) Divisional to Application Number :NA
Filing Date :NA

(71)**Name of Applicant :**
1)THE PROCTER & GAMBLE COMPANY
Address of Applicant :One Procter & Gamble Plaza Cincinnati Ohio 45202 U.S.A.
(72)**Name of Inventor :**
1)GLENN Robert Wayne Jr.
2)GORDON Gregory Charles
3)SIVIK Mark Robert
4)RICHARDS Mark Ryan
5)HEINZMAN Stephen Wayne
6)JAMES Michael David
7)REYNOLDS Geoffrey William
8)TROKHAN Paul Dennis
9)WEISMAN Paul Thomas
10)HAMAD EBRAHIMPOUR Alyssandrea Hope
11)DENOME Frank William
12)HODSON Stephen Joseph

(57) Abstract :
Filaments that contain a filament forming material and an additive nonwoven webs and methods for making such filaments are provided. The level of one or more additives in the filament is 35% or more weight on a dry filament basis

No. of Pages : 116 No. of Claims : 15

(12) PATENT APPLICATION PUBLICATION
(19) INDIA
(22) Date of filing of Application :04/01/2013
(21) Application No.130/DELNP/2013 A
(43) Publication Date : 05/09/2014

(54) Title of the invention : HYDRAULIC PUMP OR MOTOR

(51) International classification :F04B1/22,F03C1/253
(31) Priority Document No :2010189839
(32) Priority Date :26/08/2010
(33) Name of priority country :Japan
(86) International Application No :PCT/JP2011/068441
Filing Date :12/08/2011
(87) International Publication No :WO 2012/026348
(61) Patent of Addition to Application Number :NA
Filing Date :NA
(62) Divisional to Application Number :NA
Filing Date :NA

(71)**Name of Applicant :**
1)KOMATSU LTD.
Address of Applicant :2 3 6 Akasaka Minato ku Tokyo 1078414 Japan
(72)**Name of Inventor :**
1)IIDA Takeo
2)NAKAGAWA Tadashi
3)SAKAI Tomohiro

(57) Abstract :
A n axial hydraulic pump configured in such 画 a manner that the cylinder block (Q having cylinder bores formed around the rotation axis slides relative t o the valve plate (7) having a high-pressure-side port and a low-pres sure-side port and that the amount o f reciprocation o f the pistons within the cylinder bores i s controlled b y the tilt o f the swash plate. The axial hydraulic pump i s provided with: a remaining pressure regeneration circuit (30) which i s a pipe path for connecting a top dead center-side com munication opening (1) and a bottom dead center-side communication opening (32); and communication holes (41 - 1 t o 41-8) which are respectively provided t o the cylin der bores o f the cylinder block (6) and which, as the cylin |- 上死点der block (6) rotates, connect the cylinder ports (26-1 t o 26-8) o f the cylinder bores and the top dead center-side and bottom dead center- side communication openings (1, 32). The bottom dead center-side communication opening (32) i s provided on the bottom dead center side at a posi < tion which i s offset, i n the direction in which the cylinder block (6) rotates forward, b y an angle D Q fixim the line connecting the position o f the top dead center- side commu nication opening (1) and the rotation axis (C). The config uration reduces the generation o f the discharge pulsation b y the remaining pressure regeneration circuit (30).

No. of Pages : 33 No. of Claims : 5

(12) PATENT APPLICATION PUBLICATION
(21) Application No.34/DELNP/2013 A
(19) INDIA
(22) Date of filing of Application :02/01/2013
(43) Publication Date : 05/09/2014

(54) Title of the invention : CAPACITANCE ELECTRODE STRUCTURE FOR MEASURING MOISTURE

(51) International classification :G01N27/22
(31) Priority Document No :NA
(32) Priority Date :NA
(33) Name of priority country :NA
(86) International Application No :PCT/IB2010/001654
Filing Date :06/07/2010
(87) International Publication No :WO 2012/004621
(61) Patent of Addition to Application Number :NA
Filing Date :NA
(62) Divisional to Application Number :NA
Filing Date :NA

(71)**Name of Applicant :**
1)BRY AIR PROKON SAGL
Address of Applicant :Viale A. Volta 16 6830 Chiasso Switzerland
(72)**Name of Inventor :**
1)SAMMARTINI Marco

(57) Abstract :
Device (1) for measuring moisture of materials flowing in the shape of dried liquid or gaseous granulates or in the shape of powders in at least one duct disposed at least partially along an axis (X X) through which the material of which the moisture has to be measured flows comprising: at least one capacitor (Cx) wherein the material of which the moisture has to be measured flows characterized in that the capacitor (CX) comprises: at least two metallic rings (3) coaxially mounted to said axis X X and adjacent to an inner wall of the duct through which the material of which the moisture has to be measured flows; at least one dielectric element (5) having: dielectric constant substantially linear with the temperature changing and thermal expansion lower than a = 27 x 10 /°C.

No. of Pages : 30 No. of Claims : 15

(12) PATENT APPLICATION PUBLICATION
(21) Application No.599/DEL/2013 A
(19) INDIA
(22) Date of filing of Application :01/03/2013
(43) Publication Date : 05/09/2014

(54) Title of the invention : IDIYAPPAM MAKING MACHINE

(51) International classification :B44F
(31) Priority Document No :NA
(32) Priority Date :NA
(33) Name of priority country :NA
(86) International Application No :NA
Filing Date :NA
(87) International Publication No : NA
(61) Patent of Addition to Application Number :NA
Filing Date :NA
(62) Divisional to Application Number :NA
Filing Date :NA

(71)**Name of Applicant :**
1)PATHIPAN SIVARASA
Address of Applicant :819 OAKSIDE CRESCENT, KANATA ON K2W 0A3, CANADA
(72)**Name of Inventor :**
1)PATHIPAN SIVARASA

(57) Abstract :
This ldiyappam making machine has a cylindrical barrel to contain the dough mixture, a piston to press the dough mixture within the barrel through a extrusion disc with small holes, a ram to move the piston up and down, a gear system to ease the operation, a handle to operate the machine, eight gears to transfer the force, four shafts to transfer the force and rotating tray to catch the Idiyappam. All the above parts are mounted in a base structure and the structure will be placed on a table and hold tightly by means of four suction cups. In this machine, the rotating tray and the piston will be operated simultaneously by turning the handle using manual power. This claim also covers future modification to electrical power version.

No. of Pages : 13 No. of Claims : 24

(12) PATENT APPLICATION PUBLICATION
(21) Application No.10409/DELNP/2012 A
(19) INDIA
(22) Date of filing of Application :29/11/2012
(43) Publication Date : 05/09/2014

(54) Title of the invention : BYPASS PISTON PORT AND METHODS OF MANUFACTURING A BYPSS PISTON PORT FOR A SERIES PROGRESSIVE DIVIDER VALVE

(51) International classification :F16K 31/363
(31) Priority Document No :61/348,854
(32) Priority Date :27/05/2010
(33) Name of priority country :U.S.A.
(86) International Application No :PCT/US2011/000959
Filing Date :27/05/2011
(87) International Publication No : NA
(61) Patent of Addition to Application Number :NA
Filing Date :NA
(62) Divisional to Application Number :NA
Filing Date :NA

(71)**Name of Applicant :**
1)GRACO MINNESOTA INC.
Address of Applicant :88 11th Avenue NE Minneapolis Minnesota 55413 USA
(72)**Name of Inventor :**
1)KLAPHAKE Andrew J.
2)KUSCHEL Anthony J.

(57) Abstract :
A series progressive divider valve comprises a valve body and pistons. A fluid inlet extend into the valve body. Stations are disposed in the valve body and extend from a first end to a second end; each station comprises piston stations extending through the valve body and a bypass station fluidly isolating the first end form the second end. The piston stations comprise a piston bore and a piston. The bypass stations comprise first and second fluid passages extending from the first and second ends to positions inside the valve body. Outlet bores extend into the valve body and each comprises first and second sets of outlet bores. Porting forms passageways connecting the stations to each other and with the outlet bores such that when high pressure fluid is applied to the inlet the pistons reciprocates from the first end....

No. of Pages : 35 No. of Claims : 20

(12) PATENT APPLICATION PUBLICATION
(19) INDIA
(22) Date of filing of Application :04/01/2013
(21) Application No.125/DELNP/2013 A
(43) Publication Date : 05/09/2014

(54) Title of the invention : SYSTEMS AND METHODS FOR PROVIDING A UNIVERSAL COMPUTING SYSTEM

(51) International classification :G06F1/00,G06F1/20,G06F13/14
(31) Priority Document No :61/352349
(32) Priority Date :07/06/2010
(33) Name of priority country :U.S.A.
(86) International Application No :PCT/US2011/039508
Filing Date :07/06/2011
(87) International Publication No:WO 2011/156417
(61) Patent of Addition to Application Number :NA
Filing Date :NA
(62) Divisional to Application Number :NA
Filing Date :NA

(71)**Name of Applicant :**
1)SULLIVAN Jason A.
Address of Applicant :299 South Main Street Suite 1300 Salt Lake City Utah 84111 U.S.A.
(72)**Name of Inventor :**
1)SULLIVAN Jason A.

(57) Abstract :
The present invention relates to systems and methods for providing a universal computing system. Implementations include a modular motherboard having two or more electronic circuit boards that are connected to form a motherboard. The two or more electronic circuit boards each include a security key structure on a connector for providing a keyed connector therebetween. Computing components may be provided on two of the major surfaces of the first electronic circuit board circuit board. Components are disclosed in which the computing system will not turn on unless the first printed circuit board is electrically connected to the second printed circuit board. A heat sink is disclosed that may be used in the universal computing system. A customizable encasement is disclosed. An expandable memory device is disclosed.

No. of Pages : 178 No. of Claims : 20

(12) PATENT APPLICATION PUBLICATION
(19) INDIA
(22) Date of filing of Application :02/01/2013
(21) Application No.33/DELNP/2013 A
(43) Publication Date : 05/09/2014

(54) Title of the invention : CYCLOHEXYL AZETIDINYL ANTAGONISTS OF CCR2

(51) International classification :C07D401/14,C07D403/12,C07D403/14
(31) Priority Document No :61/353003
(32) Priority Date :09/06/2010
(33) Name of priority country :U.S.A.
(86) International Application No :PCT/US2011/039724
Filing Date :09/06/2011
(87) International Publication No :WO 2011/156554
(61) Patent of Addition to Application Number :NA
Filing Date :NA
(62) Divisional to Application Number :NA
Filing Date :NA

(71)**Name of Applicant :**
1)JANSSEN PHARMACEUTICA NV
Address of Applicant :Turnhoutseweg 30 B2340 Beerse Belgium
(72)**Name of Inventor :**
1)ZHANG Xuqing
2)SUI Zhihua
3)LANTER James C.

(57) Abstract :
12The present invention comprises compounds of Formula (I). wherein: R R X and Z are as defined in the specification. The invention also comprises a method of preventing treating or ameliorating a syndrome disorder or disease wherein said syndrome disorder or disease is type II diabetes obesity and asthma. The invention also comprises a method of inhibiting CCR2 activity in a mammal by administration of a therapeutically effective amount of at least one compound of Formula (I).

No. of Pages : 201 No. of Claims : 20

(12) PATENT APPLICATION PUBLICATION
(21) Application No.64/DELNP/2013 A
(19) INDIA
(22) Date of filing of Application :03/01/2013
(43) Publication Date : 05/09/2014

(54) Title of the invention : METHOD FOR DETERMINING BONE RESECTION ON A DEFORMED BONE SURFACE FROM FEW PARAMETERS

(51) International classification :G06T19/20,G06T17/30,A61B5/00
(31) Priority Document No :61/355207
(32) Priority Date :16/06/2010
(33) Name of priority country :U.S.A.
(86) International Application No :PCT/IB2011/001683
Filing Date :16/06/2011
(87) International Publication No :WO 2012/014036
(61) Patent of Addition to Application Number :NA
Filing Date :NA
(62) Divisional to Application Number :NA
Filing Date :NA

(71)**Name of Applicant :**
1)A² SURGICAL
Address of Applicant :Saills F 38830 Saint pierre dallevard France
(72)**Name of Inventor :**
1)CHABANAS Laurence
2)LAVALLEE Stphane
3)TONETTI Jr´me
4)BYRD Thomas
5)KELLY Bryan Talmadge
6)LARSON Christopher

(57) Abstract :
The invention relates to a method for non invasive reproducible determination of a corrected surface on a 3D bone surface model constructed from 3D medical image of a bone having a deformation consisting in a bump overgrowth at the head neck junction; wherein said corrected surface comprises: i) a 3D spherical corrected surface patch on the head portion of said 3D bone surface model and ii) a 3D smooth transition corrected surface patch on the neck portion of said 3D bone surface model contiguous to said 3D spherical corrected surface patch; Said corrected surface patches are defined by a set of parameters comprising: iii) at least one first parameter (a) representing a spherical extent value of said 3D spherical corrected surface patch iv) and a set of at least one second parameter said set determining the 3D correction boundary of said corrected surface patches such that said corrected surface patches are continuous with said 3D bone surface model along said boundary.

No. of Pages : 47 No. of Claims : 23

(12) PATENT APPLICATION PUBLICATION
(19) INDIA
(22) Date of filing of Application :28/12/2012
(21) Application No.11338/DELNP/2012 A
(43) Publication Date : 05/09/2014

(54) Title of the invention : FEEDER APPARATUS

(51) International classification :F27D3/08,F27D19/00
(31) Priority Document No :2010903230
(32) Priority Date :20/07/2010
(33) Name of priority country :Australia
(86) International Application No :PCT/AU2011/000927
Filing Date :20/07/2011
(87) International Publication No :WO 2012/009763
(61) Patent of Addition to Application Number :NA
Filing Date :NA
(62) Divisional to Application Number :NA
Filing Date :NA

(71)**Name of Applicant :**
1)XSTRATA TECHNOLOGY PTY LTD
Address of Applicant :Level 4 307 Queen Street Brisbane Queensland 4000 Australia
(72)**Name of Inventor :**
1)LETCHFORD Frank Arthur Samuel
2)BOUCHER William David
3)JOUBERT Hugo

(57) Abstract :
A feeder apparatus for a furnace comprising a vessel for feed material said vessel being positioned at least partially above a feed port of the furnace and feeding means located at least partially within the vessel said feeding means being adapted to control the rate of feed flow from the vessel through the feed port and into the furnace said apparatus preventing escape of fugitive gases between an exterior of the vessel and the feed port.

No. of Pages : 20 No. of Claims : 18

(12) PATENT APPLICATION PUBLICATION
(21) Application No.11339/DELNP/2012 A
(19) INDIA
(22) Date of filing of Application :28/12/2012
(43) Publication Date : 05/09/2014

(54) Title of the invention : ELECTRICAL REACTOR WITH MAGNETIZATION

(51) International classification :H01F29/14,H01F27/26
(31) Priority Document No :2010122442
(32) Priority Date :02/06/2010
(33) Name of priority country :Russia
(86) International Application No :PCT/RU2010/000819
Filing Date :18/02/2011
(87) International Publication No :WO 2011/152753
(61) Patent of Addition to Application Number :NA
Filing Date :NA
(62) Divisional to Application Number :NA
Filing Date :NA

(71)**Name of Applicant :**
1)CIADOR ENTERPRISES LIMITED
Address of Applicant :P.C. 3025 Nafpliou 15 2nd floor Limassol Cyprus
(72)**Name of Inventor :**
1)BRYANTSEV Alexander Mikhailovich

(57) Abstract :
THE INVENTION RELATES TO ELECTRICAL ENGINEERING AND CAN BE USED IN REACTORS CONTROLLED BY MAGNETIZATION WHICH ARE INSTALLED, FOR EXAMPLE, IN AN ELECTRICAL CIRCUIT FOR REACTIVE POWER COMPENSATION, FOR VOLTAGE STABILIZATION, FOR PARALLEL OPERATION WITH CAPACITOR BATTERIES, FOR INCREASING THE TRANSMISSION CAPACITY ETC. THE TECHNICAL RESULT CONSISTS IN DECREASING THE CONSUMPTION OF ELECTRICAL STEEL, AND REDUCING THE COSTS AND LABOUR INTENSIVENESS IN MANUFACTURE. THE REACTOR COMPRISES A MAGNETIC SYSTEM CONSISTING OF VERTICAL BARS, HORIZONTAL YOKES, MAGNETIC SHUNTS AS WELL AS WINDINGS ARRANGED ON EACH BAR AND WINDINGS SURROUNDING TWO NEIGHBOURING BARS, AS WELL AS A CONTROLLABLE DC VOLTAGE SOURCE. THE THREE-DIMENSIONAL MAGNETIC SYSTEM CONSISTS OF TWO THREE-PHASE MAGNETIC CIRCUITS ARRANGED IN PARALLEL PLANES. ADDITIONAL PORTIONS OF THE YOKES IN THE FORM OF FERROMAGNETIC INSERTS WHICH CONNECT THE MAGNETIC CIRCUITS TO ONE ANOTHER ALONG THE HORIZONTAL YOKES ARE INSTALLED BETWEEN THE MAGNETIC CIRCUITS. THE STEEL SECTION OF THE FERROMAGNETIC INSERTS SBCT. AND OF THE BARS SCT. ARE ASSOCIATED BY THE RATIO 0.8<(SBCT.:SCT.)<1.2.

No. of Pages : 13 No. of Claims : 1

(12) PATENT APPLICATION PUBLICATION
(21) Application No.1571/DEL/2012 A
(19) INDIA
(22) Date of filing of Application :22/05/2012
(43) Publication Date : 05/09/2014

(54) Title of the invention : A MICROCONTROLLER BASED DIGITAL DRIVER FOR C-BAND ROTARY FIELD FERRITE PHASE SHIFTER

(51) International classification :G01S
(31) Priority Document No :NA
(32) Priority Date :NA
(33) Name of priority country :NA
(86) International Application No :NA
Filing Date :NA
(87) International Publication No : NA
(61) Patent of Addition to Application Number :NA
Filing Date :NA
(62) Divisional to Application Number :NA
Filing Date :NA

(71)**Name of Applicant :**
1)DIRECTOR GENERAL DEFENCE RESEARCH & DEVELOPMENT ORGANISATION
Address of Applicant :Ministry of Defence Govt of India Directorate of Extramural Resarch & Intellectual Property Rights (ER&IPR) Room No 348 B-Wing DRDO Bhawan Rajaji Marg New Delhi 110011 India
(72)**Name of Inventor :**
1)Balwinder Singh Matheru
2)Meenakshi Aggarwal
3)Raj Kumar Gautam

(57) Abstract :
A microcontroller based digital driver (MDD) for C-Band rotary field ferrite phase shifter is used to translate the 6-bit digital commands received from the beam steering computer into appropriate current and voltage waveforms for setting the rotary field phase shifters present in a phased array radar to the desired phase state. The microcontroller unit and micro-stepping device assembled in an open loop configuration for generation of control current for the rotary field phase shifter coils. This invention has immense utility in stepper motor based electronic control circuits for industrial and automotive applications as it provides increased step accuracy and reduced power dissipation.

No. of Pages : 19 No. of Claims : 13

(12) PATENT APPLICATION PUBLICATION
(19) INDIA
(22) Date of filing of Application :03/01/2013
(21) Application No.68/DELNP/2013 A
(43) Publication Date : 05/09/2014

(54) Title of the invention : A WIND TURBINE BLADE

(51) International classification :F03D1/06
(31) Priority Document No :1011539.2
(32) Priority Date :08/07/2010
(33) Name of priority country :U.K.
(86) International Application No :PCT/GB2011/001035
Filing Date :08/07/2011
(87) International Publication No :WO 2012/004571
(61) Patent of Addition to Application Number :NA
Filing Date :NA
(62) Divisional to Application Number :NA
Filing Date :NA

(71)**Name of Applicant :**
1)BLADE DYNAMICS LIMITED
Address of Applicant :Saunders Drive Cowes Isle of Wight PO31 8HU U.K.
(72)**Name of Inventor :**
1)HAYDEN Paul
2)BEHMER Harald

(57) Abstract :
A wind turbine blade comprising an aerodynamic fairing supported along at least a portion of its axial length by a spar (12). The spar comprises at least two spar segments (12) joined end to end at an interface (9) each spar segment comprising a shear web (3) with a spar cap (4) on each side. The outer face (6) of each spar cap tapers inwardly towards the interface such that its depth is reduced towards the interface creating a recess on each side of the interface formed by the tapered faces of adjacent spar caps. A respective connection piece (8) is sized to fit into each recess. Each connection piece (8) is sized to fit into each recess. Each connection piece (8) being fixed to the tapered faces of adjacent spar caps to form a double scarf joint.

No. of Pages : 28 No. of Claims : 15

(12) PATENT APPLICATION PUBLICATION
(19) INDIA
(22) Date of filing of Application :05/12/2012
(21) Application No.10574/DELNP/2012 A
(43) Publication Date : 05/09/2014

(54) Title of the invention : VALVE ARRANGEMENT FOR A SCROLL REFRIGERATION COMPRESSOR

(51) International classification :F04C29/12,F04C28/16
(31) Priority Document No :10/54287
(32) Priority Date :02/06/2010
(33) Name of priority country :France
(86) International Application No :PCT/FR2011/051084
Filing Date :16/05/2011
(87) International Publication No :WO 2011/151553
(61) Patent of Addition to Application Number :NA
Filing Date :NA
(62) Divisional to Application Number :NA
Filing Date :NA

(71)**Name of Applicant :**
1)DANFOSS COMMERCIAL COMPRESSORS
Address of Applicant :Route Dpartementale 28 ZI Lieudit Les Communaux Reyrieux F 01600 Trevoux France
(72)**Name of Inventor :**
1)GINIES Pierre
2)ANCEL Christophe

(57) Abstract :
The invention relates to a valve arrangement comprising: a valve plate (26) including (i) a delivery port (27) intended to allow the flow of fluid from a delivery line provided in a volute of the compressor and (ii) a valve seat (28) provided on a first face of the valve plate; a delivery valve (29) which can move between a delivery port (27) closing position and a port opening position; and retaining means (30) arranged to limit the range of movement of the delivery valve (29). The arrangement also comprises: at least one bypass valve (39) disposed adjacent to a second face of the valve plate (26) said bypass valve (39) being able to move between a position comprising the closing of a bypass channel (34) provided in the plate of the volute and a position comprising the opening of said bypass channel; and retaining means disposed on the second face of the valve plate (26) and arranged to limit the range of movement of the bypass valve.

No. of Pages : 22 No. of Claims : 10

(12) PATENT APPLICATION PUBLICATION
(19) INDIA
(22) Date of filing of Application :05/12/2012
(21) Application No.10575/DELNP/2012 A
(43) Publication Date : 05/09/2014

(54) Title of the invention : DIAGNOSTIC SCREENING AND THERAPEUTIC APPLICATIONS OF OCAB BASED TOOLS

(51) International classification :A61K38/17,A61P3/00,A61P3/08
(31) Priority Document No :61/350210
(32) Priority Date :01/06/2010
(33) Name of priority country :U.S.A.
(86) International Application No :PCT/CA2011/050327
Filing Date :31/05/2011
(87) International Publication No :WO 2011/150516
(61) Patent of Addition to Application Number :NA
Filing Date :NA
(62) Divisional to Application Number :NA
Filing Date :NA

(71)**Name of Applicant :**
1)UNIVERSIT‰ LAVAL
Address of Applicant :Cit Universitaire Qubec Qubec G1V 0A6 Canada
(72)**Name of Inventor :**
1)PICARD Frdric
2)MIARD Stphanie
3)CARTER Sophie
4)BOIVIN Louise
5)RONDEAU Evelyne
6)ROY BELLAVANCE Catherine

(57) Abstract :
It is shown herein that the expression of the OcaB protein is modulated in adipocytes during adipogenesis the development of insulin resistance the glucose intolerance and ageing. The application thus provides methods of characterizing an individual susceptibility to develop adipogenesis insulin resistance and/or glucose intolerance methods of diagnosing insulin resistance and/or glucose intolerance methods of characterizing the effectiveness of an agent in the treatment prevention or alleviation of symptoms of adipogenesis insulin resistance and/or glucose intolerance screening assays to identify agents useful in the treatment prevention or alleviation of symptoms of adipogenesis insulin resistance and/or glucose intolerance based on the assessment of a parameter of an OcaB based reagent.

No. of Pages : 80 No. of Claims : 60

(12) PATENT APPLICATION PUBLICATION
(19) INDIA
(22) Date of filing of Application :04/01/2013

(21) Application No.114/DELNP/2013 A
(43) Publication Date : 05/09/2014

(54) Title of the invention : USES AND COMPOSITIONS

(51) International classification :C10L1/19,C10L10/08,C10M129/76
(31) Priority Document No :10251150.8
(32) Priority Date :25/06/2010
(33) Name of priority country :EPO
(86) International Application No :PCT/GB2011/000934
Filing Date :21/06/2011
(87) International Publication No :WO 2011/161406
(61) Patent of Addition to Application Number :NA
Filing Date :NA
(62) Divisional to Application Number :NA
Filing Date :NA

(71)**Name of Applicant :**
1)CASTROL LIMITED
Address of Applicant :Wakefield House Pipers Way Swindon Wiltshire SN3 1RE U.K.
(72)**Name of Inventor :**
1)ADAMS Ieuan Stephen
2)ALI Rana
3)DAVIES John Philip
4)WEST Kevin Richard

(57) Abstract :
The use of an oil soluble mono di or tri glyceride of at least one hydroxy polycarboxylic acid or a derivative thereof as an anti wear additive and/or friction modifier in a non¬ aqueous lubricant composition and/or in a fuel composition. Also a non aqueous lubricant composition and a fuel composition for an internal combustion engine which comprise at least one additive which is an oil soluble mono di or tri glyceride of at least one hydroxy polycarboxylic acid or a derivative thereof.

No. of Pages : 51 No. of Claims : 18

(12) PATENT APPLICATION PUBLICATION
(19) INDIA
(22) Date of filing of Application :02/01/2013
(21) Application No.41/DELNP/2013 A
(43) Publication Date : 05/09/2014

(54) Title of the invention : FUSION PROTEIN HAVING FACTOR VII ACTIVITY

(51) International classification :C07K19/00,C12N15/62,C12N15/63
(31) Priority Document No :1020100052719
(32) Priority Date :04/06/2010
(33) Name of priority country:Republic of Korea
(86) International Application No :PCT/KR2011/004131
Filing Date :07/06/2011
(87) International Publication No :WO 2011/152694
(61) Patent of Addition to Application Number :NA
Filing Date :NA
(62) Divisional to Application Number :NA
Filing Date :NA

(71)**Name of Applicant :**
1)SK CHEMICALS CO. LTD.
Address of Applicant :686 Sampyeong dong Bundang gu Seongnam si Gyeonggi do 463 400 Republic of Korea
(72)**Name of Inventor :**
1)SONG In Young
2)KIM Hun Taek
3)LEE Bong Yong
4)PARK Mahn Hoon
5)LEE Ho Soon
6)LIM Yun Jung
7)LEE Ji Hye
8)SON Seo Yeon
9)KIM Min Sun

(57) Abstract :
A fusion protein comprising factor VII (FVII) and transferrin according to the present invention has an improved specific activity of FVII compared to existing FVII fusion proteins comprising other fusion partners than transferrin and thus can be effectively used in a therapy using FVII.

No. of Pages : 76 No. of Claims : 20

(12) PATENT APPLICATION PUBLICATION
(19) INDIA
(22) Date of filing of Application :03/01/2013
(21) Application No.74/DELNP/2013 A
(43) Publication Date : 05/09/2014

(54) Title of the invention : DRY POWDER INHALER

(51) International classification :A61M15/00
(31) Priority Document No :1055546
(32) Priority Date :07/07/2010
(33) Name of priority country :France
(86) International Application No :PCT/FR2011/051594
Filing Date :05/07/2011
(87) International Publication No :WO 2012/004523
(61) Patent of Addition to Application Number :NA
Filing Date :NA
(62) Divisional to Application Number :NA
Filing Date :NA

(71)**Name of Applicant :**
1)APTAR FRANCE SAS
Address of Applicant :Lieudit le Prieur F 27110 Le Neubourg France
(72)**Name of Inventor :**
1)BAILLET Matthieu
2)COLOMB Arnaud
3)SALLAK Zakaria

(57) Abstract :
Dry powder inhaler (100; 200), having a body (110; 210) containing a dispersion chamber (111; 2 11), a dispensing orifice (13 1; 23 1) through which the user inhales, a loading opening (121 ; 220) receiving a capsule (10) containing a dose of dry powder to be inhaled, and at least one movable part (130; 260) that can move with respect to said body between a first end position and a second end position, said dispersion chamber (111; 2 11) containing at least one part (11, 12) of an empty capsule at the moment of inhalation, said at least one capsule part swirling within said dispersion chamber during the inhalation in order to disperse and/or deagglomerate the powder.

No. of Pages : 27 No. of Claims : 4

(12) PATENT APPLICATION PUBLICATION
(21) Application No.27/DELNP/2013 A
(19) INDIA
(22) Date of filing of Application :02/01/2013
(43) Publication Date : 05/09/2014

(54) Title of the invention : SWITCH UNIT WITH ARC EXTINGUISHING UNITS

(51) International classification :H01H9/34,H01H77/10
(31) Priority Document No :10165139.6
(32) Priority Date :07/06/2010
(33) Name of priority country :EPO
(86) International Application No :PCT/EP2011/059338
Filing Date :07/06/2011
(87) International Publication No :WO 2011/154380
(61) Patent of Addition to Application Number :NA
Filing Date :NA
(62) Divisional to Application Number :NA
Filing Date :NA

(71)**Name of Applicant :**
1)Eaton Electrical IP GmbH & Co. KG
Address of Applicant :Airport Center Schnefeld Mittelstrasse 5 5a 12529 Schnefeld Germany
(72)**Name of Inventor :**
1)LANG Volker
2)FRIEDRICHSEN Lutz

(57) Abstract :
The invention relates to a switch (1) suitable for DC applications comprising two fixed conductive contacts (2) with first contact areas (21 22) a movable conductive bridge (3) with two second contact areas (31 32) for being connected to the two first contact areas (21 22) in the on status and for being disconnected from the two the first contact areas (21 22) in the off status and two arc extinguishing units (41 42) to extinguish electric arcs (51 52) occurring between the first and second contact areas (21 22 31 32) after disconnecting the second contact areas (31 32) from the first contact areas (21 22) wherein first conductive arc guiding elements (61) extend from each first contact area (21 22) into the corresponding arc extinguishing unit (41 42) and at least one second conductive arc guiding element (62) extends into the arc extinguishing units (41 42) suitably shaped to guide the electric arcs (51 52) from each of the second contact areas (31 32) of the movable bridge (3) into the arc extinguishing units (41 42) wherein at least two permanent magnets (71 72) are suitably arranged adjacent to the first and second contact areas (21 22 31 32) to provide a magnetic field (B) suitable to support the guiding of the electric arc (51 52) into the arc extinguishing units (41 42) wherein at least parts (621 622) of the second arc guiding element (62) are made of a magnetic permeable material which are connected to the permanent magnets (71 72) as a back iron for the permanent magnets (71 72) to increase the strength of the magnetic field (B) between the permanent magnets (71 72).

No. of Pages : 22 No. of Claims : 15

(12) PATENT APPLICATION PUBLICATION
(19) INDIA
(22) Date of filing of Application :03/01/2013
(21) Application No.75/DELNP/2013 A
(43) Publication Date : 05/09/2014

(54) Title of the invention : METHOD FOR USING A DRY POWDER INHALER

(51) International classification :A61M15/00
(31) Priority Document No :1055543
(32) Priority Date :07/07/2010
(33) Name of priority country :France
(86) International Application No :PCT/FR2011/051590
Filing Date :05/07/2011
(87) International Publication No :WO 2012/004520
(61) Patent of Addition to Application Number :NA
Filing Date :NA
(62) Divisional to Application Number :NA
Filing Date :NA

(71)**Name of Applicant :**
1)APTAR FRANCE SAS
Address of Applicant :Lieudit le Prieur F 27110 Le Neubourg France
(72)**Name of Inventor :**
1)BAILLET Matthieu
2)COLOMB Arnaud
3)SALLAK Zakaria

(57) Abstract :
Method for using a dry powder inhaler, said method comprising the foliowing steps: supplying a dry powder inhaler (100; 200) having a body (110; 210) containing a dispersion chamber (111; 2 11), a dispensing orifice (131 ; 23 1) through which the user inhales, a loading opening (121; 220) receiving a capsule (10) containing a dose of dry powder to be inhaled, and at least one movable part (130; 260) that can move with respect to said body between a first end position and a second end position, inserting a full capsule (10) into said loading opening (121 ; 220), moving said movable part from one of the end positions thereof to the other end position in order to open said capsule and empty the powder contained therein into said dispersion chamber, inhaling said powder through said dispensing orifice, and returning said movable part to its initial position in order to open said dispersion chamber and remove the empty capsule from said dispersion chamber.

No. of Pages : 32 No. of Claims : 15

(12) PATENT APPLICATION PUBLICATION
(19) INDIA
(22) Date of filing of Application :28/12/2012
(21) Application No.11369/DELNP/2012 A
(43) Publication Date : 05/09/2014

(54) Title of the invention : A NEW METHOD OF USING N THIO COMPOUNDS FOR OLIGONUCLEOTIDE SYNTHESIS

(51) International classification :C07H1/00,C07H21/00
(31) Priority Document No :61/360324
(32) Priority Date :30/06/2010
(33) Name of priority country :U.S.A.
(86) International Application No :PCT/EP2011/061057
Filing Date :30/06/2011
(87) International Publication No :WO 2012/001126
(61) Patent of Addition to Application Number :NA
Filing Date :NA
(62) Divisional to Application Number :NA
Filing Date :NA

(71)**Name of Applicant :**
1)GIRINDUS AMERICA INC.
Address of Applicant :8560 Reading Road Cincinnati Ohio 45215 U.S.A.
(72)**Name of Inventor :**
1)HE Yigang
2)SOROKIN Victor
3)MAZUR Wieslaw Adam

(57) Abstract :
A method for synthesizing an oligonucleotide which comprises using a sulfurizing agent of general formula (I) for sulfurizing at least one phosphorus internucleotide linkage of a precursor of the oligonucleotide wherein R is an aryl group or a heteroaryl group which is bonded to the S atom through an annular carbon atom; and R and R are independently organic residues preferably a C1 C20 hydrocarbon residue. The method may further comprise purifying the oligonucleotide. Also included is a process for the synthesis of the sulfurizing agent.

No. of Pages : 25 No. of Claims : 25

(12) PATENT APPLICATION PUBLICATION
(19) INDIA
(22) Date of filing of Application :01/01/2013
(21) Application No.15/DELNP/2013 A
(43) Publication Date : 05/09/2014

(54) Title of the invention : DISSOLVABLE FIBROUS WEB STRUCTURE ARTICLE COMPRISING ACTIVE AGENTS

(51) International classification :A61K8/02,A61K9/00,A61K45/00
(31) Priority Document No :61/360982
(32) Priority Date :02/07/2010
(33) Name of priority country :U.S.A.
(86) International Application No :PCT/US2011/042640
Filing Date :30/06/2011
(87) International Publication No :WO 2012/003349
(61) Patent of Addition to Application Number :NA
Filing Date :NA
(62) Divisional to Application Number :NA
Filing Date :NA

(71)**Name of Applicant :**
1)THE PROCTER & GAMBLE COMPANY
Address of Applicant :One Procter & Gamble Plaza Cincinnati Ohio 45202 U.S.A.
(72)**Name of Inventor :**
1)GLENN Robert Wayne Jr.
2)CHHABRA Rajeev
3)ALLEN Jr. William Maxwell
4)BRENNAN Jonathan Paul

(57) Abstract :
The personal care compositions of the present invention are in the form of an Article comprising a dissolvable fibrous web structure. The fibers of the dissolvable fibrous web structure comprise a surfactant; a water soluble polymeric structurant; and a plasticizer. Additionally the ratio of the water soluble water soluble polymeric structurant to the active agent in the fiber is 3.5 or less.

No. of Pages : 57 No. of Claims : 15

(12) PATENT APPLICATION PUBLICATION
(19) INDIA
(22) Date of filing of Application :02/01/2013
(21) Application No.50/DELNP/2013 A
(43) Publication Date : 05/09/2014

(54) Title of the invention : PRODUCTION CELL LINE

(51) International classification :C12P21/02,C12N15/67,C12N1/15
(31) Priority Document No :10168446.2
(32) Priority Date :05/07/2010
(33) Name of priority country :EPO
(86) International Application No :PCT/EP2011/061241
Filing Date :04/07/2011
(87) International Publication No :WO 2012/004226
(61) Patent of Addition to Application Number :NA
Filing Date :NA
(62) Divisional to Application Number :NA
Filing Date :NA

(71)**Name of Applicant :**
1)Universitt f¼r Bodenkultur Wien
Address of Applicant :Gregor Mendel Strae 33 A 1180 Vienna Austria
(72)**Name of Inventor :**
1)MATTANOVICH Diethard
2)DRAGOSITS Martin
3)GASSER Brigitte
4)MAURER Michael
5)SAUER Michael

(57) Abstract :
The invention refers to a method of producing a recombinant polypeptide of interest (POI) in a cell culture comprising genetically engineering a eukaryotic cell line to specifically cause prolongation of the G2+M cell cycle phase in a pre culture phase and to produce the POI in a producing phase following the pre culture phase a high producer cell line and cell culture as well as a method of increasing the yield of a recombinant POI production in a cell culture.

No. of Pages : 37 No. of Claims : 14

(12) PATENT APPLICATION PUBLICATION
(21) Application No.596/DEL/2013 A
(19) INDIA
(22) Date of filing of Application :01/03/2013
(43) Publication Date : 05/09/2014

(54) Title of the invention : AN IMPROVED COKE BASED ENERGY EFFICIENT NON-FERROUS MELTING FURNACE

(51) International classification :C22B
(31) Priority Document No :NA
(32) Priority Date :NA
(33) Name of priority country :NA
(86) International Application No :NA
Filing Date :NA
(87) International Publication No : NA
(61) Patent of Addition to Application Number :NA
Filing Date :NA
(62) Divisional to Application Number :NA
Filing Date :NA

(71)**Name of Applicant :**
1)COUNCIL OF SCIENTIFIC & INDUSTRIAL RESEARCH
Address of Applicant :ANUSANDHAN BHAWAN, RAFI MARG, NEW DELHI-110001, INDIA Delhi India
(72)**Name of Inventor :**
1)KANCHAN KUMAR PAUL
2)DURBADAL MANDAL
3)PALASH PODDAR
4)KANAI LALA SAHOO

(57) Abstract :
The energy efficient melting furnace of the present invention provides an environmental friendly furnace which utilizes the heat content of the flue gasses to preheat the incoming air for fuel combustion. The combustion air is pre-heated in a rectangular / oblong shaped pre- heater for better heat transfer. The suspended particulate matters, zinc vapour and other volatile matters, which come out during melting in the flue gasses are reduced to a considerable extent in the pre-heating chamber so that the users do not have direct exposure to the toxic flue. Thus, it will be extremely helpful in brass melting.

No. of Pages : 19 No. of Claims : 10

(12) PATENT APPLICATION PUBLICATION
(19) INDIA
(22) Date of filing of Application :03/01/2013
(21) Application No.76/DELNP/2013 A
(43) Publication Date : 05/09/2014

(54) Title of the invention : DRY POWDER INHALER

(51) International classification :A61M15/00
(31) Priority Document No :1055528
(32) Priority Date :07/07/2010
(33) Name of priority country :France
(86) International Application No :PCT/FR2011/051579
Filing Date :05/07/2011
(87) International Publication No :WO 2012/004512
(61) Patent of Addition to Application Number :NA
Filing Date :NA
(62) Divisional to Application Number :NA
Filing Date :NA

(71)**Name of Applicant :**
1)APTAR FRANCE SAS
Address of Applicant :Lieudit le Prieur F 27110 Le Neubourg France
(72)**Name of Inventor :**
1)COLOMB Arnaud
2)SALLAK Zakaria

(57) Abstract :
The invention relates to a dry-powder inhaler (100) comprising a body (110) containing a dispersion chamber (111), and a lid (130) mounted on the body such that it can pivot between a closed position and an open position, said lid including a dispensing opening (131) through which the user inhales. The inhaler also comprises a loading opening (121) which can receive a capsule (10) containing a dose of dry powder to be inhaled, said capsule (10) comprising a top portion (11), and a bottom portion (12) which can be separated from the top portion. The above-mentioned loading opemng (121) comprises at least one clamping rib (125) for clampingly holding the top portion (11) of the capsule (10) inserted into the loading opening (121) before and during the opening of said capsule (10). The lid (130) comprises a lug (135) which, when the lid (130) is completely closed, engages with the top portion (11) of the capsule that is clampingly held in the loading opening (121), in order to push same into the dispersion chamber (111) of the inhaler.

No. of Pages : 19 No. of Claims : 3

(12) PATENT APPLICATION PUBLICATION
(19) INDIA
(22) Date of filing of Application :04/01/2013
(21) Application No.133/DELNP/2013 A
(43) Publication Date : 05/09/2014

(54) Title of the invention : CAPACITIVE TOUCH INTERFACE ASSEMBLY

(51) International classification :G06F1/16,G06F3/044
(31) Priority Document No :12/807801
(32) Priority Date :14/09/2010
(33) Name of priority country :U.S.A.
(86) International Application No :PCT/US2011/046899
Filing Date :08/08/2011
(87) International Publication No :WO 2012/036804
(61) Patent of Addition to Application Number :NA
Filing Date :NA
(62) Divisional to Application Number :NA
Filing Date :NA

(71)**Name of Applicant :**
1)ROSEMOUNT INC.
Address of Applicant :12001 Technology Drive Eden Prairie Minnesota 55344 3695 U.S.A.
(72)**Name of Inventor :**
1)SCHWARTZ Daniel Ronald
2)MCCOY Steven John
3)RUD Jason Harold

(57) Abstract :
A display assembly includes a transparent cover piece (62) a display shroud (48; 248) having a contact structure (74; 274) arranged to face the transparent cover piece (62) an interface subassembly (32; 232) mounted on the display shroud (48; 248) an electronics board shroud (44) having a support member (82) and a connection feature (84) and a biasing member (46) operably engaged between the display shroud (48; 248) and the electronics board shroud (44). The connection feature (84) mechanically connects the electronics board shroud (44) to the display shroud (48; 248) while permitting axial displacement and rotation therebetween. The biasing member (46) rests on the support member (82) of the electronics board shroud (44) and the biasing member (46) is configured to urge the contact structure (74; 274) of the display shroud (48; 248) into physical contact with the transparent cover piece (62). The interface subassembly (32; 232) includes a display circuit (36) for providing a digital display and a touch circuit (34) for providing touch actuation at or near the digital display through the transparent cover piece (62).

No. of Pages : 30 No. of Claims : 33

(12) PATENT APPLICATION PUBLICATION
(19) INDIA
(22) Date of filing of Application :01/01/2013
(21) Application No.24/DELNP/2013 A
(43) Publication Date : 05/09/2014

(54) Title of the invention : SAFETY MODULE FOR AN ENGINE CONTROL SYSTEM

(51) International classification :F02D41/22,F02D41/26,B63H21/22
(31) Priority Document No :61/369653
(32) Priority Date :30/07/2010
(33) Name of priority country :U.S.A.
(86) International Application No :PCT/US2011/045914
Filing Date :29/07/2011
(87) International Publication No :WO 2012/016155
(61) Patent of Addition to Application Number :NA
Filing Date :NA
(62) Divisional to Application Number :NA
Filing Date :NA

(71)**Name of Applicant :**
1)GENERAL ELECTRIC COMPANY
Address of Applicant :1 River Road Schenectady NY 12345 U.S.A.
(72)**Name of Inventor :**
1)STENDER Gregory Parker

(57) Abstract :
A safety and input/output (I/O) module (106) of an engine controller (101) for an engine set of a marine vessel can be physically distinct from an engine control unit (ECU) (102). The safety and I/O module can include hardware in addition to software firmware or a combination thereof. The safety and I/O module can be a single logic controller having safety functionality and I/O functionality. The safety functionality can be for dynamic engine protection during operation of the engine set of the marine vessel. The I/O functionality can be for sending signals to components external to the engine controller and for receiving signals from components (120 122) external to the engine controller.

No. of Pages : 45 No. of Claims : 24

(12) PATENT APPLICATION PUBLICATION
(21) Application No.52/DELNP/2013 A
(19) INDIA
(22) Date of filing of Application :02/01/2013
(43) Publication Date : 05/09/2014

(54) Title of the invention : MULTI BIT HARQ ACK AND RANK INDICATOR TRANSMISSION ON PHYSICAL UPLINK SHARED CHANNEL WITH SINGLE USER MULTIPLE INPUT MULTIPLE OUTPUT OPERATION

(51) International classification :H04L1/06,H04L1/16,H04L5/00
(31) Priority Document No :61/398588
(32) Priority Date :28/06/2010
(33) Name of priority country :U.S.A.
(86) International Application No :PCT/EP2011/060411
Filing Date :22/06/2011
(87) International Publication No :WO 2012/000857
(61) Patent of Addition to Application Number :NA
Filing Date :NA
(62) Divisional to Application Number :NA
Filing Date :NA

(71)**Name of Applicant :**
1)NOKIA SIEMENS NETWORKS OY
Address of Applicant :Karaportti 3 FI 02610 Espoo Finland
(72)**Name of Inventor :**
1)HOOLI Kari Juhani
2)TIIROLA Esa Tapani
3)LUNTTILA Timo Erkki
4)PAJUKOSKI Kari Pekka

(57) Abstract :
In accordance with an exemplary embodiment of the invention there is at least a method computer program instructions and an apparatus to perform operations including replicating and time aligning at a wireless communication device more than two hybrid automatic repeat request acknowledgment or rank indicator bits across layers and codewords of an uplink transmission signal and providing an ability to define per codeword either an effective modulation order or a coding rate when a different modulation order is configured to the codewords so that time alignment across all the layers and the codewords of the uplink transmission signal is maintained. Further in accordance with the embodiments there is receiving an uplink transmission signal comprising more than two hybrid automatic repeat request acknowledgment or rank indicator bits across layers and codewords of the uplink transmission signal and demodulating the uplink transmission signal where either an effective modulation order or a coding rate per codeword is modified so that time alignment across all the layers and the codewords of the uplink transmission signal is maintained.

No. of Pages : 50 No. of Claims : 30

(12) PATENT APPLICATION PUBLICATION
(19) INDIA
(22) Date of filing of Application :03/01/2013
(21) Application No.89/DELNP/2013 A
(43) Publication Date : 05/09/2014

(54) Title of the invention : DESALINATION SYSTEM

(51) International classification :C02F1/44,F01K3/08,F22B1/00
(31) Priority Document No :1010394.3
(32) Priority Date :22/06/2010
(33) Name of priority country :U.K.
(86) International Application No :PCT/GB2011/051123
Filing Date :16/06/2011
(87) International Publication No :WO 2011/161432
(61) Patent of Addition to Application Number :NA
Filing Date :NA
(62) Divisional to Application Number :NA
Filing Date :NA

(71)**Name of Applicant :**
1)ASTON UNIVERSITY
Address of Applicant :Aston Triangle Birmingham West Midlands B4 7ET U.K.
(72)**Name of Inventor :**
1)DAVIES Philip

(57) Abstract :
A desalination system including a power piston slidably mounted in a power cylinder a water pump for supplying pressurised water to a reverse osmosis unit the water pump including a pump piston slideably mounted in a pump cylinder thereby defining a pump volume and a coupling mechanism coupling the power piston to the pump piston the coupling mechanism providing a relatively low mechanical advantage when the pump volume is relatively large and a relatively high mechanical advantage when the pump volume is relatively small.

No. of Pages : 22 No. of Claims : 15

(12) PATENT APPLICATION PUBLICATION
(19) INDIA
(22) Date of filing of Application :04/01/2013
(21) Application No.131/DELNP/2013 A
(43) Publication Date : 05/09/2014

(54) Title of the invention : METHODS AND APPARATUS FOR PROVIDING A TOTE DELIVERY OPTION

(51) International classification :G06Q30/00
(31) Priority Document No :12/825226
(32) Priority Date :28/06/2010
(33) Name of priority country :U.S.A.
(86) International Application No :PCT/US2011/042042
Filing Date :27/06/2011
(87) International Publication No :WO 2012/006031
(61) Patent of Addition to Application Number :NA
Filing Date :NA
(62) Divisional to Application Number :NA
Filing Date :NA

(71)**Name of Applicant :**
1)AMAZON TECHNOLOGIES INC.
Address of Applicant :P.O. Box 8102 Reno Nevada 89507 U.S.A.
(72)**Name of Inventor :**
1)DEARLOVE Janice Vivienne
2)VUILLEMOT Ward W.
3)WILKE Jeffrey A.
4)HERRINGTON Douglas J.

(57) Abstract :
A tote delivery service may provide a user interface may provide multiple shipping options including a tote delivery option to customers when ordering items offered by a network site. The tote delivery option delivers items to the customers in reusable totes on tote delivery days. The totes are delivered to delivery addresses on tote delivery days and picked up from the delivery addresses on subsequent tote delivery days. Customers may place items into totes to be returned to the facility. Information including tote delivery data may be analyzed to determine recommendations that may be sent to particular customers via one or more communications channels. A tote management interface may provide virtual totes via which customers may manage their upcoming tote deliveries to one or more addresses. Tote delivery data may be processed to generate bulk transfer data for fulfillment centers and zone delivery data for sortation nodes.

No. of Pages : 86 No. of Claims : 15

(12) PATENT APPLICATION PUBLICATION
(21) Application No.1461/DEL/2012 A
(19) INDIA
(22) Date of filing of Application :11/05/2012
(43) Publication Date : 05/09/2014

(54) Title of the invention : Bidding platform for heavily discounted unused products where bids can be made absolutely free of charge as incentive for participating in interactive internet based advertisements

(51) International classification :G06Q
(31) Priority Document No :NA
(32) Priority Date :NA
(33) Name of priority country :NA
(86) International Application No :NA
Filing Date :NA
(87) International Publication No : NA
(61) Patent of Addition to Application Number :NA
Filing Date :NA
(62) Divisional to Application Number :NA
Filing Date :NA

(71)**Name of Applicant :**
1)AEMELIOR ASSOCIATES PRIVATE LIMITED
Address of Applicant :Aemelior Associates Private Limited House No. 241A Second Floor Block HR Gully #6 Pulprahladpur New Delhi-110044 India
(72)**Name of Inventor :**
1)GITA TRIVEDI

(57) Abstract :
The Invention herein relate to internet auctions and internet advertisements and, more particularly, to offering free bidding platform to users based on their performance in interactive internet based advertisements associated with the platform. In this system, the end user is exposed to brand games, which are interactive brand promotions, which require the end users to use their knowledge of the brand and/or its products to be completed successfully. The brand games could be displayed as web based advertisements or could be displayed as associated follow-up interactions along with other brand promotional messages. If the user completes the brand game, he may get access to the bidding platform for free of cost or for a lesser price. Further the user can bid for the selected product and can win the selected product if he wins the auction based on pre-set and pre-disclosed criteria.

No. of Pages : 46 No. of Claims : 22

(12) PATENT APPLICATION PUBLICATION
(19) INDIA
(22) Date of filing of Application :03/01/2013
(21) Application No.84/DELNP/2013 A
(43) Publication Date : 05/09/2014

(54) Title of the invention : COMPOSITIONS AND METHODS FOR THE TREATMENT OF ADDICTION PSYCHIATRIC DISORDERS AND NEURODEGENERATIVE DISEASE

(51) International classification :A61K31/55,A61K39/395,A61K9/28
(31) Priority Document No :61/355482
(32) Priority Date :16/06/2010
(33) Name of priority country :U.S.A.
(86) International Application No :PCT/US2011/040647
Filing Date :16/06/2011
(87) International Publication No :WO 2011/159871
(61) Patent of Addition to Application Number :NA
Filing Date :NA
(62) Divisional to Application Number :NA
Filing Date :NA

(71)**Name of Applicant :**
1)EMBERA NEUROTHERAPEUTICS INC
Address of Applicant :Biospace 1 2031 Kings Highway Shreveport LA 71103 U.S.A.
2)BOARD OF SUPERVISORS OF LOUISIANA STATE UNIVERSITY AND AGRICULTURAL AND MECHANICAL COLLEGE
(72)**Name of Inventor :**
1)GOEDERS Nicholas E.
2)FOX Barbara S.
3)GUERIN Glenn

(57) Abstract :
The present invention features, inter alia pharmaceutically acceptable compositions that include metyrapol as the sole pharmaceutically active agent; compositions that include metyrapol and at least one additional pharmaceutically active agent; compositions in which the agent targeting the HPA axis is itself new or modified (e.g., a bi specific antibody designed to traverse the blood brain barrier or a known compound redesigned by for example conjugation to a substance that traverses the blood brain barrier); and compositions in which the agent targeting the HPA axis is newly formulated in such a way that it fails to significantly inhibit cortisol production in the adrenal gland. For example the composition can be formulated to include a dosage that is too low to reduce plasma cortisol levels or formulated to preferentially affect the skin.

No. of Pages : 55 No. of Claims : 18

(12) PATENT APPLICATION PUBLICATION
(21) Application No.91/DELNP/2013 A
(19) INDIA
(22) Date of filing of Application :03/01/2013
(43) Publication Date : 05/09/2014

(54) Title of the invention : REBAR CLIP FOR JOINING DIFFERENT SIZE BARS

(51) International classification :E04C5/16
(31) Priority Document No :12/818676
(32) Priority Date :18/06/2010
(33) Name of priority country :U.S.A.
(86) International Application No :PCT/US2011/038675
Filing Date :01/06/2011
(87) International Publication No :WO 2011/159467
(61) Patent of Addition to Application Number :NA
Filing Date :NA
(62) Divisional to Application Number :NA
Filing Date :NA

(71)**Name of Applicant :**
1)KODI KLIP CORPORATION
Address of Applicant :509 West Spring Street Lebanon Tennessee 37087 U.S.A.
(72)**Name of Inventor :**
1)KODI Jon R.

(57) Abstract :
A rebar clip is provided for join ing a larger diameter rebar to a smaller diameter rebar transverse to the larger diameter rebar. In a first embodiment the clip includes diameter reducing tabs extending into upper arches of the clip for engagement with smaller diameter bars crossed on top of larger diameter bars. In a sec ond embodiment the clip includes diameter r e ducing tabs extending into lower arches of the clip so that the clip may hold larger diameter bars on top of smaller diameter bars. A guide track for a clip applying gun is provided which allows for use with either version of clips and with clips of the same nominal diameter for joining equal size bars.

No. of Pages : 32 No. of Claims : 40

(12) PATENT APPLICATION PUBLICATION
(19) INDIA
(22) Date of filing of Application :29/11/2012
(21) Application No.10356/DELNP/2012 A
(43) Publication Date : 05/09/2014

(54) Title of the invention : PROCESS FOR THE PREPARATION OF 1 ARYL PYRAZOL 3 ONE INTERMEDIATES USEFUL IN THE SYNTHESIS OF SIGMA RECEPTORS INHIBITORS

(51) International classification :C07C59/125,C07C69/96,C07D231/20
(31) Priority Document No :10382211.0
(32) Priority Date :30/07/2010
(33) Name of priority country :EPO
(86) International Application No :PCT/EP2011/063020
Filing Date :28/07/2011
(87) International Publication No :WO 2012/013755
(61) Patent of Addition to Application Number :NA
Filing Date :NA
(62) Divisional to Application Number :NA
Filing Date :NA

(71)**Name of Applicant :**
1)ESTEVE QU MICA S.A.
Address of Applicant :Avda. Mare de Du de Montserrat12 E 08024 Barcelona Spain
(72)**Name of Inventor :**
1)BARTRA SANMART Mart
2)BERENGUER MAIM Ramon
3)MEDRANO RUP‰REZ Jorge
4)GARC A GMEZ Jorge
5)ARIZA PIQUER Javier

(57) Abstract :
The invention relates to a process for preparing 1 aryl pyrazol 3 one intermediates tautomers and salts thereof to novel intermediates and to the use of the intermediates in the preparation of sigma receptor inhibitors.

No. of Pages : 58 No. of Claims : 15

(12) PATENT APPLICATION PUBLICATION
(19) INDIA
(22) Date of filing of Application :04/01/2013
(21) Application No.106/DELNP/2013 A
(43) Publication Date : 05/09/2014

(54) Title of the invention : DEVICE FOR A BIOLOGICAL LIQUID TREATMENT INSTALLATION

(51) International classification :B01D61/18,B01D61/20,A61M1/28
(31) Priority Document No :1054514
(32) Priority Date :08/06/2010
(33) Name of priority country :France
(86) International Application No :PCT/IB2011/052447
Filing Date :03/06/2011
(87) International Publication No :WO 2011/154883
(61) Patent of Addition to Application Number :NA
Filing Date :NA
(62) Divisional to Application Number :NA
Filing Date :NA

(71)**Name of Applicant :**
1)EMD MILLIPORE CORPORATION
Address of Applicant :290 Concord Road Billerica MA 01821 U.S.A.
(72)**Name of Inventor :**
1)CIROU Sbastien
2)REINBIGLER Ren
3)BUISSON Virginie
4)WEISSENBACH Jean Louis

(57) Abstract :
The invention concerns a device comprising: a base (2); a moveable or removable door (20) said device having a closed door position; and in the closed door position a circuit (8) comprising a bag comprising two flexible films and conveying network connectors and a press (9) comprising a first shell (16) disposed on said front face (5) of said base (2) and a second shell (17) disposed in said door (20); said bag being clamped between said first shell (16) and said second shell (17) in a state in which conduits of said network for conveying liquid are formed between said films.

No. of Pages : 45 No. of Claims : 15

(12) PATENT APPLICATION PUBLICATION
(19) INDIA
(22) Date of filing of Application :04/01/2013
(21) Application No.129/DELNP/2013 A
(43) Publication Date : 05/09/2014

(54) Title of the invention : ARTICLE WITH SELF BONDING FULLY CURED ELASTOMER

(51) International classification :C08K5/098
(31) Priority Document No :12/815241
(32) Priority Date :14/06/2010
(33) Name of priority country :U.S.A.
(86) International Application No :PCT/US2011/034043
Filing Date :27/04/2011
(87) International Publication No :WO 2011/159396
(61) Patent of Addition to Application Number :NA
Filing Date :NA
(62) Divisional to Application Number :NA
Filing Date :NA

(71)**Name of Applicant :**
1)THE GATES CORPORATION
Address of Applicant :1551 Wewatta Street Denver CO 80202 U.S.A.
(72)**Name of Inventor :**
1)HODJAT Yahya
2)FENG Yuding

(57) Abstract :
A rubber metal bonded article with an adhesion promoter in the rubber selected from neoalkoxy zirconates and polyimides. Articles requiring compressed rubber exhibit improved retention of compressive strain after assembly of the article and activation of the adhesion promoter. Also claimed is a method wherein a rubber composition may be fully cured then assembled between two substrates under compression then the adhesion promoter activated to form the bond.

No. of Pages : 23 No. of Claims : 19

(12) PATENT APPLICATION PUBLICATION
(19) INDIA
(22) Date of filing of Application :03/01/2013
(21) Application No.56/DELNP/2013 A
(43) Publication Date : 05/09/2014

(54) Title of the invention : 6 7 DIHYDRO 5H BENZO[7]ANNULENE DERIVATIVES PROCESS FOR PREPARATION THEREOF PHARMACEUTICAL PREPARATIONS COMPRISING THEM AND THE USE THEREOF FOR PRODUCTION OF MEDICAMENTS

(51) International classification :C07C317/28,C07C323/25,A61K31/145
(31) Priority Document No :10 2010 030 538.3
(32) Priority Date :25/06/2010
(33) Name of priority country :Germany
(86) International Application No :PCT/EP2011/060335
Filing Date :21/06/2011
(87) International Publication No :WO 2011/161101
(61) Patent of Addition to Application Number :NA
Filing Date :NA
(62) Divisional to Application Number :NA
Filing Date :NA

(71)**Name of Applicant :**
1)BAYER INTELLECTUAL PROPERTY GMBH
Address of Applicant :Alfred Nobel Strasse 10 40789 Monheim Germany
(72)**Name of Inventor :**
1)WINTERMANTEL Tim
2)M–LLER Carsten
3)BOTHE Ulrich
4)NUBBEMEYER Reinhard
5)ZORN Ludwig
6)KOSEMUND Dirk
7)TER LAAK Antonius
8)BOHLMANN Rolf
9)WORTMANN Lars
10)BIERER Donald

(57) Abstract :
The invention relates to selective estrogen receptor modulators (SERMs) and to processes for production thereof, to the use thereof for treatment and/or Prophylaxis of disorders, and to the use thereof for production of medicaments for treatment and/or Prophylaxis of disorders, more particularly of bleeding disorders, osteoporosis, endometriosis, myomas, hormone-dependent tumors, for hormone replacement therapy and for contraception.

No. of Pages : 335 No. of Claims : 13

(12) PATENT APPLICATION PUBLICATION
(21) Application No.606/DEL/2013 A
(19) INDIA
(22) Date of filing of Application :01/03/2013
(43) Publication Date : 05/09/2014

(54) Title of the invention : A REAL TIME SHOCK ABSORBER FOR AUTOMOBILES USING NANO FLUID

(51) International classification :F16G
(31) Priority Document No :NA
(32) Priority Date :NA
(33) Name of priority country :NA
(86) International Application No :NA
Filing Date :NA
(87) International Publication No : NA
(61) Patent of Addition to Application Number :NA
Filing Date :NA
(62) Divisional to Application Number :NA
Filing Date :NA

(71)**Name of Applicant :**
1)DIRECTOR GENERAL, DEFENCE RESEARCH AND DEVELOMENT ORGANISATION
Address of Applicant :MINISTRY OF DEFENCE, GOVT OF INDIA, ROOM NO 348, B - WING, DRDO BHAWAN, RAJAJI MARG, NEW DELHI 110011 Delhi India
(72)**Name of Inventor :**
1)REJI JOHN
2)RAMESH KUMAR ADIYODI VEETIL
3)SHIV KUMAR

(57) Abstract :
Colloidal suspensions of rigid particles in liquids forms shear thickening fluids which can form alternative to fluid systems which are activated by an electric or magnetic fields. Thickening of shear thickening fluids beyond a critical shear rate can be exploited for the design and development of damping devices. A shear thickening fluid based anti-vibration damper and shock absorber consists of a shear thickening fluid chamber and load bearing piston rod partially enclosed with elastomeric component and shear thickening fluid. Depending on the intensity of vibration the rheology of the fluid change and this change dictates the damping characteristic of the suspension.

No. of Pages : 8 No. of Claims : 4

(12) PATENT APPLICATION PUBLICATION
(21) Application No.9817/DELNP/2012 A
(19) INDIA
(22) Date of filing of Application :12/11/2012
(43) Publication Date : 05/09/2014

(54) Title of the invention : METHODS AND DEVICES FOR ENHANCING CONTAMINANT REMOVAL BY RARE EARTHS

(51) International classification :C01G28/00
(31) Priority Document No :61/323758
(32) Priority Date :13/04/2010
(33) Name of priority country :U.S.A.
(86) International Application No :PCT/US2011/032348
Filing Date :13/04/2011
(87) International Publication No :WO 2011/130427
(61) Patent of Addition to Application Number :NA
Filing Date :NA
(62) Divisional to Application Number :NA
Filing Date :NA

(71)**Name of Applicant :**
1)MOLYCORP MINERALS LLC
Address of Applicant :5619 Denver Tech Center Pkwy Suite 1000 Greenwood Village CO 80111 U.S.A.
(72)**Name of Inventor :**
1)HASSLER Carl R.
2)BURBA John L.
3)WHITEHEAD Charles F.
4)LUPO Joseph
5)ORIARD Timothy L.

(57) Abstract :
Embodiments are provided for removing a variety of contaminants using both rare earth and non rare earth containing treatment elements. In one embodiment the downstream treatment element is the rare earth containing treatment element the upstream treatment element is the non rare earth containing treatment element the interferer comprises one or more of the following: PO4(3) C03(2) Si03(2) bicarbonate vanadate and a halogen and the target material is one or more of a chemical agent a colorant a dyo intermediate a biological material an organic carbon a microbe an oxyanion and mixtures thereof. In another embodiment the downstream treatment element is the non rare earth containing treatment element the upstream treatment element is the rare earth containing treatment element and the interferer and target material are each one or more of a chemical agent a colorant a dye intermediate a biological material an organic carbon a microbe an oxyanion a halogen a halide compound and mixtures thereof.

No. of Pages : 88 No. of Claims : 39

(12) PATENT APPLICATION PUBLICATION
(19) INDIA
(22) Date of filing of Application :03/01/2013
(21) Application No.62/DELNP/2013 A
(43) Publication Date : 05/09/2014

(54) Title of the invention : LARGE EFFECTIVE AREA FIBER WITH GRADED INDEX GE FREE CORE

(51) International classification :G02B6/02,G02B6/028
(31) Priority Document No :12/827333
(32) Priority Date :30/06/2010
(33) Name of priority country :U.S.A.
(86) International Application No :PCT/US2011/041353
Filing Date :22/06/2011
(87) International Publication No :WO 2012/003120
(61) Patent of Addition to Application Number :NA
Filing Date :NA
(62) Divisional to Application Number :NA
Filing Date :NA

(71)**Name of Applicant :**
1)CORNING INCORPORATED
Address of Applicant :1 Riverfront Plaza Corning New York 14831 U.S.A.
(72)**Name of Inventor :**
1)BICKHAM Scott R.
2)KHRAPKO Rostislav Radiyevich
3)MISHRA Snigdharaj K.

(57) Abstract :
According to some embodiments an optical waveguide fiber comprises (i) a Ge free core having an effective area of 100 m 2 to 150 m 2, at 1550 nm wavelength, said core comprising: a) a central core region extending radially outwardly from a centerline to a radius ri, and having a relative refractive index percent profile Ai(r) in % measured relative to pure silica, wherein -0.1 % < D i (r) <0. 12 %, wherein the central core region has a maximum relative refractive index percent, DIMAC; (b) a first annu lar core region surrounding and directly adjacent to the central core region, having an a value 1.5 < a < 10, and extending to an outer radius r2, wherein 6 m <r2 < 10 mp , and having a relative refractive index percent profile, 2(r) in % measured relative to pure silica, a minimum relative refractive index D 2MIN, a maximum relative refractive index D 2MAC and the relative refractive index measured at a radius r = 2 mp , wherein 0.45 < D 2 <0; -0.25>D 2MIN ³ -0.45 and DIMAC > D 2(G =2 m) ; (c) a fluorine doped second an o nular region surrounding and directly adjacent to the first annular core region and extending to a radius 20 m <r < 30 m and having a negative relative refractive index percent profile, (r) in %, measured relative to pure silica, with a minimum relative r e ofractive index percent D MIN and -0.5 % < D MIN < -0.25 %; and D MIN£ D 2MIN; (ii) a cladding surrounding the core and having a rel ative refractive index percent A (r) in % measured relative to pure silica

No. of Pages : 22 No. of Claims : 20

(12) PATENT APPLICATION PUBLICATION
(21) Application No.9944/DELNP/2012 A
(19) INDIA
(22) Date of filing of Application :16/11/2012
(43) Publication Date : 05/09/2014

(54) Title of the invention : INVENTION RELATING TO ROTOR BLADES IN PARTICULAR FOR WIND POWER INSTALLATIONS

(51) International classification :F03D1/06,F03D3/06
(31) Priority Document No :10162448.4
(32) Priority Date :10/05/2010
(33) Name of priority country :EPO
(86) International Application No :PCT/EP2011/057466
Filing Date :10/05/2011
(87) International Publication No :WO 2011/141444
(61) Patent of Addition to Application Number :NA
Filing Date :NA
(62) Divisional to Application Number :NA
Filing Date :NA

(71)**Name of Applicant :**
1)TECHNISCHE UNIVERSIT„T DARMSTADT
Address of Applicant :Karolinenplatz 5 64283 Darmstadt Germany
(72)**Name of Inventor :**
1)LAMBIE Benjamin
2)HUFNAGEL Klaus

(57) Abstract :
A rotor blade is provided, in particular for wind power installations, having means for Variation of the blade camber wherein the blade camber is varied by means of elements which are passively coupled to one another, that is to say without - any external energy supply, apart from the energy contained in the air flowing around the rotor blade. For this purpose, one of the elements is in each case arranged on the leading edge and trailing edge of the profile of the rotor blade. The coupling of the elements, the stiffhess of the profile and the level of the damping are in this case designed to be variable.

No. of Pages : 78 No. of Claims : 20

(12) PATENT APPLICATION PUBLICATION
(19) INDIA
(22) Date of filing of Application :16/11/2012
(21) Application No.9945/DELNP/2012 A
(43) Publication Date : 05/09/2014

(54) Title of the invention : NAVIGATION DEVICES AND METHODS CARRIED OUT THEREON

(51) International classification :G01C21/34,G06Q10/00
(31) Priority Document No :61/282,927
(32) Priority Date :23/04/2010
(33) Name of priority country :U.S.A.
(86) International Application No :PCT/EP2011/050421
Filing Date :13/01/2011
(87) International Publication No :WO 2011/131376
(61) Patent of Addition to Application Number :NA
Filing Date :NA
(62) Divisional to Application Number :NA
Filing Date :NA

(71)**Name of Applicant :**
1)TOMTOM INTERNATIONAL B.V.
Address of Applicant :(IP Creation) Oosterdoksstraat 114 NL 1011 DK Amsterdam Netherlands
2)TOMTOM DEVELOPMENT GERMANY GMBH
(72)**Name of Inventor :**
1)SCHILLING Heiko
2)GAWRILOW Ewgenij
3)HILGER Moritz
4)PROFOUS Andreas
5)WERBER J¼rgen
6)SERBANESCU Alexandru

(57) Abstract :
This invention concerns a method of determining a route using map data comprising a plurality of navigable paths the map data divided into a plurality of regions. The method comprises using at least one processing apparatus to: receive an origin and a destination on the map data and a selection of one of a plurality of cost functions and determine a route from the origin to the destination using the map data and minimum cost data that identifies minimum cost paths between regions of the map data. The minimum cost data identifies more than one minimum cost path between a pair of the regions if different minimum cost paths exist between the pair of regions for different cost functions and determining a route comprises identifying from the minimum cost paths for the pair of regions comprising the origin and destination the minimum cost path having a lowest cost for the selected cost function.

No. of Pages : 111 No. of Claims : 11

(12) PATENT APPLICATION PUBLICATION
(19) INDIA
(22) Date of filing of Application :16/11/2012

(21) Application No.9946/DELNP/2012 A
(43) Publication Date : 05/09/2014

(54) Title of the invention : DEVICE

(51) International classification	:A61M25/00,A61M25/06,A61B17/34
(31) Priority Document No	:PA 2010 70200
(32) Priority Date	:11/05/2010
(33) Name of priority country	:Denmark
(86) International Application No	:PCT/EP2011/002325
Filing Date	:10/05/2011
(87) International Publication No	:WO 2011/141162
(61) Patent of Addition to Application Number	:NA
Filing Date	:NA
(62) Divisional to Application Number	:NA
Filing Date	:NA

(71)**Name of Applicant :**
1)PLEURATECH APS
Address of Applicant :Brendstrupgardsvej 102 Arhus N DK 8200 Denmark
(72)**Name of Inventor :**
1)KRISTENSEN Peter Heydorn
2)KATBALLE Niels

(57) Abstract :
The present invention is directed to a method and a device for accurately guiding a chest tube to an intended position within a pleural cavity of an animal or human being. There is also provided a kit of parts comprising a catheter and a catheter guiding device according to the present invention.

No. of Pages : 80 No. of Claims : 47

(12) PATENT APPLICATION PUBLICATION
(19) INDIA
(22) Date of filing of Application :03/01/2013
(21) Application No.70/DELNP/2013 A
(43) Publication Date : 05/09/2014

(54) Title of the invention : METHOD OF CLEANSING HAIR

(51) International classification :A61K8/46
(31) Priority Document No :61/364519
(32) Priority Date :15/07/2010
(33) Name of priority country :U.S.A.
(86) International Application No :PCT/US2011/044012
Filing Date :14/07/2011
(87) International Publication No :WO 2012/009539
(61) Patent of Addition to Application Number :NA
Filing Date :NA
(62) Divisional to Application Number :NA
Filing Date :NA

(71)**Name of Applicant :**
1)THE PROCTER & GAMBLE COMPANY
Address of Applicant :One Procter & Gamble Plaza Cincinnati Ohio 45202 U.S.A.
(72)**Name of Inventor :**
1)HUTTON Howard David III
2)SCHEIBEL Jeffrey John
3)KITKO David Johnathan
4)XU Jun
5)SAUNDERS Charles Winston
6)PRICE Kenneth Nathan
7)URBIN Stephanie Ann
8)GREEN Phillip Richard

(57) Abstract :
Method of cleansing hair comprising: (a) applying a composition to the hair; (b) dissolving and lathering the composition using a water based solvent; (c) rinsing the hair with a water based solvent; wherein during the rinsing a total of about 100 gram to about 300 gram of water based solvent per gram of hair (dry weight) is employed; wherein the composition comprises from about 3 wt% to about 35 wt% of a mixture of at least two compounds of Formula I.

No. of Pages : 27 No. of Claims : 15

(12) PATENT APPLICATION PUBLICATION
(19) INDIA
(22) Date of filing of Application :03/01/2013
(21) Application No.79/DELNP/2013 A
(43) Publication Date : 05/09/2014

(54) Title of the invention : PROSTHESIS FOR PARTIAL REPLACEMENT OF A TUBULAR BONE

(51) International classification :A61F2/28,A61F2/30,A61F2/36
(31) Priority Document No :10006098.7
(32) Priority Date :11/06/2010
(33) Name of priority country :EPO
(86) International Application No :PCT/EP2011/002875
Filing Date :10/06/2011
(87) International Publication No :WO 2011/154156
(61) Patent of Addition to Application Number :NA
Filing Date :NA
(62) Divisional to Application Number :NA
Filing Date :NA

(71)**Name of Applicant :**
1)WALDEMAR LINK GMBH & CO. KG
Address of Applicant :22315 Hamburg Germany
(72)**Name of Inventor :**
1)LINK Helmut D.
2)D„NIKE Andreas
3)JENDRO G¼nther

(57) Abstract :
The invention relates to a prosthesis for at least partial replacement of a tubulr bone and of an adjacent joint, comprising an elongate shaft (1) with a first end and a second end, and a joint me- Fig. 1 chanism (2) arranged at the second end of the shaft (1), wherein a length-adjusting mechanism (3) is provided which actuates the shaft (1) along the axis (10) thereof in the manner of a telescope. The shaft (1) and the joint mechanism (2) are coupled via a plug connection with matching cone connectors (18, 29), wherein the length-adjusting mechanism (3) is of a modular design and, at the proximal and distal ends thereof, is provided with the matching cone plug connectors (18, 19), and it is further provided with an anti-rotation means (35, 37) that acts with a form fit.

No. of Pages : 35 No. of Claims : 21

(12) PATENT APPLICATION PUBLICATION
(21) Application No.92/DELNP/2013 A
(19) INDIA
(22) Date of filing of Application :03/01/2013
(43) Publication Date : 05/09/2014

(54) Title of the invention : METHOD AND SYSTEM OF AUTOMATIC DETERMINATION OF GEOMETRIC ELEMENTS FROM A 3D MEDICAL IMAGE OF A BONE

(51) International classification	:G06T7/00,G06T7/60,G06T17/20
(31) Priority Document No	:61/355203
(32) Priority Date	:16/06/2010
(33) Name of priority country	:U.S.A.
(86) International Application No	:PCT/IB2011/001684
Filing Date	:16/06/2011
(87) International Publication No	:WO 2011/158114
(61) Patent of Addition to Application Number	:NA
Filing Date	:NA
(62) Divisional to Application Number	:NA
Filing Date	:NA

(71)**Name of Applicant :**
1)A² SURGICAL
Address of Applicant :Saills F 38830 Saint Pierre dAllevard France
(72)**Name of Inventor :**
1)CHABANAS Laurence
2)LAVALLEE Stphane
3)NESME Matthieu
4)SCHERS Jonathan

(57) Abstract :
The invention relates to an automated method for precise determination of the head center and radius and the neck axis of an articulated bone from acquired 3D medical image of an articulation comprising the following steps: i) determining from a 3D image of the bone an approximate sphere (SFO) of the head of the bone that substantially fits the spherical portion of the head of the bone; ii) constructing from the 3D image and the approximate sphere (SFO) a 3D surface model (S) of the bone; iii) determining from the 3D surface model (S) and from the approximate sphere (SFO) an approximate neck axis (AXO) of the neck of the bone; iv) determining from the 3D surface model (S) and the approximate sphere (SFO) a precise sphere (SF); v) determining from the 3D surface model (S) the precise sphere (SF) and the approximate neck axis (AXO) a precise neck axis (AX1).

No. of Pages : 48 No. of Claims : 22

(12) PATENT APPLICATION PUBLICATION
(21) Application No.9941/DELNP/2012 A
(19) INDIA
(22) Date of filing of Application :16/11/2012
(43) Publication Date : 05/09/2014

(54) Title of the invention : SWITCH SYSTEM FOR HELMET MOUNTED ELECTRONIC DEVICE

(51) International classification :G01V8/20
(31) Priority Document No :12/789,703
(32) Priority Date :28/05/2010
(33) Name of priority country :U.S.A.
(86) International Application No :PCT/US2011/036912
Filing Date :18/05/2011
(87) International Publication No :WO 2011/149728
(61) Patent of Addition to Application Number :NA
Filing Date :NA
(62) Divisional to Application Number :NA
Filing Date :NA

(71)**Name of Applicant :**
1)EXELIS INC.
Address of Applicant :1650 Tysons Boulevard Suite 1700 McLean Virginia 22012 U.S.A.
(72)**Name of Inventor :**
1)HAMMOND John Barnett

(57) Abstract :
Helmet mounted switch systems are disclosed. A helmet mounted switch system comprises a mount portion an electronic device a power source at least one accelerometer and a processor. The mount portion is rotatable around a rotation axis. The electronic device is mounted to the mount portion. The power source is configured to switchably supply power to the electronic device. The at least one accelerometer is operable to measure an acceleration of the mount portion. The system may also include at least one gyroscope operable to measure a rotation of the mount portion. The processor is configured to receive acceleration data. The processor is programmed to determine whether the mount portion is rotating around the rotation axis based on the acceleration data. The processor is programmed to change a power state of the electronic device when the mount portion is rotating around the rotation axis.

No. of Pages : 27 No. of Claims : 21

(12) PATENT APPLICATION PUBLICATION
(19) INDIA
(22) Date of filing of Application :03/01/2013
(21) Application No.83/DELNP/2013 A
(43) Publication Date : 05/09/2014

(54) Title of the invention : A METHOD FOR DETERMINING ARTICULAR BONE DEFORMITY RESECTION USING MOTION PATTERNS

(51) International classification :G06T17/00,G06T19/20,A61B5/00
(31) Priority Document No :61/355209
(32) Priority Date :16/06/2010
(33) Name of priority country :U.S.A.
(86) International Application No :PCT/IB2011/001686
Filing Date :16/06/2011
(87) International Publication No :WO 2011/158116
(61) Patent of Addition to Application Number :NA
Filing Date :NA
(62) Divisional to Application Number :NA
Filing Date :NA

(71)**Name of Applicant :**
1)A² SURGICAL
Address of Applicant :Saills F 38830 Saint Pierre dAllevard France
(72)**Name of Inventor :**
1)CHABANAS Laurence
2)LAVALLEE Stphane
3)TONETTI Jr´me
4)BYRD Thomas
5)KELLY Bryan Talmadge
6)LARSON Christopher

(57) Abstract :
The invention relates to a method for real time determination an optimal corrected surface of a first bone and/or a second bone forming together an articulation the first and/or second bones presenting an overgrowth deformation said corrected surface providing a greater range of motion of the articulation the method comprising the following steps: i) constructing from acquired images of the articulation 3D voxel models of the first bone and the second bone; ii) for each of first and second bone voxel models constructing a coordinate system defined by a center and three axes; iii) applying a motion pattern on the coordinate system of the second bone with respect to the coordinate system of the first bone a motion pattern being a set of contiguous positions of the first or second bone coordinate systems with respect to the other bone coordinate system the contiguous positions defining a movement of one bone with respect to the other wherein said motion pattern is initially loaded from a data base of predefined motion patterns; iv) determining a resection volume from said motion pattern as being the union of interpenetration volumes of the first or second bone voxel model with the other bone voxel model for each position of the motion pattern; v) determining the optimal corrected surface by virtually removing said resection volume from the first and/or the second bone voxel model.

No. of Pages : 31 No. of Claims : 15

(12) PATENT APPLICATION PUBLICATION
(19) INDIA
(22) Date of filing of Application :16/11/2012
(21) Application No.9950/DELNP/2012 A
(43) Publication Date : 05/09/2014

(54) Title of the invention : METHOD FOR ESTABLISHING A SECURE AND AUTHORIZED CONNECTION BETWEEN A SMART CARD AND A DEVICE IN A NETWORK

(51) International classification :H04W12/12,H04W12/04,H04W88/04
(31) Priority Document No :NA
(32) Priority Date :NA
(33) Name of priority country :NA
(86) International Application No :PCT/EP2010/058749
Filing Date :21/06/2010
(87) International Publication No :WO 2011/160674
(61) Patent of Addition to Application Number :NA
Filing Date :NA
(62) Divisional to Application Number :NA
Filing Date :NA

(71)**Name of Applicant :**
1)NOKIA SIEMENS NETWORKS OY
Address of Applicant :Karaportti 3 FI 02610 Espoo Finland
(72)**Name of Inventor :**
1)HORN Guenther
2)MOELLER Wolf Dietrich

(57) Abstract :
It is provided a method a method for establishing a first secure and authorized connection between a smart card (504) and a first device (501) in a network (100) wherein the first device (501) comprises a second secure connection to a second device (502) wherein the method comprises storing a first security data; transferring the first security data between the first device (501) and the second device (502); providing the first security data at the first device (501); establishing a binding between the smart card (504) and the first device (501) via the first secure and authorized connection utilizing the first security data; authorizing the binding between the smart card (504) and the first device (501); and sending a second security data from the smart card (504) to the first device (501) via the first secure and authorized connection whereas the second security data may be usable for authentication of the first device (501) to the network (100).

No. of Pages : 43 No. of Claims : 20

(12) PATENT APPLICATION PUBLICATION
(19) INDIA
(22) Date of filing of Application :16/11/2012
(21) Application No.9951/DELNP/2012 A
(43) Publication Date : 05/09/2014

(54) Title of the invention : THERAPEUTIC LIPOSOMES AND METHODS FOR PRODUCING AND USING THE SAME

(51) International classification :A61K9/127,A61K31/66,A61K31/662
(31) Priority Document No :61/333173
(32) Priority Date :10/05/2010
(33) Name of priority country :U.S.A.
(86) International Application No :PCT/US2011/035992
Filing Date :10/05/2011
(87) International Publication No :WO 2011/143271
(61) Patent of Addition to Application Number :NA
Filing Date :NA
(62) Divisional to Application Number :NA
Filing Date :NA

(71)**Name of Applicant :**
1)SCHMIDT Michael A.
Address of Applicant :4885 Riverbend Ave. Boulder CO 80301 U.S.A.
2)MILLER Joseph J.
(72)**Name of Inventor :**
1)SCHMIDT Michael A.
2)MILLER Joseph J.

(57) Abstract :
The present invention provides therapeutic liposomes and methods for producing and using the same. In particular therapeutic liposomes of the invention comprise phospholipids comprising C C fatty acid ester moieties. In some embodiments these therapeutic liposomes are used in assisting delivery of an active compound e.g. a drug and/or a nutraceutical to a subject. In some embodiments compositions of the invention have synergistic therapeutic effect.

No. of Pages : 27 No. of Claims : 19

(12) PATENT APPLICATION PUBLICATION
(19) INDIA
(22) Date of filing of Application :16/11/2012
(21) Application No.9954/DELNP/2012 A
(43) Publication Date : 05/09/2014

(54) Title of the invention : ELEVATOR MOTOR POWER SUPPLY CONTROL

(51) International classification :B66B 1/34
(31) Priority Document No :NA
(32) Priority Date :NA
(33) Name of priority country :NA
(86) International Application No :PCT/US2010/043868
Filing Date :30/07/2010
(87) International Publication No : NA
(61) Patent of Addition to Application Number :NA
Filing Date :NA
(62) Divisional to Application Number :NA
Filing Date :NA

(71)**Name of Applicant :**
1)OTIS ELEVATOR COMPANY
Address of Applicant :Ten Farm Springs Road Farmington Connecticut 06032-2568 U.S.A.
(72)**Name of Inventor :**
1)MARVIN Daryl J.
2)MANN Michael
3)MILLETT Steven M.

(57) Abstract :
An exemplary power supply assembly includes a drive device having a bus capacitor. A switch associated with an input side of the drive device selectively connects the drive device to a power supply. An inductor has an impedance that limits an amount of current supplied to the bus capacitor during an initial charging of the bus capacitor when the switch connects the input side of the drive device to the power supply. A restrictive circuit portion dampens a resonance effect of the inductor. The restrictive circuit portion has a resistance that allows the bus capacitor to charge quickly. The impedance of the inductor has a more significant effect on how quickly the bus capacitor charges than an effect of the resistance. A dampening factor of the restrictive circuit controls a voltage of the bus capacitor during the charging of the bus capacitor.

No. of Pages : 14 No. of Claims : 20

(12) PATENT APPLICATION PUBLICATION
(19) INDIA
(22) Date of filing of Application :02/01/2013
(21) Application No.30/DELNP/2013 A
(43) Publication Date : 05/09/2014

(54) Title of the invention : CHABAZITE AND CLINOPTILOLITE IN OXYGEN ABSORBERS

(51) International classification :B01J20/18,B01J20/00,B01J20/30
(31) Priority Document No :12/813433
(32) Priority Date :10/06/2010
(33) Name of priority country :U.S.A.
(86) International Application No :PCT/US2011/039967
Filing Date :10/06/2011
(87) International Publication No :WO 2011/156704
(61) Patent of Addition to Application Number :NA
Filing Date :NA
(62) Divisional to Application Number :NA
Filing Date :NA

(71)**Name of Applicant :**
1)MULTISORB TECHNOLOGIES INC.
Address of Applicant :325 Harlem Road Buffalo New York 14224 U.S.A.
(72)**Name of Inventor :**
1)POWERS Thomas H.
2)PAYNE David S.
3)CRUMP John W.
4)MCKEDY George E.

(57) Abstract :
This invention relates generally to an oxygen absorber and more particularly to oxygen absorbers including iron and one or more oxygen and water absorbing feldspars such as Chabazite and Clinoptilolite.

No. of Pages : 22 No. of Claims : 20

(12) PATENT APPLICATION PUBLICATION
(19) INDIA
(22) Date of filing of Application :02/01/2013
(21) Application No.31/DELNP/2013 A
(43) Publication Date : 05/09/2014

(54) Title of the invention : METHODS OF TREATING OR PREVENTING ESTROGEN RELATED DISEASES

(51) International classification :A61K31/453,A61K31/5685,A61P15/00
(31) Priority Document No :61/355465
(32) Priority Date :16/06/2010
(33) Name of priority country :U.S.A.
(86) International Application No :PCT/CA2011/000709
Filing Date :16/06/2011
(87) International Publication No :WO 2011/156908
(61) Patent of Addition to Application Number :NA
Filing Date :NA
(62) Divisional to Application Number :NA
Filing Date :NA

(71)**Name of Applicant :**
1)ENDORECHERCHE INC.
Address of Applicant :2989 de la Promenade Sainte Foy Qubec G1W 2J5 Canada
(72)**Name of Inventor :**
1)LABRIE Fernand

(57) Abstract :
Methods for treating or reducing the likelihood of acquiring estrogen related (e.g. estrogen exacerbated) diseases including endometriosis include administering to a patient a selective estrogen receptor modulator (SERM) in combination with inhibiting ovarian secretions e.g. by administering an LHRH agonist or antagonist. In some embodiments a precursor of sex steroids said precursor being selected from the group consisting of dehydroepiandrosterone (DHEA) dehydroepiandrosterone sulfate (DHEA S) androst 5 ene 3 17 diol (5 diol) and androstenedione or a compound transformed into one of these is also administered

No. of Pages : 108 No. of Claims : 23

(12) PATENT APPLICATION PUBLICATION
(19) INDIA
(22) Date of filing of Application :02/01/2013
(21) Application No.49/DELNP/2013 A
(43) Publication Date : 05/09/2014

(54) Title of the invention : CRIMPED OR SWAGED COUPLINGS FOR CABLE REINFORCED HOSES

(51) International classification :F16L33/207
(31) Priority Document No :12/803096
(32) Priority Date :18/06/2010
(33) Name of priority country :U.S.A.
(86) International Application No :PCT/US2011/039615
Filing Date :08/06/2011
(87) International Publication No :WO 2011/159535
(61) Patent of Addition to Application Number :NA
Filing Date :NA
(62) Divisional to Application Number :NA
Filing Date :NA

(71)**Name of Applicant :**
1)THE GATES CORPORATION
Address of Applicant :(a Delaware Corporation) 1551 Wewatta Street Denver CO 80202 U.S.A.
(72)**Name of Inventor :**
1)TRUJILLO Ron
2)SWIFT Jonathan Clark
3)MILLER Lance D.

(57) Abstract :
A hose coupling (200) for fitment to an end of a cable reinforced hose (305) comprises a unitary stem (202) having a cable trap groove portion (215) having an outside diameter greater than an inside diameter of a tube (317) of the hose (305) and less than an inside diameter of the hose with the tube (317) skived from the hose. A unitary ferrule (201) defines at least one cable trap rib (236) corresponding to the cable trap groove (215) and having an inside diameter less than the outside diameter of the cable reinforced hose and greater than an outside diameter of the hose with material (333) covering the cable skived from the hose. The groove width is at least the width of the rib plus twice the diameter of cable reinforcing the hose. Epoxy may be disposed between the hose tube and the stem for sealing or injected between the ferrule and the stem permeating the cable.

No. of Pages : 22 No. of Claims : 27

(12) PATENT APPLICATION PUBLICATION
(21) Application No.85/DELNP/2013 A
(19) INDIA
(22) Date of filing of Application :03/01/2013
(43) Publication Date : 05/09/2014

(54) Title of the invention : INTEGRATED SYSTEM FOR ELECTROCHEMICAL ENERGY STORAGE SYSTEM

(51) International classification :H01M8/04,H01M8/02,H01M8/18
(31) Priority Document No :12/820972
(32) Priority Date :22/06/2010
(33) Name of priority country :U.S.A.
(86) International Application No :PCT/US2011/038607
Filing Date :31/05/2011
(87) International Publication No :WO 2011/162915
(61) Patent of Addition to Application Number :NA
Filing Date :NA
(62) Divisional to Application Number :NA
Filing Date :NA

(71)**Name of Applicant :**
1)JD HOLDING INC.
Address of Applicant :Scotia Center 4th Floor P.O. Box 2804 George Town Grand Cayman Island
(72)**Name of Inventor :**
1)HARPER Matthew Albert Maclennan
2)LEPP Gary
3)HENNESSY Timothy David John

(57) Abstract :
The present disclosure relates to electrochemical energy storage systems. In particular the present disclosure relates to particular systems and methods for providing a compact framework in which to house an electrochemical energy storage system. Various embodiments of electrochemical energy storage systems are disclosed that include a flow manifold and a flow manifold cover. The flow manifold may provide a plurality of channels for distributing liquid reactant to an electrical cell stack. The flow manifold may be utilized in conjunction with a flow manifold cover. The flow manifold cover may be configured to support a variety of components of a liquid reactant distribution system. Such components may include liquid reactant pump motors inlet and outlet ports a reference cell and a variety of sensors. The distribution of liquid reactants to the cell stack from the inlet and outlet ports may be accomplished by way of the flow manifold cover.

No. of Pages : 21 No. of Claims : 20

(12) PATENT APPLICATION PUBLICATION
(21) Application No.9999/DELNP/2012 A
(19) INDIA
(22) Date of filing of Application :19/11/2012
(43) Publication Date : 05/09/2014

(54) Title of the invention : SYNERGISTIC ANTIOXIDANT COMPOSITION

(51) International classification :A23D7/06,A23D9/06,A23L1/03
(31) Priority Document No :10163753.6
(32) Priority Date :25/05/2010
(33) Name of priority country :EPO
(86) International Application No :PCT/EP2011/058240
Filing Date :20/05/2011
(87) International Publication No :WO 2011/147747
(61) Patent of Addition to Application Number :NA
Filing Date :NA
(62) Divisional to Application Number :NA
Filing Date :NA

(71)**Name of Applicant :**
1)NESTEC S.A.
Address of Applicant :Av. Nestl 55 CH 1800 Vevey Switzerland
(72)**Name of Inventor :**
1)JOURDAIN Laureline
2)SAGALOWICZ Laurent

(57) Abstract :
The present invention relates to an antioxidant composition comprising a galactolipid ascorbic acid and/or a derivative thereof and at least one further lipid. Further aspects of the invention are the method of manufacturing such an antioxidant composition as well as the use of galactolipids in combination with ascorbic acid and/or a derivative thereof for protecting a composition against oxidation. Particularly the invention relates to a composition to be used in food products.

No. of Pages : 25 No. of Claims : 15

(12) PATENT APPLICATION PUBLICATION
(21) Application No.1425/DEL/2012 A
(19) INDIA
(22) Date of filing of Application :09/05/2012
(43) Publication Date : 05/09/2014

(54) Title of the invention : LIQUID NUTRIENT FORMULATIONS FOR HYDROPONICS CEREAL CROPS WITH ADDED HERBS

(51) International classification :A01G
(31) Priority Document No :NA
(32) Priority Date :NA
(33) Name of priority country :NA
(86) International Application No :NA
Filing Date :NA
(87) International Publication No : NA
(61) Patent of Addition to Application Number :NA
Filing Date :NA
(62) Divisional to Application Number :NA
Filing Date :NA

(71)**Name of Applicant :**
1)AYURVET RESEARCH FOUNDATION
Address of Applicant :6th Floor Sagar Plaza District Center Vikas Marg Laxmi Nagar Delhi-110092 India.
(72)**Name of Inventor :**
1)Mohan Ji Saxena
2)Anup Kalra
3)Deepti Rai
4)Ashutosh Johri
5)Preeti

(57) Abstract :
The present invention relates to liquid nutrient formulations to be utilized in Hydroponics. The liquid nutrient formulation is comprised of all the essential elements and some herbs. The liquid nutrient formulation is utilized to enhance the seeds germination increased root and shoot length number of lateral roots and biomass.

No. of Pages : 14 No. of Claims : 12

(12) PATENT APPLICATION PUBLICATION
(21) Application No.1613/DEL/2012 A
(19) INDIA
(22) Date of filing of Application :28/05/2012
(43) Publication Date : 05/09/2014

(54) Title of the invention : ENCLOSURE FOR ENERGY METER

(51) International classification :G06F
(31) Priority Document No :NA
(32) Priority Date :NA
(33) Name of priority country :NA
(86) International Application No :NA
Filing Date :NA
(87) International Publication No : NA
(61) Patent of Addition to Application Number :NA
Filing Date :NA
(62) Divisional to Application Number :NA
Filing Date :NA

(71)**Name of Applicant :**
1)SECURE METERS LIMITED
Address of Applicant :P.O. Box 30 E Class Pratap Nagar Industrial Area Udaipur 313001 Rajasthan India
(72)**Name of Inventor :**
1)Suket Singhal
2)Ved Prakash

(57) Abstract :
THE PRESENT INVENTION PROVIDES AN ENCLOSURE FOR AN ENERGY METER; SAID ENCLOSURE COMPRISING: A TOP COVER COMPRISING A TOP WALL AND A SIDE WALLS DEFINING A HOLLOW CHAMBER; AND AN OPENING LOCATED OPPOSITE TO THE TOP WALL FOR ACCESSING THE SAID CHAMBER; A TERMINAL ASSEMBLY COMPRISING A HORIZONTAL PLATE COMPRISING TWO OPPOSING UPPER AND LOWER SURFACES FOR MOUNTING AN ENERGY METERING UNIT AND TERMINAL BLOCK RESPECTIVELY; THE CHAMBER IS SHAPED AND SIZED SO AS TO RECEIVE AND ACCOMMODATE THE ENERGY METERING UNIT MOUNTED ON THE HORIZONTAL PLATE AND ONCE THE ENERGY METERING UNIT ACCOMMODATED IN THE CHAMBER; THE HORIZONTAL PLATE OF THE TERMINAL MEMBER IS SECURED WITH THE TOP COVER BY MEANS OF SIDE LOCKS THEREBY CLOSING THE OPENING OF THE CHAMBER.

No. of Pages : 21 No. of Claims : 16

(12) PATENT APPLICATION PUBLICATION
(21) Application No.39/DELNP/2013 A
(19) INDIA
(22) Date of filing of Application :02/01/2013
(43) Publication Date : 05/09/2014

(54) Title of the invention : TILT SENSOR FOR A DEVICE AND METHOD FOR DETERMINING THE TILT OF A DEVICE

(51) International classification :G01C9/06,G01C9/20
(31) Priority Document No :10173726.0
(32) Priority Date :23/08/2010
(33) Name of priority country :EPO
(86) International Application No :PCT/EP2011/064388
Filing Date :22/08/2011
(87) International Publication No :WO 2012/025491
(61) Patent of Addition to Application Number :NA
Filing Date :NA
(62) Divisional to Application Number :NA
Filing Date :NA

(71)**Name of Applicant :**
1)HEXAGON TECHNOLOGY CENTER GMBH
Address of Applicant :Heinrich Wild Strasse CH 9435 Heerbrugg Switzerland
(72)**Name of Inventor :**
1)LIPPUNER Heinz
2)METZLER Bernhard
3)AMANN Werner

(57) Abstract :
The invention relates to a tilt sensor (1) for a device, comprising a tank receiving a flowable medium (4), wherein the position of the medium (4) relative to the tank (3) depends on the tilt, and the tank (3) comprises a polygonal, in particular triangular, or an elliptical, in particular circular base, a source of electromagnetic radiation for generating projections of at least one part of a boundary of the medium (4), at least two detectors @ (Sa, Sb, 5c) for detecting one of the projections, respectively, and for converting same into signals, wherein the detectors (Sa, Sb, 5c) each comprise a detecting direction and the detecting directions of the detectors (Sa, Sb, 5c) are disposed at angles to each other, and further comprising an analysis unit (12) for determining the tilt in two axes from the signals of the at least two detectors (Sa, Sb, Sc), characterized in that the tilt is determined jointly for the two axes from a combination of the signals.

No. of Pages : 39 No. of Claims : 15

(12) PATENT APPLICATION PUBLICATION
(19) INDIA
(22) Date of filing of Application :03/01/2013
(21) Application No.60/DELNP/2013 A
(43) Publication Date : 05/09/2014

(54) Title of the invention : METHOD AND DEVICE PERTAINING TO COOLING OF DOSING UNITS OF SCR SYSTEMS

(51) International classification :F01N3/20,F01N9/00,F01N11/00
(31) Priority Document No :10506392
(32) Priority Date :21/06/2010
(33) Name of priority country :Sweden
(86) International Application No :PCT/SE2011/050789
Filing Date :20/06/2011
(87) International Publication No:WO 2011/162692
(61) Patent of Addition to Application Number :NA
Filing Date :NA
(62) Divisional to Application Number :NA
Filing Date :NA

(71)**Name of Applicant :**
1)Scania CV AB
Address of Applicant :S 151 87 Sdertlje Sweden
(72)**Name of Inventor :**
1)LILJESTRAND Andreas
2)BREMBERG Per
3)CARLSSON Ulf
4)ERIKSSON Lars

(57) Abstract :
The invention relates to a method for cooling a dosing unit (250) pertaining to SCR systems for exhaust cleaning comprising the steps after cessation of exhaust flow of cooling a reducing agent dosing unit (250) by means of reducing agent supplied to it and of intermittently running a feed device (230) to supply said coolant reducing agent and running said feed device (230) at reduced power compared with ordinary operation. The invention relates also to a computer programme product containing programme code (P) for a computer (200; 210) for implementing a method according to the invention. The invention relates also to an SCR system and a motor vehicle (100; 110) which is equipped with the SCR system.

No. of Pages : 33 No. of Claims : 16

(12) PATENT APPLICATION PUBLICATION
(19) INDIA
(22) Date of filing of Application :19/11/2012

(21) Application No.9990/DELNP/2012 A
(43) Publication Date : 05/09/2014

(54) Title of the invention : SHAVING RAZOR CARTRIDGE

(51) International classification :B26B21/22
(31) Priority Document No :12/817,280
(32) Priority Date :17/06/2010
(33) Name of priority country :U.S.A.
(86) International Application No :PCT/US2011/040273
Filing Date :14/06/2011
(87) International Publication No :WO 2011/159654
(61) Patent of Addition to Application Number :NA
Filing Date :NA
(62) Divisional to Application Number :NA
Filing Date :NA

(71)**Name of Applicant :**
1)THE GILLETTE COMPANY
Address of Applicant :World Shaving Headquarters IP/Legal Patent Department 3E One Gillette Park Boston Massachusetts 02127 U.S.A.
(72)**Name of Inventor :**
1)BRIDGES Kelly Daniel

(57) Abstract :
A wet shaving cartridge 12 comprising with a housing 16 having a guard 20 a cap 22 and a pair of spaced apart interior walls 40 45 between the cap and the guard. A blade retention bump 51 is positioned on at least one of the spaced apart interior walls. At least one resilient blade retention member 44 extends laterally from one of the interior walls toward the other interior wall. At least one clip 24 is mounted to the housing. At least one blade 18 is positioned between the resilient blade retention member and at least one of the interior walls. The blade is rigidly fixed in a first direction between the clip and the blade retention bumps and retained in a second direction between the resilient blade retention members and at least one of the interior walls.

No. of Pages : 20 No. of Claims : 15

(12) PATENT APPLICATION PUBLICATION
(21) Application No.9991/DELNP/2012 A
(19) INDIA
(22) Date of filing of Application :19/11/2012
(43) Publication Date : 05/09/2014

(54) Title of the invention : ELECTRICALLY INSULATING MATERIAL INSULATING PAPER AND INSULATING TAPE FOR A HIGH VOLTAGE ROTARY MACHINE

(51) International classification :B23B27/20,H01B3/02,H02K3/38
(31) Priority Document No :10 2010 019 721.1
(32) Priority Date :07/05/2010
(33) Name of priority country :Denmark
(86) International Application No :PCT/EP2011/056375
Filing Date :20/04/2011
(87) International Publication No :WO 2011/138173
(61) Patent of Addition to Application Number :NA
Filing Date :NA
(62) Divisional to Application Number :NA
Filing Date :NA

(71)**Name of Applicant :**
1)SIEMENS AKTIENGESELLSCHAFT
Address of Applicant :Wittelsbacherplatz 2 80333 M¼nchen Germany
(72)**Name of Inventor :**
1)GR–PPEL Peter
2)BROCKSCHMIDT Mario
3)POHLMANN Friedhelm

(57) Abstract :
The invention relates to an electrically insulating material for a high voltage rotary machine, comprising a base resin and a filler powder distributed in the base resin as the sole filler, formed of disc shaped particles made of aluminum oxide. An insulating paper for a high voltage rotary machine comprises the electrically insulating material. In insulating tape for a high voltage rotary machine comprises a carrier tape and a tape of an insulating paper, wherein the tape of the insulating paper is applied to and secured on the carrier tape.

No. of Pages : 9 No. of Claims : 7

(12) PATENT APPLICATION PUBLICATION
(21) Application No.9992/DELNP/2012 A
(19) INDIA
(22) Date of filing of Application :19/11/2012
(43) Publication Date : 05/09/2014

(54) Title of the invention : CURRENT MEASUREMENT APPARATUS AND CURRENT MEASUREMENT METHOD THEREOF

(51) International classification :G01R15/18,G01R19/20
(31) Priority Document No :201010230155.6
(32) Priority Date :15/07/2010
(33) Name of priority country :China
(86) International Application No :PCT/EP2011/056342
Filing Date :20/04/2011
(87) International Publication No :WO 2012/007195
(61) Patent of Addition to Application Number :NA
Filing Date :NA
(62) Divisional to Application Number :NA
Filing Date :NA

(71)**Name of Applicant :**
1)SIEMENS AKTIENGESELLSCHAFT
Address of Applicant :Wittelsbacherplatz 2 80333 M¼nchen Germany
(72)**Name of Inventor :**
1)MIN Ying Zong
2)DANKERT Mario
3)DU Feng
4)CHEN Wei Gang
5)ZHUO Yue

(57) Abstract :
The present invention provides an apparatus for current measurement comprising a magnetic ring (12) a coil (10) a sampling resistor (14) a driving voltage source (18) a comparator (16) and a differentiator and further comprising a first feedback unit (30) which acquires a first feedback signal from the sampling resistor with the first feedback signal being electrically connectable to an input end of the driving voltage source; and a second feedback unit (20) which can acquire the first feedback signal from said sampling resistor to obtain a second feedback signal after having the first feedback signal processed differentially and the second feedback signal being electrically connectable to an input end of the comparator with an output of the comparator being electrically connectable to another input end of the driving voltage source. The present invention further provides a method for current measurement. In particular it is the current measurement of a DC or AC current based on the principle of magnetic modulation.

No. of Pages : 19 No. of Claims : 9

(12) PATENT APPLICATION PUBLICATION
(19) INDIA
(22) Date of filing of Application :19/11/2012
(21) Application No.9993/DELNP/2012 A
(43) Publication Date : 05/09/2014

(54) Title of the invention : METHOD FOR PRODUCING A PIEZO ACTUATOR AND PIEZO ACTUATOR

(51) International classification :H01L41/24,H01L41/22,H01L41/083
(31) Priority Document No :10 2010 022 911.3
(32) Priority Date :07/06/2010
(33) Name of priority country :Denmark
(86) International Application No :PCT/EP2011/059285
Filing Date :06/06/2011
(87) International Publication No :WO 2011/154352
(61) Patent of Addition to Application Number :NA
Filing Date :NA
(62) Divisional to Application Number :NA
Filing Date :NA

(71)**Name of Applicant :**
1)CONTINENTAL AUTOMOTIVE GMBH
Address of Applicant :Vahrenwalder Strae 9 30165 Hannover Germany
(72)**Name of Inventor :**
1)BENKERT Katrin
2)B–DINGER Hermann
3)DENNELER Stefan
4)KASTL Harald Johannes
5)LENK Andreas
6)SCHUH Carsten

(57) Abstract :
The invention describes a method for producing a piezo actuator (100) with a piezo stack (1) and two outer electrodes (2, 3) arranged on the outside of the piezo stack (1). The method according to the invention comprises the following steps: provision of a fully active green stack (11) comprising a plurality of alternately successive green films (4, 5) and continuous inner electrode layers (6, 7) which are provided for the purpose of alternately being electrically connected to two outer electrodes (2, 3) to be arranged on the outside of the piezo stack (1) which is to be produced from the green stack (1) and being electrically insulated from the respective other outer electrode (2, 3); provision of the outside ofthe fully active green stack (1) with trenches (8, 9) in areas in which the inner electrode layers (6, 7) are intended to be electrically insulated from the corresponding outer electrodes (2, 3), as a result of which the trenches (8, 9) shorten the inner electrode layers (6, 7) in these areas from the outside ofthe green stack (1) to the inside; filling of the trenches (8, 9) with an electrically insulating slurry (10, 11); further processing of the green stack (1), the trenches (8, 9) of which are filled with the slurry (10, 11), as a result of which the green films (4, 5) produce piezo electric layers (4, 5) and the green stack (1) produces the piezo stack (1); mounting of the two outer electrodes (2, 3) on the outside of the piezo stack (1), so that the two outer electrodes (2, 3) are alternately electrically connected to the inner electrode layers (6, 7). The method according to the invention is distinguished in that the trenches (8, 9) are filled with the slurry (10, 11) using one of the following methods; screen printing, immersion, spraying or vacuum infiltration.

No. of Pages : 19 No. of Claims : 13

(12) PATENT APPLICATION PUBLICATION
(19) INDIA
(22) Date of filing of Application :11/12/2012
(21) Application No.10776/DELNP/2012 A
(43) Publication Date : 05/09/2014

(54) Title of the invention : OLIGO BENZAMIDE COMPOUNDS AND THEIR USE

(51) International classification :A01N37/12
(31) Priority Document No :61/349555
(32) Priority Date :28/05/2010
(33) Name of priority country :U.S.A.
(86) International Application No :PCT/US2011/038395
Filing Date :27/05/2011
(87) International Publication No :WO 2011/150360
(61) Patent of Addition to Application Number :NA
Filing Date :NA
(62) Divisional to Application Number :NA
Filing Date :NA

(71)**Name of Applicant :**
1)THE BOARD OF REGENTS OF THE UNIVERSITY OF TEXAS SYSTEM
Address of Applicant :201 West 7th Street Austin TX 78701 U.S.A.
(72)**Name of Inventor :**
1)AHN Jung Mo
2)RAJ Ganesh

(57) Abstract :
The present invention includes bis and tris benzamide compounds that block AR signaling and have anticancer activity. Uses for these compounds and pharmaceutical compositions containing the same also are provided.

No. of Pages : 125 No. of Claims : 67

(12) PATENT APPLICATION PUBLICATION
(19) INDIA
(22) Date of filing of Application :02/01/2013
(21) Application No.38/DELNP/2013 A
(43) Publication Date : 05/09/2014

(54) Title of the invention : 1 4 5 6 TETRAHYDRO PYRIMIDIN 2 YLAMINE COMPOUNDS

(51) International classification :C07D239/22,C07D239/70,C07D403/12
(31) Priority Document No :10172299.9
(32) Priority Date :09/08/2010
(33) Name of priority country :EPO
(86) International Application No :PCT/EP2011/063498
Filing Date :05/08/2011
(87) International Publication No :WO 2012/019966
(61) Patent of Addition to Application Number :NA
Filing Date :NA
(62) Divisional to Application Number :NA
Filing Date :NA

(71)**Name of Applicant :**
1)F. HOFFMANN LA ROCHE AG
Address of Applicant :Grenzacherstrasse 124 CH 4070 Basel Switzerland
2)SIENA BIOTECH S.P.A
(72)**Name of Inventor :**
1)BANNER David
2)GABELLIERI Emanuele
3)GUBA Wolfgang
4)HILPERT Hans
5)HORNSPERGER Benoit
6)HUMM Roland
7)MAUSER Harald
8)MAYWEG Alexander V.
9)NARQUIZIAN Robert
10)PINARD Emmanuel
11)ROGERS EVANS Mark
12)WOLTERING Thomas
13)WOSTL Wolfgang

(57) Abstract :
This invention relates to compounds of the formula wherein Rto R are as described below or to pharmaceutically acceptable salts thereof. These compounds are BACE2 inhibitors and can be used as medicaments for the therapeutic and/or prophylactic treatment of diseases such as diabetes particularly type 2 diabetes and other metabolic disorders.

No. of Pages : 206 No. of Claims : 41

(12) PATENT APPLICATION PUBLICATION
(19) INDIA
(22) Date of filing of Application :02/01/2013
(21) Application No.44/DELNP/2013 A
(43) Publication Date : 05/09/2014

(54) Title of the invention : POWER CONTROL DEVICE AND POWER CONTROL METHOD

(51) International classification :H02J3/32,G06Q10/00,H01M10/44
(31) Priority Document No :2010156636
(32) Priority Date :09/07/2010
(33) Name of priority country :Japan
(86) International Application No :PCT/JP2011/065409
Filing Date :29/06/2011
(87) International Publication No :WO 2012/005273
(61) Patent of Addition to Application Number :NA
Filing Date :NA
(62) Divisional to Application Number :NA
Filing Date :NA

(71)**Name of Applicant :**
1)SONY CORPORATION
Address of Applicant :1 7 1 Konan Minato ku Tokyo 1080075 Japan
(72)**Name of Inventor :**
1)KUBOTA Eiichiro
2)AVITABILE Antonio
3)MARIELLA Costantino
4)RUTHERFORD Christopher
5)COLBY Edward
6)BAILEY Nicholas
7)KNILL Alexander
8)MEHTA Harshul

(57) Abstract :
I n the disclosed device, the supply pow er t o an electricity storage device i s controlled on the basis 丶o f the carbon emission rate o r power fees. A battery center (13) that configures the electricity storage device (1 1) wirelessly communicates with a household gateway (4), and i s controlled b y the gateway (4). The gateway (4) collects measured values o f the power consumption o f elec tric appliances i n the household, and determines the car bon emission rate in real time. A solar panel (9) i s provid ed, and the batteries o f the electricity storage device 、 1 1) are charged b y the solar panel output. The batteries are also charged b y D C power obtained fixim external power. Power i s stored in the electricity storage device (1 1) o n the basis o f the carbon emission rate b y means o f charging control.

No. of Pages : 36 No. of Claims : 17

(12) PATENT APPLICATION PUBLICATION
(19) INDIA
(22) Date of filing of Application :03/01/2013
(21) Application No.73/DELNP/2013 A
(43) Publication Date : 05/09/2014

(54) Title of the invention : PHARMACEUTICAL COMPOSITION COMPRISING AMIDE DERIVATIVE OR PHARMACEUTICALLY ACCEPTABLE SALT THEREOF

(51) International classification	:C07D401/12,C07D401/14,A61K31/497
(31) Priority Document No	:1020100055549
(32) Priority Date	:11/06/2010
(33) Name of priority country	:Republic of Korea
(86) International Application No	:PCT/KR2011/004271
Filing Date	:10/06/2011
(87) International Publication No	:WO 2011/155793
(61) Patent of Addition to Application Number	:NA
Filing Date	:NA
(62) Divisional to Application Number	:NA
Filing Date	:NA

(71)**Name of Applicant :**
1)HANMI SCIENCE CO. LTD.
Address of Applicant :550 Dongtangiheung ro Dongtan myeon Hwaseong si Gyeonggi do 445 813 Republic of Korea
(72)**Name of Inventor :**
1)KIM Yong Il
2)KIM Kyeong Soo
3)JANG Ki Young
4)KIM Yo Han
5)PARK Jae Hyun
6)WOO Jong Soo

(57) Abstract :
The present invention relates to a pharmaceutical composition comprising an amide derivative or a pharmaceutically acceptable salt thereof, and an acidic additive. This composition, owing to improved stability even aRer a long-term storage, is suitable for inhibitiigth e growth of cancer cells.

No. of Pages : 21 No. of Claims : 16

(12) PATENT APPLICATION PUBLICATION
(19) INDIA
(22) Date of filing of Application :19/11/2012
(21) Application No.9987/DELNP/2012 A
(43) Publication Date : 05/09/2014

(54) Title of the invention : ABSORBENT PRODUCT COMPRISING A MIXTURE OF A CATIONIC POLYSACCHARIDE AND A HYDROPHILIC CARRIER MATRIX

(51) International classification :A61L15/22,A61L15/28,A61L15/60
(31) Priority Document No :10165680.9
(32) Priority Date :11/06/2010
(33) Name of priority country :EPO
(86) International Application No :PCT/US2011/038865
Filing Date :02/06/2011
(87) International Publication No :WO 2011/156197
(61) Patent of Addition to Application Number :NA
Filing Date :NA
(62) Divisional to Application Number :NA
Filing Date :NA

(71)**Name of Applicant :**
1)THE PROCTER & GAMBLE COMPANY
Address of Applicant :One Procter & Gamble Plaza Cincinnati Ohio 45202 U.S.A.
(72)**Name of Inventor :**
1)CARLUCCI Giovanni
2)GAGLIARDINI Alessandro Ludwig
3)DALESIO Nicola

(57) Abstract :
An absorbent product for feminine protection comprising a mixture of a cationic polysaccharide and a hydrophilic carrier matrix wherein the cationic polysaccharide is a water based cationic polysaccharide and / or has a degree of cationization of less than 3% by weight.

No. of Pages : 20 No. of Claims : 15

(12) PATENT APPLICATION PUBLICATION
(19) INDIA
(22) Date of filing of Application :19/11/2012
(21) Application No.9988/DELNP/2012 A
(43) Publication Date : 05/09/2014

(54) Title of the invention : SYSTEM AND METHOD FOR ALLOCATING TRANSMISSION RESOURCES

(51) International classification :H04L1/00,H04L5/00,H04L1/16
(31) Priority Document No :61/332867
(32) Priority Date :10/05/2010
(33) Name of priority country :U.S.A.
(86) International Application No :PCT/IB2011/052059
Filing Date :10/05/2011
(87) International Publication No :WO 2011/141874
(61) Patent of Addition to Application Number :NA
Filing Date :NA
(62) Divisional to Application Number :NA
Filing Date :NA

(71)**Name of Applicant :**
1)TELEFONAKTIEBOLAGET L M ERICSSON (PUBL)
Address of Applicant :16483 S 16483 Stockholm Sweden
(72)**Name of Inventor :**
1)HAMMARWALL David
2)J–NGREN George

(57) Abstract :
A METHOD FOR WIRELESSLY TRANSMITTING USER DATA AND AT LEAST A FIRST TYPE OF CONTROL INFORMATION USING A PLURALITY OF TRANSMISSION LAYERS INCLUDING ENCODING BITS OF A FIRST TYPE OF CONTROL INFORMATION TO FORM ONE OR MORE CONTROL CODEWORDS AND ENCODING BITS OF USER DATA TO FORM ONE OR MORE USER DATA CODEWORDS. THE METHOD ALSO INCLUDES GENERATING A PLURALITY OF VECTOR SYMBOLS BASED ON THE CONTROL CODEWORDS AND THE USER DATA CODEWORDS. BACH VECTOR SYMBOL INCLUDES A PLURALITY OF MODULATION SYMBOLS DUN ARE EACH ASSOCIATED WITH A TRANSMISSION LAYER OVER WHICH THE ASSOCIATED MODULATION SYMBOL WILL BE TRANSMITTED. GENERATING THE PLURALITY OF VECTOR SYMBOLS INCLUDES INTERLEAVING BITS OF THE ONE OR MORE CONTROL CODEWORDS AND BITS OF THE ONE OR MORE USER DATA CODEWORDS SO THAT THE FIRST TYPE OF CONTROL INFORMATION IS CARRIED IN MODULATION SYMBOLS ASSOCIATED WITH THE SAME TRANSMISSION LAYERS IN AIL THE VECTOR SYMBOLS TRANSMITTED DURING THE SUBFRAME THAT CARRY THE FIRST TYPE OF CONTROL INFORMATION, THE METHOD ALSO INCLUDES TRANSMITTING THE PLURALITY OF VECTOR SYMBOLS TO A RECEIVER OVER A PLURALITY OF TRANSMISSION LAYERS.

No. of Pages : 50 No. of Claims : 30

(12) PATENT APPLICATION PUBLICATION
(19) INDIA
(22) Date of filing of Application :19/11/2012
(21) Application No.9994/DELNP/2012 A
(43) Publication Date : 05/09/2014

(54) Title of the invention : METHOD AND DEVICE FOR CONTROLLING UPLINK POWER

(51) International classification :H04W52/12
(31) Priority Document No :201010194448.3
(32) Priority Date :04/06/2010
(33) Name of priority country :China
(86) International Application No :PCT/CN2010/078466
Filing Date :05/11/2010
(87) International Publication No :WO 2011/150628
(61) Patent of Addition to Application Number :NA
Filing Date :NA
(62) Divisional to Application Number :NA
Filing Date :NA

(71)**Name of Applicant :**
1)ZTE CORPORATION
Address of Applicant :ZTE Plaza Keji Road South Hi Tech Industrial Park Nanshan Shenzhen Guangdong 518057 China
(72)**Name of Inventor :**
1)LU Chenhong

(57) Abstract :
A method for controlling uplink power is provided. Said method includes the following steps: a target reception power parameter, a path loss compensation factor parameter and an enable deltaMCS parameter which for adjusting transmission power according to Modulation Coding Scheme (MCS) grade, which are corresponding to a reference service rate are configurated and transmitted to a terminal by a base station; a power margin is acquired by decreasing the target reception power and path loss compensation : from a limitation value of the terminal transmis sion power, then the MCS -grade which can b e used in the terminal is determined according to the power margin and transmitted to the terminal. A system for controlling uplink power is also provided. The configuration of the system is simple, which supports adaptive selection of suitable MCS -grade for a user equipment (UE), and performs accu racy and efficiency control of uplink power simultaneously

No. of Pages : 21 No. of Claims : 10

(12) PATENT APPLICATION PUBLICATION
(19) INDIA
(22) Date of filing of Application :19/11/2012
(21) Application No.9995/DELNP/2012 A
(43) Publication Date : 05/09/2014

(54) Title of the invention : TURBO MACHINERY STAGE FAMILIES TUNING/CALIBRATION SYSTEM AND METHOD

(51) International classification :G06F17/50
(31) Priority Document No :NA
(32) Priority Date :NA
(33) Name of priority country :NA
(86) International Application No :PCT/EP2010/058859
Filing Date :22/06/2010
(87) International Publication No :WO 2011/160685
(61) Patent of Addition to Application Number :NA
Filing Date :NA
(62) Divisional to Application Number :NA
Filing Date :NA

(71)**Name of Applicant :**
1)NUOVO PIGNONE S.p.A
Address of Applicant :Via Felice Matteucci 2 I 50127 Florence Italy
(72)**Name of Inventor :**
1)EL SHAMY Omar Mohamed
2)GHIZAWI Nidal Awni
3)GUENARD Denis Guillaume Jean
4)MICHELASSI Vittorio
5)SANKARAN Sivasubramaniyan
6)SVENSDOTTER Clary Susanne Ingeborg

(57) Abstract :
System and method for automatically determining a final set of tuning/calibration parameters for designing a new turbo machinery. The method includes inputing an initial set of tuning/calibration parameters; calculating family turbo machinery quantities based on the initial set of tuning/calibration parameters; comparing the calculated family turbo machinery quantities with measured quantities and calculating a first error between the calculated family quantities and the measured quantities; calculating a second error between the initial set of tuning/calibration parameters and default values of the turbo machine variables; forming a modified objective function that includes both the first and second errors; during an iterative process varying the initial set of tuning/calibration parameters in such a way that the final set of tuning/calibration parameters is found; and storing in a database the final set of tuning/calibration parameters for the family.

No. of Pages : 40 No. of Claims : 20

(12) PATENT APPLICATION PUBLICATION
(21) Application No.9996/DELNP/2012 A
(19) INDIA
(22) Date of filing of Application :19/11/2012
(43) Publication Date : 05/09/2014

(54) Title of the invention : STORABLE HOT WATER OR STEAM DELIVERY DEVICE

(51) International classification :A47J31/44
(31) Priority Document No :10163638.9
(32) Priority Date :21/05/2010
(33) Name of priority country :EPO
(86) International Application No :PCT/EP2011/058225
Filing Date :20/05/2011
(87) International Publication No :WO 2011/144722
(61) Patent of Addition to Application Number :NA
Filing Date :NA
(62) Divisional to Application Number :NA
Filing Date :NA

(71)**Name of Applicant :**
1)NESTEC S.A.
Address of Applicant :Av. Nestl 55 CH 1800 Vevey Switzerland
(72)**Name of Inventor :**
1)TURCHI Daniel
2)CAHEN Antoine

(57) Abstract :
A beverage preparation machine (1) has: a body (40) with an opening (41); and a hot water and/or steam generator that comprises a movable outlet (31). The generator and the outlet have an operative configuration for delivering via the outlet hot water and/or steam and a storage configuration in which the outlet (31) of the generator is moved and received in the opening (41) of the body.

No. of Pages : 18 No. of Claims : 15

(12) PATENT APPLICATION PUBLICATION
(19) INDIA
(22) Date of filing of Application :19/11/2012
(21) Application No.9997/DELNP/2012 A
(43) Publication Date : 05/09/2014

(54) Title of the invention : REMOTE CONTROLLED FOOD PROCESSOR

(51) International classification :A47J31/44
(31) Priority Document No :10163634.8
(32) Priority Date :21/05/2010
(33) Name of priority country :EPO
(86) International Application No :PCT/EP2011/058018
Filing Date :18/05/2011
(87) International Publication No :WO 2011/144647
(61) Patent of Addition to Application Number :NA
Filing Date :NA
(62) Divisional to Application Number :NA
Filing Date :NA

(71)**Name of Applicant :**
1)NESTEC S.A.
Address of Applicant :Av. Nestl 55 CH 1800 Vevey Switzerland
(72)**Name of Inventor :**
1)PIAI Guido
2)PROBST Christian
3)CAHEN Antoine
4)GRANGER Eric

(57) Abstract :
An apparatus (30) for conditioning a food substance such as milk or a milk containing substance comprises: a food conditioning module (31) that has a structure (32) for holding such food substance and that has an electric device (35) comprising a conditioner (36) for imparting a conditioning effect to such food substance and a conditioner control unit (37) for controlling the conditioner; and a user interface device (40) in data communication with the conditioner control unit to transmit user data from the user interface device to the control unit for controlling the conditioner accordingly. The user interface device (40) is external to the food conditioning module (31) and disconnectably connected thereto.

No. of Pages : 30 No. of Claims : 15

(12) PATENT APPLICATION PUBLICATION
(19) INDIA
(22) Date of filing of Application :03/01/2013
(21) Application No.69/DELNP/2013 A
(43) Publication Date : 05/09/2014

(54) Title of the invention : A PERSONAL CARE COMPOSITION COMPRISING A NEAR TERMINAL BRANCHED COMPOUND

(51) International classification :A61K8/37
(31) Priority Document No :61/364519
(32) Priority Date :15/07/2010
(33) Name of priority country :U.S.A.
(86) International Application No :PCT/US2011/043990
Filing Date :14/07/2011
(87) International Publication No :WO 2012/009523
(61) Patent of Addition to Application Number :NA
Filing Date :NA
(62) Divisional to Application Number :NA
Filing Date :NA

(71)**Name of Applicant :**
1)THE PROCTER & GAMBLE COMPANY
Address of Applicant :One Procter & Gamble Plaza Cincinnati Ohio 45202 U.S.A.
(72)**Name of Inventor :**
1)CARTER John
2)BURT Elaine
3)SCHEIBEL Jeffrey John
4)KITKO David Johnathan
5)XU Jun
6)SAUNDERS Charles Winston
7)PRICE Kenneth Nathan
8)URBIN Stephanie Ann
9)GREEN Phillip Richard

(57) Abstract :
A personal care composition comprising: a near terminal branched compound according to Formula I; a cosmetically acceptable aqueous carrier; wherein the near terminal branched compound is not comprised in a gel network.

No. of Pages : 29 No. of Claims : 15

(12) PATENT APPLICATION PUBLICATION
(21) Application No.10374/DELNP/2012 A
(19) INDIA
(22) Date of filing of Application :29/11/2012
(43) Publication Date : 05/09/2014

(54) Title of the invention : METHODS AND ARRANGEMENTS FOR REDUCING THE SIGNALLING OVERHEAD IN A WIRELESS COMMUNICATION SYSTEM USING CARRIER AGGREGATION

(51) International classification :H04W28/06
(31) Priority Document No :61/359104
(32) Priority Date :28/06/2010
(33) Name of priority country :U.S.A.
(86) International Application No :PCT/SE2011/050817
Filing Date :21/06/2011
(87) International Publication No :WO 2012/002881
(61) Patent of Addition to Application Number :NA
Filing Date :NA
(62) Divisional to Application Number :NA
Filing Date :NA

(71)**Name of Applicant :**
1)TELEFONAKTIEBOLAGET L M ERICSSON (PUBL)
Address of Applicant :S 164 83 Stockholm Sweden
(72)**Name of Inventor :**
1)LARSSON Daniel
2)BALDEMAIR Robert
3)GERSTENBERGER Dirk

(57) Abstract :
Particular embodiments provide a method in a mobile terminal (610) for processing downlink control information. The mobile terminal (610) is capable of receiving multiple component carriers. According to the method the mobile terminal (610) receives (710) downlink control information on a component carrier the downlink control information comprising a bit field allocated for a transmit power control TPC command. If the bit field comprises one or more bits that are not used for a TPC command the mobile terminal (610) interprets (730) the meaning of the bits not used for a TPC command depending on the ACK/NACK feedback mode the mobile terminal (610) is configured with.

No. of Pages : 39 No. of Claims : 30

(12) PATENT APPLICATION PUBLICATION
(21) Application No.115/DELNP/2013 A
(19) INDIA
(22) Date of filing of Application :04/01/2013
(43) Publication Date : 05/09/2014

(54) Title of the invention : DISPOSABLE CONNECTOR FOR HEMOFILTRATION

(51) International classification :A61M39/06,A61M39/10
(31) Priority Document No :10168559.2
(32) Priority Date :06/07/2010
(33) Name of priority country :EPO
(86) International Application No :PCT/EP2011/060314
Filing Date :21/06/2011
(87) International Publication No :WO 2012/004123
(61) Patent of Addition to Application Number :NA
Filing Date :NA
(62) Divisional to Application Number :NA
Filing Date :NA

(71)**Name of Applicant :**
1)FRESENIUS MEDICAL CARE DEUTSCHLAND GMBH
Address of Applicant :Else Kroener Strasse 1 61352 Bad Homburg Germany
(72)**Name of Inventor :**
1)REITER Reinhold
2)FINI Massimo
3)VAIANO Andrea

(57) Abstract :
The present invention refers to a disposable connector 20 suitable for engagement on the substitution port 180 of a hemo filtration machine 18. The connector 20 comprises: a rigid main body 22 defining a duct 220; and a soft element 24 fitted on an end of the main body 22. In the connector 20 according to the invention the soft element 24 comprises a membrane 240 occluding the duct 220 and performing a valve function; and a seal portion 242 radially expanding outward of the duct 220.

No. of Pages : 19 No. of Claims : 16

(12) PATENT APPLICATION PUBLICATION
(19) INDIA
(22) Date of filing of Application :04/01/2013
(21) Application No.135/DELNP/2013 A
(43) Publication Date : 05/09/2014

(54) Title of the invention : NOVEL MICROBIOCIDAL DIOXIME ETHER DERIVATIVES

(51) International classification :C07D215/40,C07D401/12,C07D401/14
(31) Priority Document No :10171257.8
(32) Priority Date :29/07/2010
(33) Name of priority country :EPO
(86) International Application No :PCT/EP2011/063018
Filing Date :28/07/2011
(87) International Publication No :WO 2012/013754
(61) Patent of Addition to Application Number :NA
Filing Date :NA
(62) Divisional to Application Number :NA
Filing Date :NA

(71)**Name of Applicant :**
1)SYNGENTA PARTICIPATIONS AG
Address of Applicant :Schwarzwaldallee 215 CH 4058 Basel Switzerland
(72)**Name of Inventor :**
1)STIERLI Daniel
2)NEBEL Kurt
3)ZAMBACH Werner
4)BORTOLATO Andrea

(57) Abstract :
The present invention provides compounds of formula (I) wherein G1 G2 G3 G4 G5 G6 Y1 Y2 Y3 Y4 Y5 and Y6 and p and q are as defined in the claims. The invention further relates to compositions which comprise these compounds and to their use in agriculture or horticulture for controlling or preventing infestation of plants by phytopathogenic microorganisms preferably fungi.

No. of Pages : 172 No. of Claims : 15

(12) PATENT APPLICATION PUBLICATION
(19) INDIA
(22) Date of filing of Application :03/01/2013
(21) Application No.86/DELNP/2013 A
(43) Publication Date : 05/09/2014

(54) Title of the invention : EXHAUST GAS TREATMENT SYSTEM INCLUDING A THERMOELECTRIC GENERATOR

(51) International classification :F01N13/00,B01D53/94,F01N5/02
(31) Priority Document No :61/356870
(32) Priority Date :21/06/2010
(33) Name of priority country :U.S.A.
(86) International Application No :PCT/US2011/041034
Filing Date :20/06/2011
(87) International Publication No :WO 2011/163109
(61) Patent of Addition to Application Number :NA
Filing Date :NA
(62) Divisional to Application Number :NA
Filing Date :NA

(71)**Name of Applicant :**
1)CORNING INCORPORATED
Address of Applicant :1 Riverfront Plaza Corning New York 14831 U.S.A.
(72)**Name of Inventor :**
1)BACKHAUS RICOULT Monika
2)CHEN Peng
3)SOULLIERE Mark J.

(57) Abstract :
An after treatment device for an automotive engine includes a substrate having a thermoelectric generation element disposed in an interior volume thereof. The substrate has a first end a second end and an outermost lateral dimension that defines an interior volume and is configured to flow engine exhaust gas from the first end to the second end such that the flowing exhaust gas is in thermal contact with the thermoelectric generation element.

No. of Pages : 44 No. of Claims : 25

(12) PATENT APPLICATION PUBLICATION
(19) INDIA
(22) Date of filing of Application :03/01/2013
(21) Application No.93/DELNP/2013 A
(43) Publication Date : 05/09/2014

(54) Title of the invention : LUBRICATION PROCESSES FOR ENHANCED FORGEABILITY

(51) International classification :B21C23/32,B21J3/00
(31) Priority Document No :12/814591
(32) Priority Date :14/06/2010
(33) Name of priority country :U.S.A.
(86) International Application No :PCT/US2011/036571
Filing Date :16/05/2011
(87) International Publication No :WO 2011/159413
(61) Patent of Addition to Application Number :NA
Filing Date :NA
(62) Divisional to Application Number :NA
Filing Date :NA

(71)**Name of Applicant :**
1)ATI PROPERTIES INC.
Address of Applicant :1600 N.E. Old Salem Road Albany Oregon 97321 U.S.A.
(72)**Name of Inventor :**
1)OPPENHEIMER Scott
2)FORBES JONES Robin M.
3)MANTIONE John
4)MINISANDRAM Ramesh
5)THOMAS Jean Philippe

(57) Abstract :
Forge lubrication processes are disclosed. A solid lubricant (38) sheet is placed between a workpiece (30) and a die (34; 36) in a forging apparatus. Force is applied to the workpiece (30) with the die (34; 36) to plastically deform the workpiece. The solid lubricant sheet (38) decreases the shear factor for the forging system and reduces the incidence of die locking.

No. of Pages : 49 No. of Claims : 24

(12) PATENT APPLICATION PUBLICATION
(19) INDIA
(22) Date of filing of Application :16/11/2012
(21) Application No.9948/DELNP/2012 A
(43) Publication Date : 05/09/2014

(54) Title of the invention : PRE TREATMENT COMPOSITION

(51) International classification :B41M5/50,B41M5/00
(31) Priority Document No :PCT/US2010/038562
(32) Priority Date :14/06/2010
(33) Name of priority country :U.S.A.
(86) International Application No :PCT/US2011/025802
Filing Date :23/02/2011
(87) International Publication No :WO 2011/159371
(61) Patent of Addition to Application Number :NA
Filing Date :NA
(62) Divisional to Application Number :NA
Filing Date :NA

(71)**Name of Applicant :**
1)HEWLETT PACKARD DEVELOPMENT COMPANY L.P.
Address of Applicant :11445 Compaq Center Drive W. Houston Texas 77070 U.S.A.
(72)**Name of Inventor :**
1)SARKISIAN George
2)EMAMJOMEH Ali
3)VISNYAK Elizabeth Ann

(57) Abstract :
PRE-TREATMENT COMPOSITION AND PRINTING METHOD FOR PRINTING DURABLE IMAGES USING SUCH PRE-TREATMENT COMPOSITION ARE DISCLOSED. A DISCLOSED EXAMPLE OF THE PRE-TREATMENT COMPOSITION INCLUDES A LIQUID VEHICLE, A POLYVALENT METAL SALT, A LATEX RESIN AND THICKENER. MOREOVER, A PRINTING METHOD IS ALSO DISCLOSED WITH AN INK COMPOSITION COMPRISING OF AN AQUEOUS LIQUID VEHICLE AND A COLORANT AFTER PRE-TREATMENT WITH SAID PRE-TREATMENT COMPOSITION.

No. of Pages : 26 No. of Claims : 15

(12) PATENT APPLICATION PUBLICATION
(19) INDIA
(22) Date of filing of Application :03/01/2013
(21) Application No.63/DELNP/2013 A
(43) Publication Date : 05/09/2014

(54) Title of the invention : METHOD OF PREPARING LIQUID MIXTURES

(51) International classification :G05D11/08,B01F15/04,G01N30/34
(31) Priority Document No :10506681
(32) Priority Date :23/06/2010
(33) Name of priority country :Sweden
(86) International Application No :PCT/SE2011/050563
Filing Date :05/05/2011
(87) International Publication No :WO 2011/162666
(61) Patent of Addition to Application Number :NA
Filing Date :NA
(62) Divisional to Application Number :NA
Filing Date :NA

(71)**Name of Applicant :**
1)GE HEALTHCARE BIO SCIENCES AB
Address of Applicant :Patent Department Bjrkgatan 30 S 751 84 Uppsala Sweden
(72)**Name of Inventor :**
1)ANDREI Catalin
2)BERG Mikael
3)BLANK Torbjrn
4)CARREDANO Enrique
5)EKSTR–M Karl
6)KARLSSON Tomas M.
7)LYNG… Jan Erik
8)NORDBERG Roger
9)RODRIGO Gustav
10)SANDEGREN Henrik

(57) Abstract :
A method of preparing a mixed liquid flow having predetermined characteristics including a predetermined value of a first property and a predetermined value of a second property comprising the steps of: a) providing a first set of at least one liquid flow each having a different first value of the first property; b) providing a second set of at least one liquid flow each having a different second value of the first property; c) providing a third set of at least one liquid flow of solvent; d) combining the provided liquid flows; and e)varying at least one of the liquid flows of the first and second sets and at least one liquid flow of the third set to adjust the first property and the second property to their respective predetermined values in the resulting mixed liquid flow.

No. of Pages : 31 No. of Claims : 35

(12) PATENT APPLICATION PUBLICATION
(19) INDIA
(22) Date of filing of Application :03/01/2013
(21) Application No.88/DELNP/2013 A
(43) Publication Date : 05/09/2014

(54) Title of the invention : MOTORIZED CARRIAGE FOR A CURTAIN AND CONCEALMENT FACILITY COMPRISING SUCH A CARRIAGE

(51) International classification :A47H5/02
(31) Priority Document No :10 55472
(32) Priority Date :06/07/2010
(33) Name of priority country :France
(86) International Application No :PCT/FR2011/051606
Filing Date :06/07/2011
(87) International Publication No :WO 2012/004530
(61) Patent of Addition to Application Number :NA
Filing Date :NA
(62) Divisional to Application Number :NA
Filing Date :NA

(71)**Name of Applicant :**
1)SOMFY SAS
Address of Applicant :50 Avenue du Nouveau Monde F 74300 Cluses France
(72)**Name of Inventor :**
1)CAVAREC Pierre Emmanuel
2)LEMAITRE Sbastien
3)SOURAIN Rmi

(57) Abstract :
This motorized carriage (100b) for opening/closing a screen moves along a rail (50) by means of a friction wheel (140b) that is rotated by a motor and is in contact with at least one running surface (53,54) of the rail. The contact force (FT) between the friction wheel (140b) and the running surface can be regulated by a presser means (164b) that enables the contact force (FT) to be varied according to a rsistive force (RT) that dpends on the load pulled or pushed by the carriage (100b) as it moves (Fi).

No. of Pages : 20 No. of Claims : 10

(12) PATENT APPLICATION PUBLICATION
(19) INDIA
(22) Date of filing of Application :19/11/2012
(21) Application No.9989/DELNP/2012 A
(43) Publication Date : 05/09/2014

(54) Title of the invention : COMBINATION SHAVING AND TRIMMING DEVICE

(51) International classification :B26B19/38
(31) Priority Document No :12/816,712
(32) Priority Date :16/06/2010
(33) Name of priority country :U.S.A.
(86) International Application No :PCT/US2011/040511
Filing Date :15/06/2011
(87) International Publication No :WO 2011/159790
(61) Patent of Addition to Application Number :NA
Filing Date :NA
(62) Divisional to Application Number :NA
Filing Date :NA

(71)**Name of Applicant :**
1)THE GILLETTE COMPANY
Address of Applicant :World Shaving Headquarters IP/Legal Patent Department 3E One Gillette Park Boston Massachusetts 02127 U.S.A.
(72)**Name of Inventor :**
1)REHBEIN Stefan
2)SALOMEZ Nicolas
3)PEREZ LOPEZ Cirilio Javier
4)ROENNEBERG Gerrit

(57) Abstract :
A combination shaving and trimming device includes a handle having an upper end and lower end a powered trimmer disposed adjacent the upper end a wet shaving razor attachment adapted for mounting over the trimmer onto the upper end of the handle. The combination shaving and trimming device includes alignment guides providing one way attachment of the wet shaving razor attachment to the trimmer.

No. of Pages : 32 No. of Claims : 15

(12) PATENT APPLICATION PUBLICATION
(19) INDIA
(22) Date of filing of Application :01/01/2013
(21) Application No.16/DELNP/2013 A
(43) Publication Date : 05/09/2014

(54) Title of the invention : SIMULATING AND TESTING AVIONICS

(51) International classification :G06F11/36
(31) Priority Document No :NA
(32) Priority Date :NA
(33) Name of priority country :NA
(86) International Application No :PCT/SE2010/050786
Filing Date :06/07/2010
(87) International Publication No :WO 2012/005639
(61) Patent of Addition to Application Number :NA
Filing Date :NA
(62) Divisional to Application Number :NA
Filing Date :NA

(71)**Name of Applicant :**
1)SAAB AB
Address of Applicant :S 581 88 Linkping Sweden
(72)**Name of Inventor :**
1)DANIELSSON Torkel
2)PETTERSSON Anders

(57) Abstract :
The present invention relates to an avionics application host system and method for simulating and/or testing a number of partitioned applications (Al A4) arranged to be periodically executed on a target system wherein the target system is a distributed avionics control system of an aerial vehicle (1). The host system comprises a number of functional modules. The number of functional modules comprises: an application module (146) arranged to import said number of partitioned applications (A1 A4) in un modified form a configuration module (145) arranged to configure the operations of the host system at least one communication module (142) arranged to provide communication between the partitioned applications a control module (140) arranged to provide coordinated execution time to the functional modules a service module (150) associated to each imported partitioned application (A1 A4) arranged to provide services to the imported partitioned applications (A1 A4) so as to enable execution of the imported partitioned applications (A1 A4) and to preserve the temporal order of events related to communication and execution.

No. of Pages : 56 No. of Claims : 15

(12) PATENT APPLICATION PUBLICATION
(19) INDIA
(22) Date of filing of Application :02/01/2013
(21) Application No.45/DELNP/2013 A
(43) Publication Date : 05/09/2014

(54) Title of the invention : TACKY FINISH AND TEXTILE MATERIALS AND ARTICLES TREATED THEREWITH

(51) International classification :C08L61/12,B60C9/00,C08G61/12
(31) Priority Document No :61/354853
(32) Priority Date :15/06/2010
(33) Name of priority country :U.S.A.
(86) International Application No :PCT/US2011/001069
Filing Date :14/06/2011
(87) International Publication No :WO 2012/005751
(61) Patent of Addition to Application Number :NA
Filing Date :NA
(62) Divisional to Application Number :NA
Filing Date :NA

(71)**Name of Applicant :**
1)MILLIKEN & COMPANY
Address of Applicant :920 Milliken Road M 495 Spartanburg South Carolina 29303 U.S.A.
(72)**Name of Inventor :**
1)MICHIELS Dany
2)LI Shulong
3)CHRISTIAENS Sofie

(57) Abstract :
This invention relates to tacky finishes and to the textile materials and articles treated with the tacky finishes. The tacky finishes provide improved processing features for end use articles that contain such finishes. The tacky finish may be combined with other adhesion promotion finishes in the treatment of textile materials. The textile materials and articles may be used as rubber reinforcing materials such as automotive tire cap ply single end tire cord carcass reinforcement and side wall reinforcement. End use articles that contain the treated textile materials include rubber containing materials such as automobile tires belts and hoses. This invention also relates to the methods for manufacturing the treated textile materials and articles.

No. of Pages : 81 No. of Claims : 40

(12) PATENT APPLICATION PUBLICATION
(19) INDIA
(22) Date of filing of Application :03/01/2013
(21) Application No.58/DELNP/2013 A
(43) Publication Date : 05/09/2014

(54) Title of the invention : PRODUCT DISPENSING DEVICE COMPRISING A PUMP AND A DISPENSING END PIECE

(51) International classification :B05B11/00
(31) Priority Document No :1054608
(32) Priority Date :10/06/2010
(33) Name of priority country :France
(86) International Application No :PCT/FR2011/051318
Filing Date :09/06/2011
(87) International Publication No :WO 2011/154663
(61) Patent of Addition to Application Number :NA
Filing Date :NA
(62) Divisional to Application Number :NA
Filing Date :NA

(71)**Name of Applicant :**
1)REXAM HEALTHCARE LA VERPILLIERE
Address of Applicant :20 avenue de la Gare F 38290 La Verpilli¨re France
(72)**Name of Inventor :**
1)DONNETTE Xavier
2)CAMBA Jos
3)SAHM Philippe

(57) Abstract :
The product dispensing device (10) is added to the neck (14) of a container (12) and comprises: a pump (16) comprising a metering chamber closed by a first needle valve forming a nonreturn valve; a dispensing end pi¨ce (18) added to the pump and comprising a second needle valve (66) forming a nonreturn valve and a bearing surface on which a user can press to activate the device; a cap (20) for protecting the device; a clamping collar (22) bearing the cap; and a member (24) for fixing the device on the neck (14) of the container, said member comprising means (88) for attaching the member around the neck, that can be activated by sliding the collar (22) with respect to the fixing member (24) from a pre-assembly configuration to an assembly configuration, an inner ring (80) for centring the pump on the container, and an outer ring (82) carrying means (84) for securing the dispensing end pi¨ce.

No. of Pages : 15 No. of Claims : 9

(12) PATENT APPLICATION PUBLICATION
(19) INDIA
(22) Date of filing of Application :03/01/2013
(21) Application No.67/DELNP/2013 A
(43) Publication Date : 05/09/2014

(54) Title of the invention : METHODS FOR MANUFACTURING TETRANOR PROSTAGLANDIN D J E A AND F METABOLITES

(51) International classification :C07C405/00,C07C51/347,C07C59/82
(31) Priority Document No :61/354489
(32) Priority Date :14/06/2010
(33) Name of priority country :U.S.A.
(86) International Application No :PCT/US2011/040408
Filing Date :14/06/2011
(87) International Publication No :WO 2011/159740
(61) Patent of Addition to Application Number :NA
Filing Date :NA
(62) Divisional to Application Number :NA
Filing Date :NA

(71)**Name of Applicant :**
1)CAYMAN CHEMICAL COMPANY INCORPORATED
Address of Applicant :1180 E. Ellsworth Road Ann Arbor Michigan 48108 U.S.A.
(72)**Name of Inventor :**
1)ENDRES Gregory W.
2)KORNILOV Andriy M.
3)UZIEBLO Adam

(57) Abstract :
The present invention generally relates to synthetic methods for preparing tetranor prostaglandin D J E A and F metabolites.

No. of Pages : 86 No. of Claims : 15

(12) PATENT APPLICATION PUBLICATION
(21) Application No.82/DELNP/2013 A
(19) INDIA
(22) Date of filing of Application :03/01/2013
(43) Publication Date : 05/09/2014

(54) Title of the invention : WASTEWATER TREATMENT APPARATUS USING HIGH EFFICIENT AND STABLE BIO DOUBLING PROCESS

(51) International classification :C02F3/30
(31) Priority Document No :201010209981.2
(32) Priority Date :22/06/2010
(33) Name of priority country :China
(86) International Application No :PCT/CN2011/072832
Filing Date :15/04/2011
(87) International Publication No :WO 2011/160486
(61) Patent of Addition to Application Number :NA
Filing Date :NA
(62) Divisional to Application Number :NA
Filing Date :NA

(71)**Name of Applicant :**
1)LINGZHI ENVIRONMENTAL CO. LTD.
Address of Applicant :Nanxin East Road Heqiao Town Yixing Jiangsu 214215 China
(72)**Name of Inventor :**
1)LING Jianjun
2)ZHAO Dongxia

(57) Abstract :
An improved wastewater treatment plant using the Bio-dopp process is provided, which is characterized in that the aeration aerobic area is designed as a ring ditch. The ring ditch has water propulsion units inside, and an admitting and mixing reaction area, a water elevating area, and a deposition area are disposed in the inner side thereof, and is communicated with the deposition area and the admitting and mixing e reaction area respectively. Such a structure of tanks solves the contradiction between the low OD and high sludge content which are required by the Bio-dopp process and ensures low OD and- high sludge content, thus and ensuring the actual effect and exertion of competitive advantages of the Bio-dopp process. In the treatment, two or more circulations are formed, which not only facilitates the equipment maintenance without shutting ,down the whole system, but also providing high and adjustable reflux ratio. The adjustability of the practical operating is further improved by the controllable gates or valves added between the water elevating area and the ring ditch, which can be flexibly added or start or stop the aeration units according to the quality of water to be treated during or after construction, the gates and valves, so the system @ has good application scalability and adaptability.

No. of Pages : 33 No. of Claims : 15

(12) PATENT APPLICATION PUBLICATION
(19) INDIA
(22) Date of filing of Application :03/01/2013
(21) Application No.78/DELNP/2013 A
(43) Publication Date : 05/09/2014

(54) Title of the invention : SECOND GENERATION HAND HELD OPTICAL IMAGER

(51) International classification :A61B6/00,G06T1/00,G06T17/20
(31) Priority Document No :61/354130
(32) Priority Date :11/06/2010
(33) Name of priority country :U.S.A.
(86) International Application No :PCT/US2011/040184
Filing Date :13/06/2011
(87) International Publication No :WO 2011/156810
(61) Patent of Addition to Application Number :NA
Filing Date :NA
(62) Divisional to Application Number :NA
Filing Date :NA

(71)**Name of Applicant :**
1)THE FLORIDA INTERNATIONAL UNIVERSITY BOARD OF TRUSTEES
Address of Applicant :University Park PC511 Miami FL 33199 U.S.A.
(72)**Name of Inventor :**
1)GODAVARTY Anuradha
2)DECERCE Joseph
3)MARTINEZ Sergio L.
4)ROCHE Rigoberto J.

(57) Abstract :
A method apparatus and system acquire data to create a 3D mesh representing a 3D object. The method apparatus and system acquire image data of the 3D object using two probes of an imaging system. The flexible probes conform to the shape of the 3D object illuminate the object at a face of each probe head via optical fibers coupled to an illumination system and receive at the surface of the 3D object via optical fibers coupled to a detection system light reflected from and/or transmitted through the 3D object. The reflectance and transillumination image data collected by the detection system are co registered with the previously acquired 3D mesh using data from a tracking system monitoring the position of each probe displayed in real time and optionally saved.

No. of Pages : 94 No. of Claims : 48

(12) PATENT APPLICATION PUBLICATION
(19) INDIA
(22) Date of filing of Application :03/01/2013
(21) Application No.77/DELNP/2013 A
(43) Publication Date : 05/09/2014

(54) Title of the invention : DEVICE FOR DISPENSING A FLUID PRODUCT

(51) International classification :A61M15/00
(31) Priority Document No :1055527
(32) Priority Date :07/07/2010
(33) Name of priority country :France
(86) International Application No :PCT/FR2011/051576
Filing Date :05/07/2011
(87) International Publication No :WO 2012/004509
(61) Patent of Addition to Application Number :NA
Filing Date :NA
(62) Divisional to Application Number :NA
Filing Date :NA

(71)**Name of Applicant :**
1)APTAR FRANCE SAS
Address of Applicant :Lieudit le Prieur F 27110 Le Neubourg France
(72)**Name of Inventor :**
1)KIRNIAK Maxime

(57) Abstract :
The invention relates to a device for dispensing a fluid product, comprising a lid lment (12) that is movable between closed and 1000 open positions; a strip of blister packs; a means for opening the blister packs; a first means for moving said blister packs, comprising an indexing wheel (40), and a second means (90) for moving said blister packs, pivotable between non-dispensing and dispensing positions, said indexing wheel (40) being rotatably mounted on said second movement means; an arming member (800) for urging said second movement means toward said dispensing position, said arming member being loaded by compressing a spring (50) by opening said lid; a locking means (30) for holding said second movement means in non-dispensing position; a triggering means (60) actuated by the inhalation of the user in order to release said locking means; a sliding carriage (1000) capable of moving between non-indexing and indexing positions, comprising an actuator (1010) engaging with said indexing wheel (40) in order to rotate said wheel when said carriage moves toward the non-indexing position thereof; a securing means (900) which is only activated during inhalation, and which secures said carriage (1000) to said lid (12) in order to move said carriage toward the indexing position thereof when said at least one lid lment is returned toward the closed position thereof, and for moving said carriage toward the non-indexing position thereof when said at least one lid lment is returned toward the oo open position thereof.

No. of Pages : 23 No. of Claims : 4

(12) PATENT APPLICATION PUBLICATION
(19) INDIA
(22) Date of filing of Application :03/01/2013
(21) Application No.80/DELNP/2013 A
(43) Publication Date : 05/09/2014

(54) Title of the invention : VEHICLE CONTROL SYSTEM

(51) International classification :B60K6/445,B60W20/00,B60W10/06
(31) Priority Document No :2010207210
(32) Priority Date :15/09/2010
(33) Name of priority country :Japan
(86) International Application No :PCT/IB2011/002128
Filing Date :14/09/2011
(87) International Publication No :WO 2012/035405
(61) Patent of Addition to Application Number :NA
Filing Date :NA
(62) Divisional to Application Number :NA
Filing Date :NA

(71)**Name of Applicant :**
1)TOYOTA JIDOSHA KABUSHIKI KAISHA
Address of Applicant :1 Toyota cho Toyota shi Aichi ken 471 8571 Japan
(72)**Name of Inventor :**
1)TAKEUCHI Keisuke
2)TANAHASHI Toshio
3)AGATA Yoshimitsu
4)KOIBUCHI Ken
5)ITABASHI Kaiji
6)NOUMURA Shin

(57) Abstract :
A vehicle control system includes: a controller (28) that configured to obtain an index on the basis of a running condition of a vehicle and that configured to vary a running characteristic of the vehicle on the basis of the index, wherein the controller (28) is configured to relatively delay a variation in the index in response to a variation in the running condition when the variation in the index decreases quickness of a behavior of the vehicle as compared with when the variation in the index increases the quickness of the behavior of the vehicle, and to correct the running characteristic on the basis of the index so that energy efficiency of a driving force source of the vehicle varies within a predetermined range depending on control over power output from the driving force source.

No. of Pages : 54 No. of Claims : 8

(12) PATENT APPLICATION PUBLICATION
(21) Application No.90/DELNP/2013 A
(19) INDIA
(22) Date of filing of Application :03/01/2013
(43) Publication Date : 05/09/2014

(54) Title of the invention : SYSTEM FOR PRODUCING A PACKAGED ITEM WITH AN IDENTIFIER

(51) International classification :G06F17/00
(31) Priority Document No :61/354637
(32) Priority Date :14/06/2010
(33) Name of priority country :U.S.A.
(86) International Application No :PCT/US2011/001064
Filing Date :10/06/2011
(87) International Publication No :WO 2011/159339
(61) Patent of Addition to Application Number :NA
Filing Date :NA
(62) Divisional to Application Number :NA
Filing Date :NA

(71)**Name of Applicant :**
1)TRUTAG TECHNOLOGIES INC.
Address of Applicant :1946 Young Street Suite 288 Honolulu HI 96826 U.S.A.
(72)**Name of Inventor :**
1)PEARSON Peter
2)ZHOU Ting
3)LEARMONTH Timothy
4)ONEILL Michael P.

(57) Abstract :
A system for packaging an item with an identifier comprises an identifier adder a labeler and a packager. The identifier adder adds one or more types of silica based tags to an item wherein each type of silica based tag has a first signature readable using an optical spectroscopic reader. A label is generated based at least in part on reading the one or more types of silica based tags of the item using the optical spectroscopic reader. The label includes goods info. The packager includes the label on a package and wherein the packager includes the item in the package.

No. of Pages : 24 No. of Claims : 27

(12) PATENT APPLICATION PUBLICATION
(19) INDIA
(22) Date of filing of Application :03/01/2013
(21) Application No.66/DELNP/2013 A
(43) Publication Date : 05/09/2014

(54) Title of the invention : THIOACETATE COMPOUNDS COMPOSITIONS AND METHODS OF USE

(51) International classification :C07D213/70,C07D401/04,C07D241/18
(31) Priority Document No :61/355491
(32) Priority Date :16/06/2010
(33) Name of priority country :U.S.A.
(86) International Application No :PCT/US2011/040585
Filing Date :15/06/2011
(87) International Publication No :WO 2011/159839
(61) Patent of Addition to Application Number :NA
Filing Date :NA
(62) Divisional to Application Number :NA
Filing Date :NA

(71)**Name of Applicant :**
1)ARDEA BIOSCIENCES INC.
Address of Applicant :4939 Directors Place San Diego CA 92121 U.S.A.
(72)**Name of Inventor :**
1)OUK Samedy
2)VERNIER Jean michel
3)GUNIC Esmir
4)CHEN Chixu

(57) Abstract :
Described herein are compounds useful in the modulation of blood uric acid levels formulations containing them and methods of using them. In some embodiments the compounds described herein are used in the treatment or prevention of disorders related to aberrant levels of uric acid.

No. of Pages : 134 No. of Claims : 36

(12) PATENT APPLICATION PUBLICATION
(19) INDIA
(22) Date of filing of Application :03/01/2013
(21) Application No.72/DELNP/2013 A
(43) Publication Date : 05/09/2014

(54) Title of the invention : USE OF ANTIBODIES AGAINST ICAM 1 IN THE TREATMENT OF PATIENTS WITH RELAPSED CANCER

(51) International classification :C07K16/28
(31) Priority Document No :1011771.1
(32) Priority Date :13/07/2010
(33) Name of priority country :U.K.
(86) International Application No :PCT/EP2011/061983
Filing Date :13/07/2011
(87) International Publication No :WO 2012/007516
(61) Patent of Addition to Application Number :NA
Filing Date :NA
(62) Divisional to Application Number :NA
Filing Date :NA

(71)**Name of Applicant :**
1)BIOINVENT INTERNATIONAL AB
Address of Applicant :Slvegatan 41 S 223 70 Lund Sweden
(72)**Name of Inventor :**
1)HANSSON Markus
2)FRENDEUS Bjrn

(57) Abstract :
There is provided antibodies or antigen binding fragments thereof with binding specificity for ICAM 1 for use in the treatment of cancer in patients who have previously been treated for cancer and either not responded to said treatment or have previously responded to said treatment and subsequently relapsed.

No. of Pages : 98 No. of Claims : 25

(12) PATENT APPLICATION PUBLICATION
(19) INDIA
(22) Date of filing of Application :03/01/2013
(21) Application No.87/DELNP/2013 A
(43) Publication Date : 05/09/2014

(54) Title of the invention : SALES TABLE

(51) International classification :A47F5/13
(31) Priority Document No :20 2010 007 893.8
(32) Priority Date :11/06/2010
(33) Name of priority country :Germany
(86) International Application No :PCT/EP2011/002841
Filing Date :09/06/2011
(87) International Publication No :WO 2011/154145
(61) Patent of Addition to Application Number :NA
Filing Date :NA
(62) Divisional to Application Number :NA
Filing Date :NA

(71)**Name of Applicant :**
1)TEGOMETALL INTERNATIONAL AG
Address of Applicant :Industriestrae CH 8574 Lengwill Switzerland
(72)**Name of Inventor :**
1)BOHNACKER Ulrich

(57) Abstract :
The sales table comprises a product receiving area (4) for receiving products as well as four legs (1) and a base (7) for supporting the products in the product receiving area. Four side walls (5) for laterally delimiting the product recei ving area are fastened to the legs. At least one of the side walls (5) has a bent area (19) directed downward li e a hook which can be hooked from above in a recess (17) at the upper end of at least one of the legs (1). The side wall (5) or a part (13) thereof can be unhooked from the recess (17) and folded away by means of a simple hand movement, and the sales table can be completely disassembled or reassembled by means of only a few more hand movements. Thus the recess (17) and the bent area (19) are robust components of the ta ble which are simple to produce, provide a stable and rigid connection between the side walls and the legs (1), and enable easy handling of the table.

No. of Pages : 11 No. of Claims : 7

(12) PATENT APPLICATION PUBLICATION
(19) INDIA
(22) Date of filing of Application :03/01/2013
(21) Application No.61/DELNP/2013 A
(43) Publication Date : 05/09/2014

(54) Title of the invention : AN ANTENNA

(51) International classification :H01Q3/26,H01Q3/40
(31) Priority Document No :10275065.0
(32) Priority Date :23/06/2010
(33) Name of priority country :EPO
(86) International Application No :PCT/EP2011/060522
Filing Date :22/06/2011
(87) International Publication No :WO 2011/161198
(61) Patent of Addition to Application Number :NA
Filing Date :NA
(62) Divisional to Application Number :NA
Filing Date :NA

(71)**Name of Applicant :**
1)ASTRIUM LIMITED
Address of Applicant :Gunnels Wood Road Stevenage Hertfordshire SG1 2AS U.K.
(72)**Name of Inventor :**
1)STIRLAND Simon John

(57) Abstract :
A phased array antenna for providing a radiation pattern comprising at least one communication beam the antenna comprising a plurality of antenna elements each antenna element having an antenna element signal having a phase relationship and an amplitude relationship to the other element signals; a digital signal processing arrangement providing a digital beamforming network; and an analogue beamforming network arranged to reduce exposure of the digital signal processing arrangement to an interfering signal the analogue beamforming network being configured to apply analogue beamforming weights selected to generate a null in the radiation pattern in a direction corresponding to the interfering signal to signals received from said antenna elements and the digital beamforming network being configured to apply digital beamforming weights for each of said at least one communication beams to signals received from said analogue beamforming network such that the composite radiation pattern of the antenna provides said at least one communication beams. The elements may be partitioned into subarrays the analogue beamforming network applying beamforming weights to each antenna element within a subarray and the digital beamforming network applying beamforming weights to each subarray.

No. of Pages : 29 No. of Claims : 15

(12) PATENT APPLICATION PUBLICATION
(19) INDIA
(22) Date of filing of Application :03/01/2013
(21) Application No.65/DELNP/2013 A
(43) Publication Date : 05/09/2014

(54) Title of the invention : DIABETES THERAPY

(51) International classification :A61K38/28,A61K31/155,A61K31/522
(31) Priority Document No :10167243.4
(32) Priority Date :24/06/2010
(33) Name of priority country :EPO
(86) International Application No :PCT/EP2011/060449
Filing Date :22/06/2011
(87) International Publication No :WO 2011/161161
(61) Patent of Addition to Application Number :NA
Filing Date :NA
(62) Divisional to Application Number :NA
Filing Date :NA

(71)**Name of Applicant :**
1)BOEHRINGER INGELHEIM INTERNATIONAL GMBH
Address of Applicant :Binger Strasse 173 55216 Ingelheim Am Rhein Germany
(72)**Name of Inventor :**
1)KLEIN Thomas
2)MARK Michael
3)THOMAS Leo

(57) Abstract :
The present invention relates to methods for treating and/or preventing metabolic diseases comprising the combined administration of a DPP 4 inhibitor and a long acting insulin. The invention further relates to a DPP 4 inhibitor for subcutaneous or transdermal use.

No. of Pages : 64 No. of Claims : 21

(12) PATENT APPLICATION PUBLICATION
(19) INDIA
(22) Date of filing of Application :03/01/2013
(21) Application No.71/DELNP/2013 A
(43) Publication Date : 05/09/2014

(54) Title of the invention : METHOD AND APPARATUS FOR PRODUCING GAS

(51) International classification :C25B1/02,C25B1/04,C25B9/06
(31) Priority Document No :2010/04892
(32) Priority Date :09/07/2010
(33) Name of priority country :South Africa
(86) International Application No :PCT/IB2011/053050
Filing Date :08/07/2011
(87) International Publication No :WO 2012/004769
(61) Patent of Addition to Application Number :NA
Filing Date :NA
(62) Divisional to Application Number :NA
Filing Date :NA

(71)**Name of Applicant :**
1)HYDROX HOLDINGS LIMITED
Address of Applicant :32 Ida Street Menlyn 0181 Pretoria South Africa
(72)**Name of Inventor :**
1)ANAGNOSTOPOULOS George

(57) Abstract :
This invention relates to an electrolysis method and electrolysis apparatus (10) for producing oxygenated and hydrogenated fluid. The apparatus (10) comprises first and second outer end members (12 and 14) both being of polyethylene and at least two spaced apart permeable electrodes (16 and 18). The permeable electrode (16 and 18) are each of a foraminous or perforated material such as nickel foam sheet material. The two permeable electrodes (16 and 18) are arranged generally parallel to one another and are relatively closely spaced from one another. An inlet chamber (20) is therefore defined between the first and second permeable electrodes (16 and 18). A first oxygenated fluid collection chamber (22) is disposed between the first permeable electrode (16) and the first end member (12) and a second hydrogenated fluid collection chamber (24) is disposed between the second permeable electrode (18) and the second end member (14).

No. of Pages : 27 No. of Claims : 29

(12) PATENT APPLICATION PUBLICATION
(19) INDIA
(22) Date of filing of Application :02/01/2013
(21) Application No.46/DELNP/2013 A
(43) Publication Date : 05/09/2014

(54) Title of the invention : IMAGE PROCESSING DEVICE AND IMAGE PROCESSING METHOD

(51) International classification :H04N7/32
(31) Priority Document No :2010157328
(32) Priority Date :09/07/2010
(33) Name of priority country :Japan
(86) International Application No :PCT/JP2011/063906
Filing Date :17/06/2011
(87) International Publication No :WO 2012/005099
(61) Patent of Addition to Application Number :NA
Filing Date :NA
(62) Divisional to Application Number :NA
Filing Date :NA

(71)**Name of Applicant :**
1)SONY CORPORATION
Address of Applicant :1 7 1 Konan Minato ku Tokyo 1080075 Japan
(72)**Name of Inventor :**
1)WANG Peng
2)SATO Kazushi

(57) Abstract :
I n order t o b e able t o handle blocks having a larger size while suppressing the line memory redundancy in an image pro cessing device, the shape (square or nonsquare) o f a block i n a prediction unit i s deter mined by using shape determining information for determining the shape o f the block in accor dance with the size of the block. Disclosed i s an image processing device provided with: a shape determining unit which determines, b y using shape determining information for determining the shape o f the Dlock in accordance with the size of the block, the shape o f a block t o b e set within an image; a motion vector setting unit which disposes a prediction unit for each block within the image i n accordance with the shape < determined b y means o f the shape determining unit and which sets the motion vector t o b e used in predicting the image within the predic tion unit for each disposed prediction unit; and an encoding unit which encodes the image by using the motion vector set by means o f the m o tion vector setting unit.

No. of Pages : 99 No. of Claims : 23

(12) PATENT APPLICATION PUBLICATION
(19) INDIA
(22) Date of filing of Application :03/01/2013
(21) Application No.59/DELNP/2013 A
(43) Publication Date : 05/09/2014

(54) Title of the invention : METHOD PERTAINING TO AIR REMOVAL FROM A DOSING SYSTEM AT AN SCR SYSTEM AND AN SCR SYSTEM

(51) International classification :F01N9/00,F01N3/20,F01N11/00
(31) Priority Document No :10506418
(32) Priority Date :21/06/2010
(33) Name of priority country :Sweden
(86) International Application No :PCT/SE2011/050801
Filing Date :20/06/2011
(87) International Publication No:WO 2011/162702
(61) Patent of Addition to Application Number :NA
Filing Date :NA
(62) Divisional to Application Number :NA
Filing Date :NA

(71)**Name of Applicant :**
1)SCANIA CV AB
Address of Applicant :S 151 87 Sdertlje Sweden
(72)**Name of Inventor :**
1)ERIKSSON Lars
2)CARLSSON Ulf
3)LILJESTRAND Andreas
4)BREMBERG Per

(57) Abstract :
The invention relates to a method pertaining to an SCR system in which reducing agent in liquid form is supplied to a feed device (230) via which reducing agent is supplied to at least one consumption point (250) from a container (205) comprising the step of continuously detecting the feed pressure (P) which the feed device (230) furnishes. The method comprises also the step of controlling the operation of the feed device (230) on the basis of changes ( ) in said feed pressure (P) with the object of reducing the impact of unwanted air supply at the feed device (230). The invention relates also to a computer programme product containing programme code (P) for a computer (200; 210) for implementing a method according to the invention. The invention relates also to an SCR system and a motor vehicle which is equipped with the SCR system.

No. of Pages : 34 No. of Claims : 22

(12) PATENT APPLICATION PUBLICATION
(21) Application No.81/DELNP/2013 A
(19) INDIA
(22) Date of filing of Application :03/01/2013
(43) Publication Date : 05/09/2014

(54) Title of the invention : SOIL CLEANING METHOD

(51) International classification :B09C1/02,B03C1/00,B09C1/00
(31) Priority Document No :NA
(32) Priority Date :NA
(33) Name of priority country :NA
(86) International Application No :PCT/JP2010/061959
Filing Date :15/07/2010
(87) International Publication No :WO 2012/008032
(61) Patent of Addition to Application Number :NA
Filing Date :NA
(62) Divisional to Application Number :NA
Filing Date :NA

(71)**Name of Applicant :**
1)DOWA ECO SYSTEM CO. LTD.
Address of Applicant :4 14 1 Sotokanda Chiyoda ku Tokyo 1010021 Japan
(72)**Name of Inventor :**
1)YOSHI Shunsuke
2)TOMOGUCHI Masaru

(57) Abstract :
The disclosed method sorts contaminated soil into gravel, coarse soil and fine soil without using water, and separates contaminants fiOm the coarse soil easily and inexpensively. The soil cleaning method is characterized in that after a pre-treatment process of mixing dehydrating agent with the soil t o reduce the water content t o 10 mass% or less, the soil with water content reduced t o 10 mass% or less i n said pre-treatment process is fed into a dry magnetic separator and a magnet ic separation process of separating and removing contaminants in the coarse soil as magnetic material is performed. Sorting the soil in a dry state into magnetic material and nonmagnetic material and recovering the magnetic material that is highly contaminated facilitates separation of fine soil from the contaminated soil and enables easy reduction of the contaminant content in the coarse soil.

No. of Pages : 29 No. of Claims : 5

(12) PATENT APPLICATION PUBLICATION
(19) INDIA
(22) Date of filing of Application :16/11/2012
(21) Application No.9942/DELNP/2012 A
(43) Publication Date : 05/09/2014

(54) Title of the invention : STABLE READY TO USE INJECTABLE PARACETAMOL FORMULATION

(51) International classification :A61K9/00,A61K31/167,A61K47/18
(31) Priority Document No :10005258.8
(32) Priority Date :19/05/2010
(33) Name of priority country :EPO
(86) International Application No :PCT/EP2011/002482
Filing Date :18/05/2011
(87) International Publication No :WO 2011/144335
(61) Patent of Addition to Application Number :NA
Filing Date :NA
(62) Divisional to Application Number :NA
Filing Date :NA

(71)**Name of Applicant :**
1)UNI PHARMA KLEON TSETIS PHARMACEUTICAL LABORATORIES S.A.
Address of Applicant :14th Km National Road 1 GR 145 64 Kifissia Greece
(72)**Name of Inventor :**
1)TSETI Ioulia

(57) Abstract :
The invention concerns a stable aqueous paracetamol solution for use in IV infusion comprising at least one stabilizing dissolving compound for paracetamol in solution selected from the group consisting of cyclodextrins at least one stabilizing compound bearing at least one thiol functional group and at least one stabilizing compound selected from the group consisting of Thiamine salts.

No. of Pages : 15 No. of Claims : 15

(12) PATENT APPLICATION PUBLICATION
(21) Application No.9943/DELNP/2012 A
(19) INDIA
(22) Date of filing of Application :16/11/2012
(43) Publication Date : 05/09/2014

(54) Title of the invention : SYSTEMS AND METHODS FOR TISSUE ABLATION

(51) International classification :A61B18/12
(31) Priority Document No :61/347351
(32) Priority Date :21/05/2010
(33) Name of priority country :U.S.A.
(86) International Application No :PCT/US2011/035253
Filing Date :04/05/2011
(87) International Publication No :WO 2011/146243
(61) Patent of Addition to Application Number :NA
Filing Date :NA
(62) Divisional to Application Number :NA
Filing Date :NA

(71)**Name of Applicant :**
1)NIMBUS CONCEPTS LLC
Address of Applicant :333 South Monroe Street #113 Denver CO 80209 U.S.A.
(72)**Name of Inventor :**
1)WRIGHT Robert E.
2)BRANDT Scott A.

(57) Abstract :
Systems and methods for tissue ablation. Systems include needles with deployable filaments capable of producing asymmetrical offset lesions at target volumes which may include a target nerve. Ablation of at least a portion of the target nerve may inhibit the ability of the nerve to transmit signals such as pain signals to the central nervous system. The offset lesion may facilitate procedures by directing energy towards the target nerve and away from collateral structures. Example anatomical structures include lumbar thoracic and cervical medial branch nerves and rami and the sacroiliac joint.

No. of Pages : 119 No. of Claims : 15

(12) PATENT APPLICATION PUBLICATION
(19) INDIA
(22) Date of filing of Application :03/10/2013
(21) Application No.1851/MUMNP/2013 A
(43) Publication Date : 05/09/2014

(54) Title of the invention : ALUMINUM CARBON COMPOSITIONS

(51) International classification :C22C21/08,C22C21/02,C22C21/10
(31) Priority Document No :61/449406
(32) Priority Date :04/03/2011
(33) Name of priority country :U.S.A.
(86) International Application No :PCT/US2012/027543
Filing Date :02/03/2012
(87) International Publication No :WO 2012/122035
(61) Patent of Addition to Application Number :NA
Filing Date :NA
(62) Divisional to Application Number :NA
Filing Date :NA

(71)**Name of Applicant :**
1)THIRD MILLENNIUM METALS LLC
Address of Applicant :110 East Emmitt Avenue Waverly OH 45690 U.S.A.
(72)**Name of Inventor :**
1)SHUGART Jason V.
2)SCHERER Roger C.
3)PENN Roger Lee

(57) Abstract :
An aluminum carbon composition including aluminum and carbon wherein the aluminum and the carbon form a single phase material characterized in that the carbon does not phase separate from the aluminum when the single phase material is heated to a melting temperature.

No. of Pages : 19 No. of Claims : 15

(12) PATENT APPLICATION PUBLICATION
(21) Application No.1852/MUMNP/2013 A
(19) INDIA
(22) Date of filing of Application :03/10/2013
(43) Publication Date : 05/09/2014

(54) Title of the invention : WATER FLOW POWER GENERATION APPARATUS

(51) International classification :F03B1/00,F03B13/00
(31) Priority Document No :201110078623.7
(32) Priority Date :30/03/2011
(33) Name of priority country :China
(86) International Application No :PCT/CN2012/072247
Filing Date :13/03/2012
(87) International Publication No :WO 2012/130037
(61) Patent of Addition to Application Number :NA
Filing Date :NA
(62) Divisional to Application Number :NA
Filing Date :NA

(71)**Name of Applicant :**
1)SHANDONG BOXING YUANDAO ENERGY TECHNOLOGY CO. LTD.
Address of Applicant :No.275 Bochengsi Road (Bochang Street) Boxing Binzhou Shandong 256599 China
(72)**Name of Inventor :**
1)ZHANG Qun

(57) Abstract :
A water flow power generation apparatus comprising a bracket water wheels (7 10) a transmission (4) driven by the water wheels (7 10) and a generator (3); there is at least one bracket and the bracket comprises an upper bracket (1) and a lower bracket (8); a sharp angular fairing A (9) is fixedly connected at the water inlet end of a water wheel between the upper bracket (1) and the lower bracket (8); at least two retrograde water wheels (7 10) are fixed between the upper bracket (1) and the lower bracket (8); the blades of adjacent water wheels (7 10) are mutually staggered; the same ends of each water wheel (7 10) are respectively connected with synchronous gears (2 11) capable of mutual engagement; and the generator (3) is connected with the water wheel shafts (5 12) the synchronous gears (2 11) and the water wheels (7 10) via the transmission(4). Under the effect of the synchronous gears (2 11) each water wheel (7 10) is capable of simultaneous retrograde rotation and the blades of adjacent water wheels (7 10) do not collide or interfere with each other; the torque from each water wheel can be transferred to the generator (3) for power generation thus both improving the water power utilization rate and increasing power generation efficiency; moreover the entire generator apparatus is structurally simple the manufacturing cost is low is convenient to install and has wide application in all kinds of water flows.

No. of Pages : 21 No. of Claims : 17

(12) PATENT APPLICATION PUBLICATION
(21) Application No.1853/MUMNP/2013 A
(19) INDIA
(22) Date of filing of Application :03/10/2013
(43) Publication Date : 05/09/2014

(54) Title of the invention : LIFTING SYSTEM AND LIFTING METHOD FOR JIB OF PROJECT MACHINE AND PROJECT MACHINE THEREOF

(51) International classification	:F15B1/04,F15B21/14	(71)**Name of Applicant :**
(31) Priority Document No	:201110067311.6	**1)YANG Shuanglai**
(32) Priority Date	:21/03/2011	Address of Applicant :Room 2402 Lanting HaGongGuan No. 505 You Yi Road DaoLi District Harbin Heilongjiang 150010 China
(33) Name of priority country	:China	
(86) International Application No	:PCT/CN2011/084636	
Filing Date	:26/12/2011	(72)**Name of Inventor :**
(87) International Publication No	:WO 2012/126266	**1)YANG Shuanglai**
(61) Patent of Addition to Application Number	:NA	
Filing Date	:NA	
(62) Divisional to Application Number	:NA	
Filing Date	:NA	

(57) Abstract :
Disclosed in the present invention is a lifting system for a jib of project machine. which comprises an energy storage device with an energy storage cylinder(4) and an accumulator (7) wherein the energy storage cylinder (4) comprises an upper chamber (4a) an lower chamber (4b) and an energy storage piston rod (2) connected with the jib(1) the upper part of the accumulator (7) is filled with gas and the lower part of which is filled with hydraulic oil and the accumulator (7) communicated with the lower chamber (4b) of the energy storage cylinder; a control cylinder(12) which controls the lifting of the jib (1) and comprises an upper chamber (12a) an lower chamber (12b) and a control piston rod (23) connected with the jib (1); a hydraulic pump (9) When the hydraulic pump supplies oil to the upper chamber (12a) of the control cylinder the jib (1) is descending and the weight of the jib pushes the energy storage piston rod (2) to push the hydraulic oil in the lower chamber (4b) of the energy storage cylinder into the lower part of the accumulator to press the air in the upper part for recovering the potential energy; when the hydraulic pump supplies oil to the lower chamber (12b) of the control cylinder the jib (1) is ascending and lifts the energy storage piston rod (2) and the pressed air in the upper part of the accumulator pushes the oil (19) in the lower part into the lower chamber (4b) to release the recovered potential energy to push the energy storage piston rod (2) for elevating the jib. The system effectively recoveries and recycles the potential energy of the descending jib so that the energy is saved and the efficiency of the jib is improved. Also disclosed in the present invention are a project machine with the said lifting system and a lifting method of the jib using the said lifting system.

No. of Pages : 25 No. of Claims : 13

(12) PATENT APPLICATION PUBLICATION
(19) INDIA
(22) Date of filing of Application :02/08/2013
(21) Application No.1491/MUMNP/2013 A
(43) Publication Date : 05/09/2014

(54) Title of the invention : ADHESIVE AGENT COMPOSITION AND LAMINATED BODY

(51) International classification :C09J175/08,B32B27/00,B32B27/30
(31) Priority Document No :2011-010335
(32) Priority Date :21/01/2011
(33) Name of priority country :Japan
(86) International Application No :PCT/JP2012/051257
Filing Date :20/01/2012
(87) International Publication No :WO 2012/099256
(61) Patent of Addition to Application Number :NA
Filing Date :NA
(62) Divisional to Application Number :NA
Filing Date :NA

(71)**Name of Applicant :**
1)TOYO INK SC HOLDINGS CO. LTD.
Address of Applicant :7 1 Kyobashi 3 chome Chuo ku Tokyo 1048377 Japan
2)TOYOCHEM CO. LTD.
(72)**Name of Inventor :**
1)SUGI Hiroki
2)YASUI Bungo
3)MAEDA Seiji
4)UEKI Katsuyuki
5)SHIMADA Kenshiro

(57) Abstract :
The present invention provides an adhesive agent composition comprising a primary agent which contains polyether polyurethane polyol and bisphenol A type epoxy resin as well as a curing agent. The polyether polyurethane polyol is obtained by reacting an organic diisocyanate with an alkane diol monomer and polyalkylene glycol containing C repeating units at an equivalent ratio (NCO/OH) of a least 0.7 and less than 1; the weight average molecular weight thereof is 20 000 to 70 000 and the urethane bond equivalence is 320 to 600 g/eq. The bisphenol A type epoxy resin has a number average molecular weight of 400 to 5 000 and forms a solid or semisolid at room temperature.

No. of Pages : 45 No. of Claims : 11

(12) PATENT APPLICATION PUBLICATION
(19) INDIA
(22) Date of filing of Application :04/10/2013
(21) Application No.1855/MUMNP/2013 A
(43) Publication Date : 05/09/2014

(54) Title of the invention : FERTILIZER COMPOSITION INCORPORATING FIBROUS MATERIAL FOR ENHANCED PARTICLE INTEGRITY

(51) International classification :C05B1/00,C05D9/02,C05F7/00
(31) Priority Document No :61/467001
(32) Priority Date :24/03/2011
(33) Name of priority country :U.S.A.
(86) International Application No :PCT/US2012/030311
Filing Date :23/03/2012
(87) International Publication No :WO 2012/129487
(61) Patent of Addition to Application Number :NA
Filing Date :NA
(62) Divisional to Application Number :NA
Filing Date :NA

(71)**Name of Applicant :**
1)KUCERA Paul
Address of Applicant :c/o The Mosaic Company 3033 Campus Drive Suite E490 Plymouth MN 55441 U.S.A.
2)SAWYER W. Gregory
(72)**Name of Inventor :**
1)KUCERA Paul
2)SAWYER W. Gregory

(57) Abstract :
Fertilizer granules and methods of producing fertilizer granules. The fertilizer granules are formed from a fertilizer composition such as a phosphate fertilizer includes a fibrous material for the purpose of increasing the granule strength preventing or reducing attrition or dusting formation during storage transport and/or handling of the fertilizer. Dust formation can be reduced fifty percent or more. The base fertilizer composition can include a phosphate fertilizer such as monoammonium phosphate (MAP) or diammonium phosphate (DAP) and optionally one or more micronutrients or secondary nutrients such as elemental sulfur. The fibrous material is pulp or paper sludge for example.

No. of Pages : 18 No. of Claims : 21

(12) PATENT APPLICATION PUBLICATION
(21) Application No.1857/MUMNP/2013 A
(19) INDIA
(22) Date of filing of Application :04/10/2013
(43) Publication Date : 05/09/2014

(54) Title of the invention : INFORMATION PROCESSING APPARATUS INFORMATION PROCESSING SYSTEM AND PROGRAM

(51) International classification :G06F13/00,H04N7/173
(31) Priority Document No :2011-132071
(32) Priority Date :14/06/2011
(33) Name of priority country :Japan
(86) International Application No :PCT/JP2012/003490
Filing Date :29/05/2012
(87) International Publication No :WO 2012/172740
(61) Patent of Addition to Application Number :NA
Filing Date :NA
(62) Divisional to Application Number :NA
Filing Date :NA

(71)**Name of Applicant :**
1)SONY CORPORATION
Address of Applicant :1 7 1 Konan Minato ku Tokyo 1080075 Japan
(72)**Name of Inventor :**
1)OHASHI Yoshinori

(57) Abstract :
An information processing device is disclosed. The information processing device includes an identifier acquisition unit configured to receive an identifier of an associated device and an application specifier generation unit. The application specifier generation unit is configured to generate a first application specifier identifying a first application corresponding to the information processing device and a second application specifier based on the received identifier and identifying a second application corresponding to the associated device. The information processing device further includes a transmission unit configured to transmit the first and second application specifiers to a server and an application reception unit configured to receive the first application.

No. of Pages : 60 No. of Claims : 20

(12) PATENT APPLICATION PUBLICATION
(19) INDIA
(22) Date of filing of Application :04/10/2013
(21) Application No.1858/MUMNP/2013 A
(43) Publication Date : 05/09/2014

(54) Title of the invention : USER INTERFACE ELEMENTS AUGMENTED WITH FORCE DETECTION

(51) International classification :G06F3/048
(31) Priority Document No :61/488072
(32) Priority Date :19/05/2011
(33) Name of priority country :U.S.A.
(86) International Application No :PCT/US2012/035992
Filing Date :01/05/2012
(87) International Publication No :WO 2012/158337
(61) Patent of Addition to Application Number :NA
Filing Date :NA
(62) Divisional to Application Number :NA
Filing Date :NA

(71)**Name of Applicant :**
1)QUALCOMM INCORPORATED
Address of Applicant :ATTN: International IP Administration 5775 Morehouse Drive San Diego California 92121 1714 U.S.A.
(72)**Name of Inventor :**
1)MOMEYER Brian
2)BECKWITH Kevin M.

(57) Abstract :
A computing device includes a touch screen display with at least one force sensor each of which provides a signal in response to contact with the touch screen display. Using force signals from the at least one force sensor that result from contact with the touch screen the operation of the computing device may be controlled e.g. to select one of a plurality of overlaying interface elements to prevent the unintended activation of suspect commands that require secondary confirmation and to mimic the force requirements of real world objects in augmented reality applications.

No. of Pages : 36 No. of Claims : 48

(12) PATENT APPLICATION PUBLICATION
(19) INDIA
(22) Date of filing of Application :04/10/2013
(21) Application No.1854/MUMNP/2013 A
(43) Publication Date : 05/09/2014

(54) Title of the invention : CONTROL DEVICE AND METHOD FOR INTERNAL COMBUSTION ENGINE

(51) International classification :F02M21/02,F02D19/08,F02M25/00
(31) Priority Document No :NA
(32) Priority Date :NA
(33) Name of priority country:NA
(86) International Application No :PCT/JP2011/059851
Filing Date :21/04/2011
(87) International Publication No :WO 2012/144051
(61) Patent of Addition to Application Number :NA
Filing Date :NA
(62) Divisional to Application Number :NA
Filing Date :NA

(71)**Name of Applicant :**
1)TOYOTA JIDOSHA KABUSHIKI KAISHA
Address of Applicant :1 Toyota cho Toyota shi Aichi 4718571 Japan
(72)**Name of Inventor :**
1)NAKAJIMA Toshiya

(57) Abstract :
It is an object of the invention to provide an art realizing good combustion by lowering a combustion critical temperature below a temperature of intake air sucked into a cylinder, in the case where a first fuel that is difficult to ignite and a second fuel that is easy to ignite are supplied into the cylinder. The invention is a control device for an internal combustion engine that includes a control unit that supplies a first fuel that is difficult to ignite and a second fuel that is easy to ignite into a cylinder, and burns the first fuel that is difficult to ignite as well by igniting the second fuel that is easy to ignite, wherein the control unit carries out at least one of a reduction in a supply amount of the first fuel that is difficult to ignite and an increase in a supply amount of the second fuel that is easy to ignite, if a temperature of intake air sucked into the cylinder falls below a combustion critical temperature.

No. of Pages : 45 No. of Claims : 5

(12) PATENT APPLICATION PUBLICATION
(21) Application No.2085/MUM/2012 A
(19) INDIA
(22) Date of filing of Application :20/07/2012
(43) Publication Date : 05/09/2014

(54) Title of the invention : PASSENGER VEHICLE WITH AUXILLIARY POWER SOURCES

(51) International classification	:E05B65/20, E05B47/00
(31) Priority Document No	:NA
(32) Priority Date	:NA
(33) Name of priority country	:NA
(86) International Application No	:NA
Filing Date	:NA
(87) International Publication No	:N/A
(61) Patent of Addition to Application Number	:NA
Filing Date	:NA
(62) Divisional to Application Number	:NA
Filing Date	:NA

(71)**Name of Applicant :**
1)DEWAN MOHAN
Address of Applicant :1147-B, MOHAN VILLA, SHIVAJINAGAR,PUNE-411 016. MAHARASHTRA, INDIA.
2)MALHOTRA MEERA
(72)**Name of Inventor :**
1)DEWAN MOHAN
2)MALHOTRA MEERA

(57) Abstract :
A passenger vehicle utilizing an auxiliary power source is disclosed. The passenger vehicle includes an auxiliary power generation system. The auxiliary power generation system further includes at least one auxiliary power generating station obtaining energy from at least one passenger on-board the passenger vehicle for contributing to the power requirements of the passenger vehicle. The at least one auxiliary power generating station includes at least one input shaft that is driven manually by at least one passenger on-board the passenger vehicle, an output shaft, at least one transmission for facilitating transmission of torque from the at least one input shaft to the output shaft, at least one clutch for selectively connecting the input shaft to the output shaft in order to define power transmission network and a generator coupled to the output shaft for generating power to cater power requirements of the passenger vehicle.

No. of Pages : 16 No. of Claims : 8

(12) PATENT APPLICATION PUBLICATION
(21) Application No.2087/MUM/2012 A
(19) INDIA
(22) Date of filing of Application :20/07/2012
(43) Publication Date : 05/09/2014

(54) Title of the invention : WATER SAVING HOT FLUID DISPENSER

(51) International classification	:B67D3/00, F24H1/20	(71)**Name of Applicant :** **1)DEWAN MOHAN** Address of Applicant :1147-B,MOHAN VILLA, SHIVAJI NAGAR,PUNE-411 016. MAHARASHTRA,INDIA.
(31) Priority Document No	:NA	
(32) Priority Date	:NA	
(33) Name of priority country	:NA	(72)**Name of Inventor :** **1)DEWAN MOHAN**
(86) International Application No	:NA	
Filing Date	:NA	
(87) International Publication No	:N/A	
(61) Patent of Addition to Application Number	:NA	
Filing Date	:NA	
(62) Divisional to Application Number	:NA	
Filing Date	:NA	

(57) Abstract :
A heating arrangement for a fluid dispenser is disclosed in the present disclosure. The heating arrangement includes a main heating element and an auxiliary heating element. The main heating element supplies heated fluid to the fluid dispenser. The auxiliary heating element is disposed immediately upstream of the fluid dispenser and heats fluid accumulated in a fluid flow conduit connecting the main heating element and the fluid dispenser before dispensing fluid from the fluid dispenser, thereby maintaining continuous supply of hot fluid from the fluid dispenser.

No. of Pages : 16 No. of Claims : 6

(12) PATENT APPLICATION PUBLICATION
(19) INDIA
(22) Date of filing of Application :19/10/2012
(21) Application No.2418/MUMNP/2012 A
(43) Publication Date : 05/09/2014

(54) Title of the invention : METHODS,COMPOSITIONS AND KITS FOR PROVIDING A THERAPEUTIC TREATMENT

(51) International classification	:A01N37/12, A01N37/44
(31) Priority Document No	:61/328,825
(32) Priority Date	:28/04/2010
(33) Name of priority country	:U.S.A.
(86) International Application No	:PCT/IL2011/000346
Filing Date	:28/04/2011
(87) International Publication No	:WO/2011/135574
(61) Patent of Addition to Application Number	:NA
Filing Date	:NA
(62) Divisional to Application Number	:NA
Filing Date	:NA

(71)**Name of Applicant :**
1)ASHUR-FABIAN Osnat
Address of Applicant :6 Hagefen Street 42810 Zur Moshe Israel
2)HERCBERGS Aleck
(72)**Name of Inventor :**
1)ASHUR-FABIAN Osnat
2)HERCBERGS Aleck

(57) Abstract :
The present invention encompasses a therapeutic method which employs treatment of a disease such as cancer with triiodothyronine (T3) together with an anti-thyroid treatment such as treatment with an anti-thyroid agent treatment with radioiodine and surgical removal of all or part of the thyroid gland. A pharmaceutical composition comprising T3 and an anti-thyroid agent and a kit comprising the same are also encompassed by the invention.

No. of Pages : 33 No. of Claims : 37

(12) PATENT APPLICATION PUBLICATION
(19) INDIA
(22) Date of filing of Application :03/12/2012
(21) Application No.2685/MUMNP/2012 A
(43) Publication Date : 05/09/2014

(54) Title of the invention : METHOD AND SYSTEM FOR CORRECTING GAZE OFFSET

(51) International classification :H04N 7/14
(31) Priority Document No :61/348,269
(32) Priority Date :26/05/2010
(33) Name of priority country :U.S.A.
(86) International Application No :PCT/IL2011/000334
Filing Date :26/04/2011
(87) International Publication No :WO/2011/148366
(61) Patent of Addition to Application Number :NA
Filing Date :NA
(62) Divisional to Application Number :NA
Filing Date :NA

(71)**Name of Applicant :**
1)Ramot at Tel-Aviv University Ltd.
Address of Applicant :P.O. Box 39296 61392 Tel-Aviv Israel.
(72)**Name of Inventor :**
1)WOLF Lior
2)FREUND Ziv

(57) Abstract :
A method of correcting gaze offset in an image of at least one individual having eyes is disclosed. The method comprises: processing the image to extract location of at least one eye over the image processing the image to replace imagery data associated with each location of each eye with replacement data thereby providing a corrected image and transmitting the corrected image to a display device. The replacement data are preferably previously-recorded imagery data which respectively correspond to the same eye but a different gaze.

No. of Pages : 51 No. of Claims : 26

(12) PATENT APPLICATION PUBLICATION
(19) INDIA
(22) Date of filing of Application :03/12/2012
(21) Application No.2687/MUMNP/2012 A
(43) Publication Date : 05/09/2014

(54) Title of the invention : HYBRID OLTP AND OLAP HIGH PERFORMANCE DATABASE SYSTEM

(51) International classification :G06F 17/30
(31) Priority Document No :1008184.2
(32) Priority Date :17/05/2010
(33) Name of priority country :U.K.
(86) International Application No :PCT/EP2011/055221
Filing Date :04/04/2011
(87) International Publication No :WO/2011/144382
(61) Patent of Addition to Application Number :NA
Filing Date :NA
(62) Divisional to Application Number :NA
Filing Date :NA

(71)**Name of Applicant :**
1)Technische Universitt M¼nchen
Address of Applicant :Forschungsfrderung und Technologietransfer Arcisstr. 21 DE - 80333 Munich Germany. Germany
(72)**Name of Inventor :**
1)KEMPER Alfons
2)NEUMANN Thomas

(57) Abstract :
There is provided a method of maintaining a hybrid OLTP and OLAP database the method comprising: executing one or more OLTP transactions; creating a virtual memory snapshot; and executing one or more OLAP queries using the virtual memory snapshot. Preferably the method further comprises replicating a virtual memory page on which a data object is stored in response to an update to the data object whereby the updated data object is accessible for OLTP transactions while the non-updated data object remains accessible for OLAP queries. Accordingly the present invention provides a hybrid systemthat can handle both OLTP and OLAP simultaneously by using hardware-assisted replication mechanisms to maintain consistent snapshots of the transactional data.

No. of Pages : 37 No. of Claims : 19

(12) PATENT APPLICATION PUBLICATION
(19) INDIA
(22) Date of filing of Application :26/09/2012
(21) Application No.2279/MUMNP/2012 A
(43) Publication Date : 05/09/2014

(54) Title of the invention : INDOLYL OR INDOLINYL HYDROXAMATE COMPOUNDS

(51) International classification	:C07D209/20, C07D209/12
(31) Priority Document No	:61/318,715
(32) Priority Date	:29/03/2010
(33) Name of priority country	:U.S.A.
(86) International Application No	:PCT/US2011/030263
Filing Date	:29/03/2011
(87) International Publication No	:WO/2011/126821
(61) Patent of Addition to Application Number	:NA
Filing Date	:NA
(62) Divisional to Application Number	:NA
Filing Date	:NA

(71)**Name of Applicant :**
1)TAIPEI MEDICAL UNIVERSITY
Address of Applicant :250 Wu-Hsing Street Taipei City 110 Taiwan.
2)OHIO STATE UNIVERSITY
3)NATIONAL TAIWAN UNIVERSITY
(72)**Name of Inventor :**
1)CHEN Ching-Shih
2)LIOU Jing-Ping
3)LIU Hsing-Jin
4)HUNG Kuo-Sheng
5)SHAN Pei-Wen
6)CHIU Wen-Ta
7)TENG Che-Ming

(57) Abstract :
Described herein are indolyl or indolinyl hydroxamates and pharmaceutical compositions comprising the same which show histone diacetylase (HDAC) inhibition activity. Also disc a method for treating cancer with these compounds.

No. of Pages : 37 No. of Claims : 20

(12) PATENT APPLICATION PUBLICATION
(19) INDIA
(22) Date of filing of Application :01/10/2013
(21) Application No.1840/MUMNP/2013 A
(43) Publication Date : 05/09/2014

(54) Title of the invention : DEVICE AND METHOD FOR EXECUTION OF HUFFMAN CODING

(51) International classification :G10L19/02
(31) Priority Document No :2011-094295
(32) Priority Date :20/04/2011
(33) Name of priority country :Japan
(86) International Application No :PCT/JP2012/001701
Filing Date :12/03/2012
(87) International Publication No :WO 2012/144127
(61) Patent of Addition to Application Number :NA
Filing Date :NA
(62) Divisional to Application Number :NA
Filing Date :NA

(71)**Name of Applicant :**
1)PANASONIC INTELLECTUAL PROPERITY CORPORATION OF AMERICA
Address of Applicant :20000 MARINER AVENUE, SUITE 200, TORRANCE CA 90503, U.S.A.
(72)**Name of Inventor :**
1)LIU Zongxian
2)CHONG Kok Seng
3)OSHIKIRI Masahiro

(57) Abstract :
In order to introduce a device and a method for the execution of Huffman coding for the coding and decoding of an audio signal in the present invention the design of a Huffman table can be carried out offline through the use of an extensive input sequence database. The range for a quantization index (or a differentiation index) for Huffman coding is identified. All the input signals having the same range are gathered for each of the range values and the probability distribution for each value in the quantization index (or the differentiation index) within the range is calculated. A single Huffman table is designed for each range value according to probability.

No. of Pages : 36 No. of Claims : 13

(12) PATENT APPLICATION PUBLICATION
(19) INDIA
(22) Date of filing of Application :01/03/2013
(21) Application No.3554/MUM/2012 A
(43) Publication Date : 05/09/2014

(54) Title of the invention : A METHOD AND SYSTEM FOR ESTIMATION OF BLOOD ANYLATES

(51) International classification :A61B5/00
(31) Priority Document No :NA
(32) Priority Date :NA
(33) Name of priority country :NA
(86) International Application No :NA
Filing Date :NA
(87) International Publication No : NA
(61) Patent of Addition to Application Number :NA
Filing Date :NA
(62) Divisional to Application Number :NA
Filing Date :NA

(71)**Name of Applicant :**
1)ABHISHEK SEN
Address of Applicant :ARPAN, PLOT NO.12, JAI BHAVANI ROAD, NASHIK ROAD, NASHIK - 422101, MAHARASHTRA India
2)AMAN MIDHA
(72)**Name of Inventor :**
1)ABHISHEK SEN
2)AMAN MIDHA

(57) Abstract :
The present invention relates to a method and system for estimation of blood anylates, more particularly the invention relates to mitigation strategies for the confounding factors in the non-invasive estimation of blood anylates. The present invention is hypothesized to measured with an accuracy reasonable for an anaemia screening tool through measurement of the following parameters Finger Size, Transmitted infrared light through the finger, Finger tip temperature.

No. of Pages : 31 No. of Claims : 24

(12) PATENT APPLICATION PUBLICATION
(21) Application No.1844/MUMNP/2013 A
(19) INDIA
(22) Date of filing of Application :02/10/2013
(43) Publication Date : 05/09/2014

(54) Title of the invention : METHOD FOR PRODUCING PHARMACEUTICAL PRODUCTS FROM A MELT MATERIAL

(51) International classification :A61K9/16,B29B9/06
(31) Priority Document No :10 2011 018 403.1
(32) Priority Date :21/04/2011
(33) Name of priority country :Germany
(86) International Application No :PCT/EP2012/001703
Filing Date :19/04/2012
(87) International Publication No :WO 2012/143133
(61) Patent of Addition to Application Number :NA
Filing Date :NA
(62) Divisional to Application Number :NA
Filing Date :NA

(71)**Name of Applicant :**
1)AUTOMATIK PLASTICS MACHINERY GMBH
Address of Applicant :Ostring 19 63762 Grossostheim Germany
(72)**Name of Inventor :**
1)MRB Reinhardt Karsten

(57) Abstract :
The invention relates to a method for producing pharmaceutical products from a melt material wherein the melt material emerges from nozzles in a perforated plate and is then granulated and wherein a blade arrangement having at least one blade which is driven by a motor is disposed opposite the perforated plate so that the at least one blade passes over the nozzles in the perforated plate and in so doing cuts off granules of the emerging melt material. A housing is provided which is connected to the perforated plate and at least surrounds the at least one blade of the blade arrangement wherein a cooling medium flows through said housing so that the granules of melt material are solidified in the cooling medium which is introduced radially inwards or substantially radially inwards from outside all across the circumference from an inflow device formed by a separate inflow chamber which surrounds the circumference of the housing in the range of rotation of the at least one blade and from a circumferentially disposed inflow nozzle arrangement between the inflow chamber and the housing. A centripetal or at least substantially centripetal flow of the cooling medium is formed at least in the range of rotation and furthermore the cooling medium and the granules located therein are fed to an outlet in the housing wherein the cooling medium is a gaseous cooling medium.

No. of Pages : 18 No. of Claims : 4

(12) PATENT APPLICATION PUBLICATION
(21) Application No.1850/MUMNP/2013 A
(19) INDIA
(22) Date of filing of Application :03/10/2013
(43) Publication Date : 05/09/2014

(54) Title of the invention : DIRECT CURRENT ELECTRIC MOTOR

(51) International classification	:H02K29/08, H02K3/26	(71)**Name of Applicant :** **1)COMINFO A.S.** Address of Applicant :N¡breÅ¾ 695 76001 Zln PrÅ¡tn Czech Republic
(31) Priority Document No	:PV 2011293	
(32) Priority Date	:17/05/2011	
(33) Name of priority country	:Czech Republic	(72)**Name of Inventor :** **1)V CLAV KonfrÅ¡t**
(86) International Application No	:PCT/CZ2012/000039	
Filing Date	:11/05/2012	
(87) International Publication No	:WO 2012/155868	
(61) Patent of Addition to Application Number	:NA	
Filing Date	:NA	
(62) Divisional to Application Number	:NA	
Filing Date	:NA	

(57) Abstract :
For applications standard d c machines require gear boxes there is designed a d c motor provided with a first basic element (1) made of magnetic conductive material and carrying a system of unipolar oriented magnets (3) and further provided with a second basic element (2) made of magnetic non conductive material and carrying at least one coil (4) with leads for connection to a source of d c current. The coil (4) is located on a core (5) made of a magnetic conductive material and arranged mutually spaced apart along the system of the magnets. The first and the second parts are mutually relatively movable. In a preferred application the magnets are made of permanent magnets (3).

No. of Pages : 12 No. of Claims : 4

(12) PATENT APPLICATION PUBLICATION
(21) Application No.2713/MUMNP/2012 A
(19) INDIA
(22) Date of filing of Application :06/12/2012
(43) Publication Date : 05/09/2014

(54) Title of the invention : SYSTEM AND METHOD OF ADDRESSING AND ACCESSING INFORMATION USING A KEYWORD IDENTIFIER

(51) International classification	:G06F17/30	(71)**Name of Applicant :**
(31) Priority Document No	:61/397387	**1)NITIN Dinesh Anand**
(32) Priority Date	:11/06/2010	Address of Applicant :6213 LOVE DRIVE,
(33) Name of priority country	:U.S.A.	#2618,IRVING,TEXAS 75039,USA
(86) International Application No	:PCT/IN2011/000377	(72)**Name of Inventor :**
Filing Date	:07/06/2011	**1)NITIN Dinesh Anand**
(87) International Publication No	:WO 2011/154974	
(61) Patent of Addition to Application Number	:NA	
Filing Date	:NA	
(62) Divisional to Application Number	:NA	
Filing Date	:NA	

(57) Abstract :
The present invention relates to a system and method of addressing and accessing information on the Internet comprising of a Keyword Identifier and means to interpret the Keyword Identifier wherein said means include a Software Protocol and a Keyword Management System. These means include the process of generating a query by the Software Protocol on the basis of the said Keyword Identifier; said query being sent to the system of the domain that the Keyword Identifier belongs to or any other system that can interpret the query correctly. The Software Protocol then interprets the said query into a Keyword Identifier and selects the data mapped for the Keyword Identifier which thereafter sends this result to the system using the Keyword Identifier. The Keyword Identifier is created and maintained through a Internet Website system or a Software System running on a Client Server Computer System as a means of addressing and accessing their Electronic Resources using the Keyword Management System.

No. of Pages : 48 No. of Claims : 30

(12) PATENT APPLICATION PUBLICATION
(21) Application No.2503/MUMNP/2012 A
(19) INDIA
(22) Date of filing of Application :01/11/2012
(43) Publication Date : 05/09/2014

(54) Title of the invention : POLYMER COATED HYDROLYZED MEMBRANE

(51) International classification	:B01D61/02, B01D69/02, B01D71/00
(31) Priority Document No	:61/330,559
(32) Priority Date	:03/05/2010
(33) Name of priority country	:U.S.A.
(86) International Application No	:PCT/US2011/035083
Filing Date	:03/05/2011
(87) International Publication No	:WO/2011/140158
(61) Patent of Addition to Application Number	:NA
Filing Date	:NA
(62) Divisional to Application Number	:NA
Filing Date	:NA

(71)**Name of Applicant :**
1)HERRON John R.
Address of Applicant :2960 SW Morris Ave. Corvallis Oregon 97333 United States of America
(72)**Name of Inventor :**
1)HERRON John R.

(57) Abstract :
A method of forming a polymer coated hydrolyzed membrane includes forming a membrane from a first hydrophilic polymer by immersion precipitation coating the membrane with a thin layer of a second hydrophilic polymer more pH tolerant than the first hydrophilic polymer to form a dense rejection layer and exposing the coated membrane to a high pH solution thereby forming a hydrolyzed ultrafiltration membrane. A polymer coated hydrolyzed membrane includes a porous membrane formed from a first hydrophilic polymer by immersion precipitation and from hydrolysis and a dense rejection layer applied to the membrane and formed from a second hydrophilic polymer more pH tolerant than the first hydrophilic polymer.

No. of Pages : 13 No. of Claims : 17

(12) PATENT APPLICATION PUBLICATION
(19) INDIA
(22) Date of filing of Application :03/10/2013
(21) Application No.1847/MUMNP/2013 A
(43) Publication Date : 05/09/2014

(54) Title of the invention : ONLINE REFERENCE PATCH GENERATION AND POSE ESTIMATION FOR AUGMENTED REALITY

(51) International classification :G01S3/786,G01C11/00,G06T7/00
(31) Priority Document No :61/477524
(32) Priority Date :20/04/2011
(33) Name of priority country :U.S.A.
(86) International Application No :PCT/US2012/033100
Filing Date :11/04/2012
(87) International Publication No :WO 2012/145210
(61) Patent of Addition to Application Number :NA
Filing Date :NA
(62) Divisional to Application Number :NA
Filing Date :NA

(71)**Name of Applicant :**
1)QUALCOMM Incorporated
Address of Applicant :ATTN: International IP Administration 5775 Morehouse Drive San Diego California 92121 1714 U.S.A.
(72)**Name of Inventor :**
1)JIANG Bolan
2)SWEET Charles Wheeler III
3)CHOUDHURY Prasun
4)AHUJA Dheeraj

(57) Abstract :
A reference patch of an unknown environment is generated on the fly for positioning and tracking. The reference patch is generated using a captured image of a planar object with two perpendicular sets of parallel lines. The planar object is detected in the image and axes of the world coordinate system are defined using the vanishing points for the two sets of parallel lines. The camera rotation is recovered based on the defined axes and the reference patch of at least a portion of the image of the planar object is generated using the recovered camera rotation. The reference patch can then be used for vision based detection and tracking. The planar object may be detected in the image as sets of parallel lines or as a rectangle.

No. of Pages : 33 No. of Claims : 38

(12) PATENT APPLICATION PUBLICATION
(19) INDIA
(22) Date of filing of Application :03/10/2013
(21) Application No.1848/MUMNP/2013 A
(43) Publication Date : 05/09/2014

(54) Title of the invention : METHOD AND SYSTEM FOR DEASSIGNMENT OF RESOURCES IN A WIRELESS COMMUNICATION SYSTEM

(51) International classification :H04W76/06
(31) Priority Document No :11/369,494
(32) Priority Date :07/03/2006
(33) Name of priority country :U.S.A.
(86) International Application No :PCT/US2007/063516
Filing Date :07/03/2007
(87) International Publication No :WO/2007/103990
(61) Patent of Addition to Application Number :NA
Filing Date :NA
(62) Divisional to Application Number :1731/MUMNP/2008
Filed on :12/08/2008

(71)**Name of Applicant :**
1)QUALCOMM INCORPORATED
Address of Applicant :Attn: International IP Administration, 5775 Morehouse Drive, San Diego, California 92121-1714, United States of America
(72)**Name of Inventor :**
1)GOROKHOV, Alexei
2)AGRAWAL, Avneesh
3)KHANDEKAR, Aamod

(57) Abstract :
Systems and methods are disclosed that facilitate dynamically de-assigning resources and communication channels for transmitting messages indicative of resource de-assigning. Systems and method for generating and interpreting de-assignment messages are also provided.

No. of Pages : 35 No. of Claims : 2

(12) PATENT APPLICATION PUBLICATION
(19) INDIA
(22) Date of filing of Application :13/09/2013
(21) Application No.1716/MUMNP/2013 A
(43) Publication Date : 05/09/2014

(54) Title of the invention : ORGANOMODIFIED CARBOSILOXANE MONOMERS CONTAINING COMPOSITIONS AND USES THEREOF

(51) International classification :C08G77/50,C08G77/60,A01N25/10
(31) Priority Document No :NA
(32) Priority Date :NA
(33) Name of priority country :NA
(86) International Application No :PCT/US2011/029164
Filing Date :21/03/2011
(87) International Publication No :WO 2012/128751
(61) Patent of Addition to Application Number :NA
Filing Date :NA
(62) Divisional to Application Number :NA
Filing Date :NA

(71)**Name of Applicant :**
1)MOMENTIVE PERFORMANCE MATERIALS INC.
Address of Applicant :260 HUDSON RIVER ROAD, WATERFORD, NEW YORK 12188, U.S.A
(72)**Name of Inventor :**
1)SAXENA Anubhav
2)SENTHILKUMAR Umapathy
3)LEWIS Kenrick M.

(57) Abstract :
There is provided novel mono acrylate functionalized siloxane monomer containing carbosiloxane linkage for improved hydrolysis resistance. This invention also provides copolymers produced using these monomers and their use in various applications.

No. of Pages : 39 No. of Claims : 26

(12) PATENT APPLICATION PUBLICATION
(21) Application No.1717/MUMNP/2013 A
(19) INDIA
(22) Date of filing of Application :13/09/2013
(43) Publication Date : 05/09/2014

(54) Title of the invention : SILOXANE MONOMERS CONTAINING HYDROLYSIS RESISTANCE CARBOSILOXANE LINKAGE PROCESS FOR THEIR PREPARATION AND THIN FILMS CONTAINING THE SAME FOR CONTACT LENS APPLICATION

(51) International classification :C07F7/08,C08F30/08,G02B1/04
(31) Priority Document No :NA
(32) Priority Date :NA
(33) Name of priority country :NA
(86) International Application No :PCT/US2011/029165
Filing Date :21/03/2011
(87) International Publication No:WO 2012/128752
(61) Patent of Addition to Application Number :NA
Filing Date :NA
(62) Divisional to Application Number :NA
Filing Date :NA

(71)**Name of Applicant :**
1)MOMENTIVE PERFORMANCE MATERIALS INC.
Address of Applicant :260 HUDSON RIVER ROAD, WATERFORD, NEW YORK 12188, U.S.A.
(72)**Name of Inventor :**
1)SAXENA Anubhav
2)SENTHILKUMAR Umapathy
3)LEWIS Kenrick M.

(57) Abstract :
There is provided new mono (meth)acrylate functionalized silicone monomers containing carbosiloxane linkage for improved hydrolysis resistance useful in making water absorbing silicone hydrogel films for contact lens applications. This invention also provides homo polymers and copolymers made from the mono (meth)acrylate functionalized hydrophilic silicone monomers described herein. Also provided is a process for producing the monomers and polymers described herein and contact lenses produced from the same.

No. of Pages : 37 No. of Claims : 38

(12) PATENT APPLICATION PUBLICATION
(19) INDIA
(22) Date of filing of Application :05/10/2013
(21) Application No.1867/MUMNP/2013 A
(43) Publication Date : 05/09/2014

(54) Title of the invention : HIGH PERFORMANCE FIBROUS PRODUCTS

(51) International classification :B01D37/00,B01D39/02,B29C67/20
(31) Priority Document No :61/450407
(32) Priority Date :08/03/2011
(33) Name of priority country :U.S.A.
(86) International Application No :PCT/US2012/028054
Filing Date :07/03/2012
(87) International Publication No :WO 2012/122257
(61) Patent of Addition to Application Number :NA
Filing Date :NA
(62) Divisional to Application Number :NA
Filing Date :NA

(71)**Name of Applicant :**
1)NANOPAPER LLC
Address of Applicant :35 Spinelli Place Cambridge MA 02138 U.S.A.
(72)**Name of Inventor :**
1)JOGIKALMATH Gangadhar
2)SOANE David S.

(57) Abstract :
The invention relates to formulations and methods for coating a fibrous web comprising an emulsion capable of deposition on the fibrous web the emulsion comprising an aqueous continuous phase and a discontinuous internal phase comprising a surface modifying agent. The fibrous web may comprise a population of fibers that are pretreated with a pretreatment polymer such as a polycationic polymer. The fibrous web may contain cellulose fibers or two populations of dissimilar fibers. The surface modifying agent may contain a polymeric system that forms a coating polymer on fibers of the fibrous web following evaporation of the aqueous continuous phase of the emulsion.

No. of Pages : 20 No. of Claims : 16

(12) PATENT APPLICATION PUBLICATION
(21) Application No.1868/MUMNP/2013 A
(19) INDIA
(22) Date of filing of Application :05/10/2013
(43) Publication Date : 05/09/2014

(54) Title of the invention : PRESSURE GOVERNOR AND AIR DRYER

(51) International classification :F16K11/22,B01D53/26
(31) Priority Document No :2011068260
(32) Priority Date :25/03/2011
(33) Name of priority country :Japan
(86) International Application No :PCT/JP2012/056280
Filing Date :12/03/2012
(87) International Publication No :WO 2012/132859
(61) Patent of Addition to Application Number :NA
Filing Date :NA
(62) Divisional to Application Number :NA
Filing Date :NA

(71)**Name of Applicant :**
1)NABTESCO AUTOMOTIVE CORPORATION
Address of Applicant :7 9 Hirakawacho 2 chome Chiyoda ku Tokyo 1020093 Japan
(72)**Name of Inventor :**
1)MINATO Ichirou

(57) Abstract :
The present invention addresses the problem of obtaining a pressure governor capable of defining both the release pressure and the intake pressure easily with high accuracy and capable of contributing the reduction of cost by the simplified structure thereof. To this end a pressure governor (4) is provided with a first valve (11) that defines the intake pressure and a second valve (12) that defines the release pressure. A first valve housing chamber (10a) in which the first valve (11) is housed and a second valve housing chamber (10b) in which the second valve (12) is housed are formed independently of each other. Consequently both the valves are fabricated more easily without having to be coaxially formed thereby making it possible to produce the respective valves easily with high accuracy.

No. of Pages : 58 No. of Claims : 7

(12) PATENT APPLICATION PUBLICATION
(19) INDIA
(22) Date of filing of Application :05/10/2013
(21) Application No.1869/MUMNP/2013 A
(43) Publication Date : 05/09/2014

(54) Title of the invention : LED ARRAY LIGHTING ASSEMBLY

(51) International classification :F21V8/00,F21V5/04
(31) Priority Document No :61/473576
(32) Priority Date :08/04/2011
(33) Name of priority country :U.S.A.
(86) International Application No :PCT/US2012/032660
Filing Date :07/04/2012
(87) International Publication No :WO 2012/148651
(61) Patent of Addition to Application Number :NA
Filing Date :NA
(62) Divisional to Application Number :NA
Filing Date :NA

(71)**Name of Applicant :**
1)BRITE SHOT INC.
Address of Applicant :#220 600 West Hillsboro Boulevard Deerfield Beach Florida 33441 U.S.A.
(72)**Name of Inventor :**
1)TICKTIN Peter

(57) Abstract :
A lighting assembly includes a plurality of LED light sources and a light guide assembly featuring a plurality of light guides with a proximal end and a distal end opposite the proximal end. The light guide assembly further includes mating cap coupled to the proximal end of the plurality of light guides and that aligns recesses in the light guides with a corresponding LED light source in the plurality of LED light sources. A light emitting lens has a receiving surface coupled to the distal end of each of the plurality of light guides and transfers light emitted from the distal end of each of the plurality of light guides into the light emitting lens and a curved light emitting surface that is able to emit light from within the light emitting lens the light within the light emitting lens being a blend of light emitted from least two of the plurality of light guides.

No. of Pages : 66 No. of Claims : 20

(12) PATENT APPLICATION PUBLICATION
(21) Application No.2514/MUMNP/2012 A
(19) INDIA
(22) Date of filing of Application :02/11/2012
(43) Publication Date : 05/09/2014

(54) Title of the invention : TEMPLATED ISLET CELLS AND SMALL ISLET CELL CLUSTERS FOR DIABETES TREATMENT

(51) International classification	:A61K47/30, A61K9/00, A61K47/48	(71)**Name of Applicant :** **1)RAMACHANDRAN, KARTHIK** Address of Applicant :2002 W.39TH AVE; KANSAS CITY, KANSAS CITY,KANSAS 66103,. U.S.A.
(31) Priority Document No	:12/798,529	(72)**Name of Inventor :**
(32) Priority Date	:06/04/2010	**1)BERKLAND Cory**
(33) Name of priority country	:U.S.A.	**2)STEHNO-BITTEL Lisa A.**
(86) International Application No	:PCT/US2011/030775	**3)SIAHAAN Teruna**
Filing Date	:31/03/2011	**4)RAMACHANDRAN Karthik**
(87) International Publication No	:WO/2011/126921	
(61) Patent of Addition to Application Number	:NA	
Filing Date	:NA	
(62) Divisional to Application Number	:NA	
Filing Date	:NA	

(57) Abstract :
A scaffold having islet cells or small islet cell clusters attached thereto in a multilayer and a micro-mold having divots for culturing islets wherein islet formation is influenced by the shape and dimensions of the divots are disclosed

No. of Pages : 109 No. of Claims : 25

(12) PATENT APPLICATION PUBLICATION
(19) INDIA
(22) Date of filing of Application :07/08/2013
(21) Application No.1521/MUMNP/2013 A
(43) Publication Date : 05/09/2014

(54) Title of the invention : THREADED COUPLING FOR PIPE

(51) International classification :F16L15/04
(31) Priority Document No :2011-042602
(32) Priority Date :28/02/2011
(33) Name of priority country :Japan
(86) International Application No :PCT/JP2012/055292
Filing Date :24/02/2012
(87) International Publication No :WO 2012/118167
(61) Patent of Addition to Application Number :NA
Filing Date :NA
(62) Divisional to Application Number :NA
Filing Date :NA

(71)**Name of Applicant :**
1)JFE STEEL CORPORATION
Address of Applicant :2 3Uchisaiwai cho 2 chome Chiyoda ku Tokyo 1000011 Japan
(72)**Name of Inventor :**
1)KAWAI Takamasa
2)TAKAHASHI Kazunari
3)CHIKATSUNE Hiroshi
4)YOSHIKAWA Masaki
5)TAKANO Jun
6)NAGAHAMA Takuya
7)UETA Masateru
8)SONOBE Osamu

(57) Abstract :
Radial seal type threaded joints for steel pipes have still room for improvement in ensuring sealability in terms of the rigidity of the pin nose. Specifically, the outer circumferential surface of the nose 8 of the pin 3 has an outward convex curved shape, and the sealing surface of the box 1 has a tapered shape; and the croas-sectional area of the pin 3 at a seal point sp that is a portion on the outer circumferential surface of the nose 8 of the pin 3, the portion first coning into contact with the sealing surface of the box 1 when threaded-joined, is 35% or more of the cross-sectional area of an original pipe portion corresponding to an unprocessed portion,

No. of Pages : 29 No. of Claims : 2

(12) PATENT APPLICATION PUBLICATION
(19) INDIA
(22) Date of filing of Application :30/11/2012
(21) Application No.2672/MUMNP/2012 A
(43) Publication Date : 05/09/2014

(54) Title of the invention : METHODS OF TREATING DIABETES AND COMPOSITIONS CAPABLE OF SAME

(51) International classification	:A61K38/17, A61P5/48
(31) Priority Document No	:61/350,943
(32) Priority Date	:03/06/2010
(33) Name of priority country	:U.S.A.
(86) International Application No	:PCT/IL2011/000436
Filing Date	:02/06/2011
(87) International Publication No	: NA
(61) Patent of Addition to Application Number	:NA
Filing Date	:NA
(62) Divisional to Application Number	:NA
Filing Date	:NA

(71)**Name of Applicant :**
1)Ramot at Tel-Aviv University Ltd.
Address of Applicant :P.O. Box 39296 61392 Tel-Aviv Israel.
(72)**Name of Inventor :**
1)BRAM Yaron
2)GAZIT Ehud

(57) Abstract :
A composition of matter is disclosed which comprises isolated oligomers of human islet amyloid polypeptide (IAPP). Antibodies recognizing same are also disclosed. Use of the composition of matter and the antibodies are also disclosed.

No. of Pages : 74 No. of Claims : 30

(12) PATENT APPLICATION PUBLICATION
(21) Application No.2673/MUMNP/2012 A
(19) INDIA
(22) Date of filing of Application :30/11/2012
(43) Publication Date : 05/09/2014

(54) Title of the invention : IMPROVED WINDOW REVEAL SYSTEMS AND METHODS

(51) International classification :E06B3/00
(31) Priority Document No :12/793,536
(32) Priority Date :03/06/2010
(33) Name of priority country :U.S.A.
(86) International Application No :PCT/US2011/038963
Filing Date :02/06/2011
(87) International Publication No :WO/2011/153375
(61) Patent of Addition to Application Number :NA
Filing Date :NA
(62) Divisional to Application Number :NA
Filing Date :NA

(71)**Name of Applicant :**
1)PERFECT WINDOW REVEAL LLC
Address of Applicant :848 N RAINBOW BLVD #343, LAS VEGAS, NV 89107-1103, USA
(72)**Name of Inventor :**
1)MATTA Greg

(57) Abstract :
A window reveal kit can include a window a first connector and at least one reveal trim. The window has an outer side an inner side and a frame portion about a perimeter of the window. The first connector can be formed on the frame portion on the inner side of the window. The at least one reveal trim can have a second connector that is configured to engage the first connector so that the reveal trim extends from the first connector.

No. of Pages : 45 No. of Claims : 19

(12) PATENT APPLICATION PUBLICATION
(21) Application No.1862/MUMNP/2013 A
(19) INDIA
(22) Date of filing of Application :04/10/2013
(43) Publication Date : 05/09/2014

(54) Title of the invention : COATED ABRASIVE PRODUCTS CONTAINING AGGREGATES.

(51) International classification :C09K 3/14
(31) Priority Document No :60/897,023
(32) Priority Date :23/01/2007
(33) Name of priority country :U.S.A.
(86) International Application No :PCT/US2008/051785
Filing Date :23/01/2008
(87) International Publication No :WO/2008/091939
(61) Patent of Addition to Application Number :NA
Filing Date :NA
(62) Divisional to Application Number :1361/MUMNP/2009
Filed on :20/07/2009

(71)**Name of Applicant :**
1)SAINT-GOBAIN ABRASIVES, INC.
Address of Applicant :ONE NEW BOND STREET, WORCESTER, MA 01615-0138, U.S.A.
2)SAINT-GOBAIN ABRASIFS
(72)**Name of Inventor :**
1)STARLING SHELLY, C.

(57) Abstract :
A coated abrasive product includes a particulate material containing green, unfired abrasive aggregates having a generally spheroidal or toroidal shape, the aggregates formed from a composition comprising abrasive grit particles and a nanoparticle binder. Free abrasive products, bonded abrasive products, and the particulate material also contain aggregates.

No. of Pages : 55 No. of Claims : 13

(12) PATENT APPLICATION PUBLICATION
(19) INDIA
(22) Date of filing of Application :04/10/2013
(21) Application No.1863/MUMNP/2013 A
(43) Publication Date : 05/09/2014

(54) Title of the invention : SYSTEM AND METHOD FOR REMOTE BIOMETRIC OPERATIONS

(51) International classification :H04L9/08,H04L9/32,H04L1/16
(31) Priority Document No :11382113.6
(32) Priority Date :15/04/2011
(33) Name of priority country :EPO
(86) International Application No :PCT/ES2012/070140
Filing Date :06/03/2012
(87) International Publication No :WO 2012/140291
(61) Patent of Addition to Application Number :NA
Filing Date :NA
(62) Divisional to Application Number :NA
Filing Date :NA

(71)**Name of Applicant :**
1)HANSCAN IP B.V.
Address of Applicant :Prins Bernhardplein 200 NL 1097 JB Amsterdam Netherlands
(72)**Name of Inventor :**
1)ANTEQUERA RODRIGUEZ Nicolas
2)LOPEZ RAMOS Juan Antonio

(57) Abstract :
System for remote biometric operations which comprises a biometric data reading device connected to a personal computer and configured to send said encrypted data to a remote data authentication centre in order to establish a secure communication channel once the identity of the user has been verified via said biometric data. The present invention relates to a system for remote biometric operations which system can be connected to a computer such that tasks can be carried out with a certain degree of security such as electronic banking among others.

No. of Pages : 14 No. of Claims : 3

(12) PATENT APPLICATION PUBLICATION
(21) Application No.1864/MUMNP/2013 A
(19) INDIA
(22) Date of filing of Application :04/10/2013
(43) Publication Date : 05/09/2014

(54) Title of the invention : EXTINGUISHING CONTAINER AND METHOD FOR PROVIDING SAID EXTINGUISHING CONTAINER IN A SERVICEABLE MANNER

(51) International classification :A62C3/02
(31) Priority Document No :20 2011 003 933.1
(32) Priority Date :14/03/2011
(33) Name of priority country :Germany
(86) International Application No :PCT/DE2011/002003
Filing Date :21/11/2011
(87) International Publication No :WO 2012/122957
(61) Patent of Addition to Application Number :NA
Filing Date :NA
(62) Divisional to Application Number :NA
Filing Date :NA

(71)**Name of Applicant :**
1)SCHMIDT Silvia
Address of Applicant :K¼ppers Hof 24 48117 Oberhausen Germany
(72)**Name of Inventor :**
1)SCHMIDT Silvia

(57) Abstract :
The invention relates to an extinguishing container (1) having a closable filling opening (2) for liquid extinguishing agent. Said extinguishing container is characterized by deformability in an unfilled storage state (3) and dimensional stability in an operating state (4) in which the extinguishing container is filled with extinguishing agent wherein the deformability decreases with an increasing filling degree and by a compartment (6) for accommodating blasting agent. Said compartment is arranged in the container interior (5) at least in the operating state (4) and comprises a closable opening (7) on or outside of the outer surface (8) of the extinguishing container (1). The invention further relates to a method for providing serviceable extinguishing containers for aerial firefighting characterized by the transformation of one or more extinguishing containers (1) according to the invention from the storage state (3) thereof to the operating state (4) in the first step as well as the placement of a blasting agent in the compartment (6) and the attachment of an igniter for the blasting agent.

No. of Pages : 21 No. of Claims : 14

(12) PATENT APPLICATION PUBLICATION
(19) INDIA
(22) Date of filing of Application :04/10/2013
(21) Application No.1866/MUMNP/2013 A
(43) Publication Date : 05/09/2014

(54) Title of the invention : PRISMATIC PRESSURE TANK HAVING LATTICE STRUCTURE

(51) International classification :F17C1/08,F17C1/02
(31) Priority Document No :1020110038676
(32) Priority Date :25/04/2011
(33) Name of priority country :Republic of Korea
(86) International Application No :PCT/KR2012/003157
Filing Date :25/04/2012
(87) International Publication No :WO 2012/148154
(61) Patent of Addition to Application Number :NA
Filing Date :NA
(62) Divisional to Application Number :NA
Filing Date :NA

(71)**Name of Applicant :**
1)KOREA ADVANCED INSTITUTE OF SCIENCE AND TECHNOLOGY
Address of Applicant :373 1 Guseong dong Yuseong gu Daejeon 305 701 Republic of Korea
(72)**Name of Inventor :**
1)CHANG Dae Jun
2)BERGAN Pal G

(57) Abstract :
Provided is a pressure tank having a lattice structure including: a tank body that has a high pressure fluid accommodated therein and is manufactured to have a prismatic shape; and cell structures that are disposed in the prismatic tank body are manufactured in a lattice form arrive from one side wall of the tank body to the other side wall thereof facing it and are orthogonally arranged regularly.

No. of Pages : 36 No. of Claims : 31

(12) PATENT APPLICATION PUBLICATION
(19) INDIA
(22) Date of filing of Application :31/07/2012
(21) Application No.2195/MUM/2012 A
(43) Publication Date : 05/09/2014

(54) Title of the invention : IDENTIFICATION OF SURROGATE PROTEIN MARKERS FOR FALCIPARUM AND VIVAX MALARIA USING PROTEOMIC APPROACHES

(51) International classification	:G01N33/68, G01N33/50, G01N33/566
(31) Priority Document No	:NA
(32) Priority Date	:NA
(33) Name of priority country	:NA
(86) International Application No	:NA
Filing Date	:NA
(87) International Publication No	:N/A
(61) Patent of Addition to Application Number	:NA
Filing Date	:NA
(62) Divisional to Application Number	:NA
Filing Date	:NA

(71)**Name of Applicant :**
1)INDIAN INSTITUTE OF TECHNOLOGY,BOMBAY
Address of Applicant :POWAI, MUMBAI-400076, MAHARASHTRA, INDIA
(72)**Name of Inventor :**
1)PROF. SANJEEVA SRIVASTAVA
2)PROF. SWATI PATANKAR
3)MR. SANDIPAN RAY
4)DR. URMILA THATTE
5)DR. NITHYA GOGTAY
6)DR. DURAIRAJ RENU
7)DR. JYOTI BAJPAI DIKSHIT
8)DR. KALYANASUNDARAM SUBRAMANIAN
9)DR. SANTOSH TAUR

(57) Abstract :
PROTEIN BIOMARKERS FOR FALCIPARUM AND VIVAX MALARIA The present application is related to a panel of protein biomarkers for malaria, in particular the present invention relates to a panel of biomarkers for falciparum, and vivax malaria, and their potential for development of a kit for identification of these biomarkers in a sample.

No. of Pages : 57 No. of Claims : 12

(12) PATENT APPLICATION PUBLICATION
(21) Application No.1901/MUMNP/2013 A
(19) INDIA
(22) Date of filing of Application :03/10/2013
(43) Publication Date : 05/09/2014

(54) Title of the invention : COMPACT RECYCLABLE MULTI LAYERED DENTAL FLOSSING DEVICE AND PACKAGING THEREFORE

(51) International classification :A61C15/04
(31) Priority Document No :61/517444
(32) Priority Date :20/04/2011
(33) Name of priority country :U.S.A.
(86) International Application No :PCT/US2012/034392
Filing Date :20/04/2012
(87) International Publication No :WO 2012/145589
(61) Patent of Addition to Application Number :NA
Filing Date :NA
(62) Divisional to Application Number :NA
Filing Date :NA

(71)**Name of Applicant :**
1)EWING William
Address of Applicant :475 Highland Road P.O. Box 223 Tiverton Rhode Island 02878 U.S.A.
(72)**Name of Inventor :**
1)EWING William

(57) Abstract :
A compact recyclable dental flossing device in the form of a multi layered elongated filament or strip of a resin which has physical characteristics such that when elongated or drawn to stop possesses a substantially increased length and tensile strength and a reduced thickness suitable for flossing teeth

No. of Pages : 32 No. of Claims : 20

(12) PATENT APPLICATION PUBLICATION
(19) INDIA
(22) Date of filing of Application :09/10/2012
(21) Application No.2369/MUMNP/2012 A
(43) Publication Date : 05/09/2014

(54) Title of the invention : USE OF STREPTOCOCCUS SALIVARIUS IN THE TREATMENT OF CHRONIC INFECTIONS OF THE RESPIRATORY TRACT

(51) International classification :A61K35/74,A61P 11/00
(31) Priority Document No :RM2010A000163
(32) Priority Date :07/04/2010
(33) Name of priority country :Italy
(86) International Application No :PCT/IT2011/000104
Filing Date :07/04/2011
(87) International Publication No :WO/2011/125086
(61) Patent of Addition to Application Number :NA
Filing Date :NA
(62) Divisional to Application Number :NA
Filing Date :NA

(71)**Name of Applicant :**
1)D.M.G. ITALIA Srl
Address of Applicant :Via Laurentina Km. 26 700 I-00040 Pomezia (Rome) Italy.
(72)**Name of Inventor :**
1)STEFANI Stefania
2)TIBERI Licia
3)SANTAGATI Maria

(57) Abstract :
The present invention provides a new microbial strain of the species Streptococcus salivarius for use in the treatment of inflammatory processes with or without infectious etiology. A further object of the present invention compositions comprising said strain and uses thereof.

No. of Pages : 18 No. of Claims : 12

(12) PATENT APPLICATION PUBLICATION
(19) INDIA
(22) Date of filing of Application :13/11/2012
(21) Application No.2560/MUMNP/2012 A
(43) Publication Date : 05/09/2014

(54) Title of the invention : CONVEYOR

(51) International classification	:B65G47/56, B65G17/12
(31) Priority Document No	:1006075.4
(32) Priority Date	:13/04/2010
(33) Name of priority country	:U.K.
(86) International Application No	:PCT/GB2011/050721
Filing Date	:12/04/2011
(87) International Publication No	:WO/2011/128678
(61) Patent of Addition to Application Number	:NA
Filing Date	:NA
(62) Divisional to Application Number	:NA
Filing Date	:NA

(71)**Name of Applicant :**
1)GOUGH George Terah
Address of Applicant :2 Jonathan Road Trentham Stoke on Trent Staffordshire ST4 8LP United Kingdom.
(72)**Name of Inventor :**
1)GOUGH George Terah

(57) Abstract :
A conveyor such as a bucket conveyor comprising an endless belt (23) the endless belt having a length along which it is endless and comprising a plurality of generally planar sliding members (1) and a plurality of sliding couplings (6) which couple the sliding members (1) together such that each sliding member (1) can slide in a direction along the length of the endless belt over an adjacent sliding member (1) so as to vary the length of the endless belt..

No. of Pages : 24 No. of Claims : 13

(12) PATENT APPLICATION PUBLICATION
(21) Application No.2665/MUM/2012 A
(19) INDIA
(22) Date of filing of Application :27/09/2012
(43) Publication Date : 05/09/2014

(54) Title of the invention : A MODIFIED FUEL AND KIT FOR BI-FUEL VEHICLES

(51) International classification	:F02D19/08, F02D41/02
(31) Priority Document No	:NA
(32) Priority Date	:NA
(33) Name of priority country	:NA
(86) International Application No	:NA
Filing Date	:NA
(87) International Publication No	: NA
(61) Patent of Addition to Application Number	:NA
Filing Date	:NA
(62) Divisional to Application Number	:NA
Filing Date	:NA

(71)**Name of Applicant :**
1)OFFICINE LOVATO PRIVATE LIMITED
Address of Applicant :UNIT NO. 101, 1ST FLOOR, KAMLA EXECUTIVE PARK, MIDC, ANDHERI (E), MUMBAI 400059. Maharashtra India
(72)**Name of Inventor :**
1)CARLO GARDELLA

(57) Abstract :
The present invention relates to a modified fuel tank for use with two wheeler vehicle such as a motorcycle adapted to run on compressed natural gas. More particularly, the present invention provides a modified fuel tank as shown in Fig 2, which can be mounted in place of a conventional fuel tank on a motorcycle, said modified fuel tank (5) comprising an outer surface (10) and an inner curved surface (11), a fuel reservoir (12) centrally located on the inner surface of the modified fuel tank, a cavity (13, 14) on either side of the fuel reservoir said cavities defined by the walls of the fuel reservoir and the inner curved surface of the modified fuel tank.

No. of Pages : 18 No. of Claims : 11

(12) PATENT APPLICATION PUBLICATION
(19) INDIA
(22) Date of filing of Application :12/12/2012
(21) Application No.10355/CHENP/2012 A
(43) Publication Date : 05/09/2014

(54) Title of the invention : NOVEL CYCLIC PEPTIDE COMPOUND METHOD FOR PRODUCING SAME ANTI INFECTIVE AGENT ANTIBIOTIC CONTAINING FRACTION ANTIBIOTIC METHOD FOR PRODUCING ANTIBIOTIC ANTIBIOTIC PRODUCING MICROORGANISM AND ANTIBIOTIC PRODUCED BY SAME

(51) International classification :C07K7/56,A61K38/00,A61P31/04
(31) Priority Document No :2010119138
(32) Priority Date :25/05/2010
(33) Name of priority country :Japan
(86) International Application No :PCT/JP2011/061928
Filing Date :25/05/2011
(87) International Publication No :WO 2011/148959
(61) Patent of Addition to Application Number :NA
Filing Date :NA
(62) Divisional to Application Number :NA
Filing Date :NA

(71)**Name of Applicant :**
1)Genome Pharmaceuticals Institute Co. Ltd.
Address of Applicant :27 8 1207 Hongo 1 chome Bunkyo ku Tokyo 1130033 Japan
2)The University of Tokyo
(72)**Name of Inventor :**
1)SEKIMIZU Kazuhisa
2)HAMAMOTO Hiroshi
3)MURAKAMI Kazuhisa

(57) Abstract :
Disclosed are a novel compound which has a chemical structure different from that of a conventional medicament a novel microorganism which produces the novel compound and a novel compound which is also effective in multidrug resistant bacteria. Also disclosed is a novel compound which has a high therapeutic effect and can be expected to have a low hurdle for practical application by selecting a target compound from a lot of candidate compounds through evaluation for not only an antibacterial activity but also for a therapeutic effect. More specifically disclosed are a cyclic peptide compound represented by formula (1) (wherein R represents an acyl group having 7 8 or 9 carbon atoms which may have a substituent; R represents a methyl group or a hydrogen atom; and R represents an ethyl group or a methyl group) or a pharmaceutically acceptable salt thereof and a microorganism having an accession number of NITE BP 870 or a naturally or artificially mutated microorganism thereof.

No. of Pages : 114 No. of Claims : 30

(12) PATENT APPLICATION PUBLICATION
(19) INDIA
(22) Date of filing of Application :05/03/2013
(21) Application No.1779/CHENP/2013 A
(43) Publication Date : 05/09/2014

(54) Title of the invention : NEMATOCIDAL COMPOSITION COMPRISING BACILLUS SUBTILIS AND BACILLUS LICHENIFORMIS

(51) International classification :A01N63/00,C12N1/20,C12R1/125
(31) Priority Document No :10172373.2
(32) Priority Date :10/08/2010
(33) Name of priority country :EPO
(86) International Application No :PCT/EP2011/063685
Filing Date :09/08/2011
(87) International Publication No :WO 2012/020014
(61) Patent of Addition to Application Number :NA
Filing Date :NA
(62) Divisional to Application Number :NA
Filing Date :NA

(71)**Name of Applicant :**
1)CHR. HANSEN A/S
Address of Applicant :Boege Alle 10 12 DK 2970 Hoersholm Denmark
(72)**Name of Inventor :**
1)ALESSANDRI Abilio
2)KNAP Inge
3)SEKITO DE FREITAS ZAMBELLI Luciana

(57) Abstract :
Bacillus subtilisBacillus licheniformisBacillus subtilisBacillus licheniformisThe present invention refers to a composition comprising (DSM 17231) and (DSM 17236) with nematicidal effect against phytonematodes on plants and/or its habitat to its use and process for its preparation use of (DSM 17231) and (DSM 17236) processes for controlling combating and conferring specific resistance to phytonematodes and a kit.

No. of Pages : 35 No. of Claims : 11

(12) PATENT APPLICATION PUBLICATION
(19) INDIA
(22) Date of filing of Application :05/03/2013
(21) Application No.1780/CHENP/2013 A
(43) Publication Date : 05/09/2014

(54) Title of the invention : PROCESS AND APPARATUS FOR THE GAS PHASE POLYMERIZATION OF OLEFINS

(51) International classification :B01J8/00,B01J8/18,B01J8/24
(31) Priority Document No :10175919.9
(32) Priority Date :09/09/2010
(33) Name of priority country :EPO
(86) International Application No :PCT/EP2011/065210
Filing Date :02/09/2011
(87) International Publication No :WO 2012/031986
(61) Patent of Addition to Application Number :NA
Filing Date :NA
(62) Divisional to Application Number :NA
Filing Date :NA

(71)**Name of Applicant :**
1)BASELL POLIOLEFINE ITALIA S.R.L.
Address of Applicant :Via Soperga 14/A I 20127 Milano Italy
(72)**Name of Inventor :**
1)SOFFRITTI Silvia
2)RINALDI Riccardo
3)DORINI Maurizio
4)PENZO Giuseppe

(57) Abstract :
A gas phase polymerization reactor having interconnected polymerization zones comprising: a riser through which the polymer particles flow upwards under fast fluidization conditions or transport conditions; a dowcomer through which the polymer particles flow downward in a densified form under the action of gravity the bottom of said downcomer being connected to the lower region of said riser by means of a transport section said transport section being designed as a bend descending from the downcomer to the riser.

No. of Pages : 26 No. of Claims : 15

(12) PATENT APPLICATION PUBLICATION
(19) INDIA
(22) Date of filing of Application :12/03/2013
(21) Application No.1961/CHENP/2013 A
(43) Publication Date : 05/09/2014

(54) Title of the invention : BEARING STEEL

(51) International classification :C22C38/00,C22C38/60,C21D6/00
(31) Priority Document No :2010207163
(32) Priority Date :15/09/2010
(33) Name of priority country :Japan
(86) International Application No :PCT/JP2011/066847
Filing Date :25/07/2011
(87) International Publication No :WO 2012/035884
(61) Patent of Addition to Application Number :NA
Filing Date :NA
(62) Divisional to Application Number :NA
Filing Date :NA

(71)**Name of Applicant :**
1)KABUSHIKI KAISHA KOBE SEIKO SHO
Address of Applicant :10 26 Wakinohama cho 2 chome Chuo ku Kobe shi Hyogo 6518585 Japan
(72)**Name of Inventor :**
1)KAIZUKA Masaki
2)NAGAHAMA Mutsuhisa

(57) Abstract :
This bearing steel which can exert favorable cold working properties during cold working that is conducted after globularizing annealing and which can also secure favorable rolling fatigue characteristics and abrasion resistance as a bearing member or the like contains 0.9 1.10% C 0.05 0.49% Si 0.1 1.0% Mn no greater than 0.05% P (but does not contain 0%) no greater than 0.05% S (but does not contain 0%) 0.03 0.40% Cr no greater than 0.05% Al (but does not contain 0%) 0.002 0.025% N no greater than 0.0030% Ti (but does not contain 0%) and no greater than 0.0025% O (but does not contain 0%) the remainder comprising iron and unavoidable impurities the average aspect ratio of cementite is no greater than 2.00 the average circle equivalent diameter of cementite is 0.35 0.6 µm and the number density of cementite having a circle equivalent diameter of at least 0.13 µm is at least 0.45/µm.

No. of Pages : 41 No. of Claims : 3

(12) PATENT APPLICATION PUBLICATION
(19) INDIA
(22) Date of filing of Application :01/01/2013
(21) Application No.16/CHENP/2013 A
(43) Publication Date : 05/09/2014

(54) Title of the invention : SAFETY DEVICE FOR A PRE FILLED SYRINGE AND INJECTION DEVICE

(51) International classification :A61M5/32,A61M5/50,A61M5/28
(31) Priority Document No :10168317.5
(32) Priority Date :02/07/2010
(33) Name of priority country :EPO
(86) International Application No :PCT/EP2011/060319
Filing Date :21/06/2011
(87) International Publication No :WO 2012/000835
(61) Patent of Addition to Application Number :NA
Filing Date :NA
(62) Divisional to Application Number :NA
Filing Date :NA

(71)**Name of Applicant :**
1)SANOFI AVENTIS DEUTSCHLAND GMBH
Address of Applicant :Br¼ningstrae 50 65929 Frankfurt Germany
(72)**Name of Inventor :**
1)ROBERTS Gareth
2)WARD Chris
3)EKMAN Matthew

(57) Abstract :
According to the invention a safety device (1) for a pre filled syringe (2) comprises a hollow support body (1.2) for mounting the pre filled syringe (2) therein a hollow needle shield (1.1) that is slidable relative to the support body (1.2) and guiding means for guiding the movement of the needle shield (1.1) relative to the support body (1.2). The guiding means comprise a flexible arm (1.1.4) with a guide pin (1.1.3) a guide track (1.2.5) and a separating wall (1.2.6). The guide pin (1.1.3) extends from the flexible arm (1.14) in a radial direction and protrudes into the guide track (1.2.5). The separating wall (1.2.6) extends into the guide track (1.2.5) in a direction parallel to a central axis (A) of the safety device (1). When the needle shield (1.1) is slid relative to the support body (1.2) the guide pin (1.1.3) moves along the guide track (1.2.5) to deflect the flexible arm (1.1.4) in a lateral direction (L) perpendicular to the central axis (A) and the movement of the guide pin (1.1.3) along the guide track (1.2.5) is guided by the interplay of the flexible arm (1.1.4) and the separating wall (1.2.6).

No. of Pages : 38 No. of Claims : 18

(12) PATENT APPLICATION PUBLICATION
(19) INDIA
(22) Date of filing of Application :05/03/2013
(21) Application No.1775/CHENP/2013 A
(43) Publication Date : 05/09/2014

(54) Title of the invention : VACUUM INSULATION MATERIAL AND METHOD FOR PRODUCING SAME

(51) International classification :F16L59/06
(31) Priority Document No :2010209120
(32) Priority Date :17/09/2010
(33) Name of priority country :Japan
(86) International Application No :PCT/JP2010/068948
Filing Date :26/10/2010
(87) International Publication No :WO 2012/035671
(61) Patent of Addition to Application Number :NA
Filing Date :NA
(62) Divisional to Application Number :NA
Filing Date :NA

(71)**Name of Applicant :**
1)Fuji Electric Co. Ltd.
Address of Applicant :1 1 Tanabeshinden Kawasaki ku Kawasaki shi Kanagawa 2100856 Japan
(72)**Name of Inventor :**
1)DENO Hiroshi

(57) Abstract :
Provided are: a vacuum insulation material having superior insulation properties even in high temperature environments and having superior insulation properties over the long term; and a method for producing the vacuum insulation material. A core starting material composition containing a talc based clay mineral a potassium compound selected from potassium carbonate and potassium bicarbonate and water is formed into a predetermined shape and is baked at a temperature that is less than the melting point of the talc based clay mineral the layered structure of the talc based clay mineral is cleaved producing a core material comprising a porous baked body wherein at least a portion thereof is partially bonded and the core material is vacuum packaged in a gas barrier packaging producing the vacuum insulation material.

No. of Pages : 39 No. of Claims : 14

(12) PATENT APPLICATION PUBLICATION
(21) Application No.1960/CHENP/2013 A
(19) INDIA
(22) Date of filing of Application :12/03/2013
(43) Publication Date : 05/09/2014

(54) Title of the invention : METHOD AND APPARATUS FOR NON ADAPTIVE RETRANSMISSION

(51) International classification :H04L1/18,H04L5/02
(31) Priority Document No :201010255621.6
(32) Priority Date :17/08/2010
(33) Name of priority country :China
(86) International Application No :PCT/IB2011/002071
Filing Date :29/07/2011
(87) International Publication No :WO 2012/023036
(61) Patent of Addition to Application Number :NA
Filing Date :NA
(62) Divisional to Application Number :NA
Filing Date :NA

(71)**Name of Applicant :**
1)ALCATEL LUCENT
Address of Applicant :3 avenue Octave Grard F 75007 Paris France
(72)**Name of Inventor :**
1)ZHU Xudong
2)LIU Jin

(57) Abstract :
The present invention provides a method and apparatus for use in non adaptive retransmission. The method comprises: configuring an uplink UL demodulation reference signal DM RS for retransmission in response to a retransmission request. In one embodiment the demodulation reference signal DM RS is configured to be the same as a demodulation reference signal for an initial transmission. In another embodiment the demodulation reference signal DM RS is configured with respect to the number of layer(s) for retransmission according to predetermined rules for the initial transmission.

No. of Pages : 26 No. of Claims : 14

(12) PATENT APPLICATION PUBLICATION
(19) INDIA
(22) Date of filing of Application :18/03/2013
(21) Application No.2145/CHENP/2013 A
(43) Publication Date : 05/09/2014

(54) Title of the invention : FINE PARTICLES FOR CHROMATOGRAPHY AND CHROMATOGRAPHY USING SAME

(51) International classification	:C08F292/00,G01N30/02,G01N30/26
(31) Priority Document No	:2010184961
(32) Priority Date	:20/08/2010
(33) Name of priority country	:Japan
(86) International Application No	:PCT/JP2011/068795
Filing Date	:19/08/2011
(87) International Publication No	:WO 2012/023615
(61) Patent of Addition to Application Number	:NA
Filing Date	:NA
(62) Divisional to Application Number	:NA
Filing Date	:NA

(71)**Name of Applicant :**
1)DAICEL CORPORATION
Address of Applicant :4 5 Umeda 3 chome Kita ku Osaka shi Osaka 5300001 Japan
(72)**Name of Inventor :**
1)OKANO Yoshimichi
2)TAKARAGI Akira
3)KITAGAWA Tomoki
4)OHNISHI Atsushi
5)MIYAMOTO Shouji

(57) Abstract :
The present invention provides a polymer brush-type filler which contains polymer chains at a high density and with a broad molecular weight distribution. Specifically, the present invention provides fine particles for chromatography comprising graft polymer chains obtained by grafting polymer chains via polymerization initiating groups on the surface of solid particles, wherein the graft polymer chains include specific repeating units, have a specific number average molecular weight and a specific molecular weight distribution and also have a high density of 0.03 chains/nm2 or more and 0.70 chains/nm2 or less.

No. of Pages : 113 No. of Claims : 9

(12) PATENT APPLICATION PUBLICATION
(21) Application No.1819/CHENP/2013 A
(19) INDIA
(22) Date of filing of Application :06/03/2013
(43) Publication Date : 05/09/2014

(54) Title of the invention : METHOD FOR OPERATION OF A PHOTOVOLTAIC GENERATOR AT AN OPERATING POINT OF MAXIMUM POWER

(51) International classification :G05F1/67
(31) Priority Document No :10 2010 036 966.7
(32) Priority Date :12/08/2010
(33) Name of priority country :Germany
(86) International Application No :PCT/EP2011/063878
Filing Date :11/08/2011
(87) International Publication No :WO 2012/020103
(61) Patent of Addition to Application Number :NA
Filing Date :NA
(62) Divisional to Application Number :NA
Filing Date :NA

(71)**Name of Applicant :**
1)SMA SOLAR TECHNOLOGY AG
Address of Applicant :Sonnenallee 1 34266 Niestetal Germany
(72)**Name of Inventor :**
1)BETTENWORT Gerd
2)KLEIN Jens
3)HOPF Markus

(57) Abstract :
A method for operation of a photovoltaic generator at an operating point of maximum power the method comprising the following steps: (S1) searching for a point of maximum power on the basis of systematic load variation with a side variation range (S2) setting the point of maximum power as the instantaneous operating point of the photovoltaic generator (S4) tracking of the operating point on the basis of a load variation with a narrow variation range (S5 S6) analysing of operating variables of the photovoltaic generator in order to determine the level of probability of the instantaneous operating point deviating from the point of maximum power (S7 S1) interruption of the tracking method and carrying out the search method in order to determine the point of maximum power as a function of a result of the analysis of the operating variables and (S2 S4) setting the point of maximum power as the instantaneous operating point and resuming the tracking method.

No. of Pages : 42 No. of Claims : 16

(12) PATENT APPLICATION PUBLICATION
(19) INDIA
(22) Date of filing of Application :14/03/2013
(21) Application No.2058/CHENP/2013 A
(43) Publication Date : 05/09/2014

(54) Title of the invention : INCOMPLETE FITTING PREVENTION CONNECTOR

(51) International classification :H01R13/639,H01R13/64
(31) Priority Document No :2010208267
(32) Priority Date :16/09/2010
(33) Name of priority country :Japan
(86) International Application No :PCT/JP2011/070621
Filing Date :09/09/2011
(87) International Publication No :WO 2012/036089
(61) Patent of Addition to Application Number :NA
Filing Date :NA
(62) Divisional to Application Number :NA
Filing Date :NA

(71)**Name of Applicant :**
1)YAZAKI CORPORATION
Address of Applicant :4 28 Mita 1 chome Minato ku Tokyo 1088333 Japan
(72)**Name of Inventor :**
1)OSADA Takeshi
2)TSURUTA Akihiro
3)MUKOUJIMA Nobuyuki

(57) Abstract :
Provided is an incomplete fitting prevention connector that is capable of satisfying conventional incomplete fitting prevention even if the number of terminal poles is multipolar and even if a short spring is added to a connector having a CPA and a gasket without insertion force of the short spring during short circuit removal increasing by very much. The incomplete fitting prevention connector is provided with a male connector (10) a female connector (20) and a CPA (30) attached slidably to the outside of the female connector (20). The male connector (10) is provided with a male beak (10L) the short spring (10S) and a male connector terminal (10T) and the female connector (20) is provided with both a female lock (20L) that passes over the male beak (10L) and a short circuit removal plate (20S) that is inserted between the short spring (10S) and the terminal (10T). By means of a draw in slanted surface (Le) being formed at the tip of the male beak (10L) the female lock (20L) obtains impelling force at the draw in slanted surface (Le) which reduces the insertion force of the short circuit removal plate (20S).

No. of Pages : 28 No. of Claims : 2

(12) PATENT APPLICATION PUBLICATION
(19) INDIA
(22) Date of filing of Application :19/01/2012
(21) Application No.212/CHE/2012 A
(43) Publication Date : 05/09/2014

(54) Title of the invention : LOW COST AND LIGHT WEIGHT HANDLE SHAFT FOR WINDOW

(51) International classification :E06B
(31) Priority Document No :NA
(32) Priority Date :NA
(33) Name of priority country :NA
(86) International Application No :NA
Filing Date :NA
(87) International Publication No : NA
(61) Patent of Addition to Application Number :NA
Filing Date :NA
(62) Divisional to Application Number :NA
Filing Date :NA

(71)**Name of Applicant :**
1)ADITYA AUTO PRODUCTS & ENGINEERING (INDIA) PRIVATE LIMITED
Address of Applicant :NO. 13 E, KIADB INDUSTRIAL AREA, BASHETTY HALLI, DODDABALLAPUR, BANGALORE - 561 203 Karnataka India
(72)**Name of Inventor :**
1)B. RAMACHANDRA BABU

(57) Abstract :
A window regulator assembly for raising and lowering a window of a vehicle includes a handle shaft is provided. The handle shaft includes (a) an insert includes a proximal end portion, a mid-portion, and a distal end portion, and (b) a mould that is configured to rotatably support the mid-portion of the insert. The mould includes an outer cylindrical portion proximal to the mould, an inner cylindrical portion, and an undercut portion distal to the mould. The undercut portion includes plastic and is configured to attach to a handle of the window regulator assembly. The proximal end portion is configured to drivingly engage a pinion of the window regulator assembly. :

No. of Pages : 21 No. of Claims : 10

(12) PATENT APPLICATION PUBLICATION
(21) Application No.2374/CHENP/2013 A
(19) INDIA
(22) Date of filing of Application :26/03/2013
(43) Publication Date : 05/09/2014

(54) Title of the invention : SEALING SYSTEM

(51) International classification :E21B29/10,E21B43/10
(31) Priority Document No :10174670.9
(32) Priority Date :31/08/2010
(33) Name of priority country :EPO
(86) International Application No :PCT/EP2011/064911
Filing Date :30/08/2011
(87) International Publication No :WO 2012/028616
(61) Patent of Addition to Application Number :NA
Filing Date :NA
(62) Divisional to Application Number :NA
Filing Date :NA

(71)**Name of Applicant :**
1)WELLTEC A/S
Address of Applicant :Gydevang 25 DK 3450 Aller¸d Denmark
(72)**Name of Inventor :**
1)HALLUNDB†K J¸rgen

(57) Abstract :
The present invention relates to sealing method for sealing a zone of a casing in a well the zone comprising several leaks perforations and/or weakened casing parts or other irregularities having a casing characteristic which when measured is found to be outside a predetermined interval. The sealing method comprises the steps of measuring the characteristics of the casing determining a position of the zone determining an extent of the zone in a longitudinal direction of the casing determining a part of the zone and an extent of the part whose casing characteristic when measured is within the predetermined interval the part extending in the longitudinal direction of the casing positioning a first liner overlapping the first area of the part of the casing positioning a second liner overlapping the second area of the part of the casing expanding the first liner and expanding the second liner.

No. of Pages : 29 No. of Claims : 13

(12) PATENT APPLICATION PUBLICATION
(21) Application No.1954/CHENP/2013 A
(19) INDIA
(22) Date of filing of Application :12/03/2013
(43) Publication Date : 05/09/2014

(54) Title of the invention : A METHOD FOR PRODUCING HYDROGEN FROM ETHANOL

(51) International classification :C01B3/38
(31) Priority Document No :PI 10029702
(32) Priority Date :18/08/2010
(33) Name of priority country :Brazil
(86) International Application No :PCT/BR2011/000291
Filing Date :18/08/2011
(87) International Publication No :WO 2012/031341
(61) Patent of Addition to Application Number :NA
Filing Date :NA
(62) Divisional to Application Number :NA
Filing Date :NA

(71)**Name of Applicant :**
1)PETROLEO BRASILEIRO S.A. PETROBRAS
Address of Applicant :Avenida Repºblica do Chile n°. 65 Centro CEP: 20035 900 Rio de Janeiro RJ Brazil
(72)**Name of Inventor :**
1)PONTES BITTENCOURT Roberto Carlos

(57) Abstract :
The present invention describes a method for producing a gas rich in methane and hydrogen and with an olefin content of less than 1% v/v said method completely satisfying the necessary raw material requirements for large scale production of hydrogen or synthesis gas in steam reformers which already exist in a large number of oil refineries and petrochemical plants. The invention discloses a method for producing hydrogen and synthesis gas from ethanol and water vapour using nickel based catalysts and appropriate temperature ratios HO/ethanol and H/ethanol molar ratios said invention describing a method for producing hydrogen and synthesis gas from biomass in a stable manner for long periods of time and without a decrease in catalyst performance over time allowing for industrial applicability of same in new or already existing facilities. As a solution for ethanol production the present invention claims the substitution of ZnO based catalysts and hydrotreatment in the load pre treatment unit for nickel based catalysts and process conditions described in the present invention.

No. of Pages : 28 No. of Claims : 13

(12) PATENT APPLICATION PUBLICATION
(19) INDIA
(22) Date of filing of Application :20/03/2013
(21) Application No.2207/CHENP/2013 A
(43) Publication Date : 05/09/2014

(54) Title of the invention : APPARATUS AND METHODS OF HAND IN TO A FEMTO NODE

(51) International classification :H04W36/00
(31) Priority Document No :61/383715
(32) Priority Date :16/09/2010
(33) Name of priority country :U.S.A.
(86) International Application No :PCT/US2011/051961
Filing Date :16/09/2011
(87) International Publication No :WO 2012/037476
(61) Patent of Addition to Application Number :NA
Filing Date :NA
(62) Divisional to Application Number :NA
Filing Date :NA

(71)**Name of Applicant :**
1)QUALCOMM Incorporated
Address of Applicant :Attn: International IP Administration 5775 Morehouse Drive San Diego California 92121 U.S.A.
(72)**Name of Inventor :**
1)RADULESCU Andrei Dragos
2)CHANDE Vinay
3)CHEN Jen Mei
4)NANDA Sanjiv
5)SINGH Damanjit
6)YAVUZ Mehmet

(57) Abstract :
Methods and apparatuses are provided for causing active hand in of a device from a macrocell base station to a femto node which can be an inter frequency hand in. The femto node can broadcast a beacon over an operating frequency of the macrocell base station and the macrocell base station and/or one or more network components can identify the femto node based on one or more parameters reported by the device from receiving the beacon. The beacon can be transmitted at varying powers to ensure active hand in triggering mitigate interference and/or can be powered on and off for such purposes. In addition a macrocell base station can regulate compressed mode periods during which a device can measure the femto node based on receiving information regarding device proximity to the femto node or a device can generate proximity indication messages base on measuring the beacon signals etc.

No. of Pages : 92 No. of Claims : 102

(12) PATENT APPLICATION PUBLICATION
(19) INDIA
(22) Date of filing of Application :25/03/2013
(21) Application No.2334/CHENP/2013 A
(43) Publication Date : 05/09/2014

(54) Title of the invention : METHOD FOR TREATING A GAS CONTAINING NITROGEN OXIDES (NOX) IN WHICH A COMPOSITION COMPRISING CERIUM OXIDE AND NIOBIUM OXIDE IS USED AS A CATALYST

(51) International classification :B01D53/94,B01J23/00,B01J23/20
(31) Priority Document No :1003861
(32) Priority Date :29/09/2010
(33) Name of priority country :France
(86) International Application No :PCT/EP2011/066908
Filing Date :28/09/2011
(87) International Publication No :WO 2012/041921
(61) Patent of Addition to Application Number :NA
Filing Date :NA
(62) Divisional to Application Number :NA
Filing Date :NA

(71)**Name of Applicant :**
1)RHODIA OPERATIONS
Address of Applicant :40 rue de la Haie Coq F 93300 Aubervilliers France
2)MAGNESIUM ELEKTRON LIMITED
(72)**Name of Inventor :**
1)HERNANDEZ Julien
2)ROHART Emmanuel
3)JORGE COELHO MARQUES Rui
4)HARRIS Deborah Jayne
5)JONES Clare

(57) Abstract :
The invention relates to a method for treating a gas containing nitrogen oxides (NOX) comprising a reduction reaction of the nitrogen oxides by a nitrogen containing reducing agent. The invention is characterised in that the catalyst used for the reduction reaction is a catalytic system containing a composition based on cerium oxide and comprising niobium oxide in a proportion by mass of between 2 and 20 %.

No. of Pages : 32 No. of Claims : 13

(12) PATENT APPLICATION PUBLICATION
(19) INDIA
(22) Date of filing of Application :25/03/2013
(21) Application No.2336/CHENP/2013 A
(43) Publication Date : 05/09/2014

(54) Title of the invention : CIGARETTE PACK COMPRISING A COVER THAT IS GUIDED ABOUT TWO PIVOT AXES

(51) International classification :B65D5/32,B65D5/48,B65D5/50
(31) Priority Document No :102010035939.4
(32) Priority Date :31/08/2010
(33) Name of priority country :Germany
(86) International Application No:PCT/EP2011/062943
Filing Date :27/07/2011
(87) International Publication No :WO 2012/028394
(61) Patent of Addition to Application Number :NA
Filing Date :NA
(62) Divisional to Application Number :NA
Filing Date :NA

(71)**Name of Applicant :**
1)British American Tobacco (Germany) GmbH
Address of Applicant :Alsterufer 4 20354 Hamburg Germany
(72)**Name of Inventor :**
1)AGIRBAS Erdinc

(57) Abstract :
The invention relates to a pack for smoking articles in particular cigarettes comprising a pack body (2) which is designed to receive the smoking articles and has a removal opening (1) and a pack cover (3) for closing the removal opening (1) wherein the pack cover (3) is pivotably guided about two pivot axes (6b 7b) relative to the pack body (2) by means of guide elements (4 5) during opening and closure.

No. of Pages : 19 No. of Claims : 10

(12) PATENT APPLICATION PUBLICATION
(19) INDIA
(22) Date of filing of Application :27/03/2013
(21) Application No.2400/CHENP/2013 A
(43) Publication Date : 05/09/2014

(54) Title of the invention : RADIATION CURABLE POLY(ISOBUTYLENE) ADHESIVE COPOLYMERS

(51) International classification :C09J123/26,C09J123/22,C08F210/10
(31) Priority Document No :61/388283
(32) Priority Date :30/09/2010
(33) Name of priority country :U.S.A.
(86) International Application No :PCT/US2011/049042
Filing Date :25/08/2011
(87) International Publication No :WO 2012/044417
(61) Patent of Addition to Application Number :NA
Filing Date :NA
(62) Divisional to Application Number :NA
Filing Date :NA

(71)**Name of Applicant :**
1)3M INNOVATIVE PROPERTIES COMPANY
Address of Applicant :3M Center Post Office Box 33427 Saint Paul Minnesota 55133 3427 U.S.A.
(72)**Name of Inventor :**
1)LEE Hae Seung
2)JOLY Guy D.
3)CHATTERJEE Joon
4)ALOSHYNA EP LESUFFLEUR Marie
5)JENNEN Jay M.
6)MA Jingjing
7)CALDWELL Gregg A.
8)GADDAM Babu N.
9)KREPSKI Larry R.

(57) Abstract :
The disclose provides pressure sensitive adhesives and adhesive sealants prepared from modified crosslinked isobutylene copolymers and tape articles prepared therefrom.

No. of Pages : 38 No. of Claims : 23

(12) PATENT APPLICATION PUBLICATION
(21) Application No.2229/CHENP/2013 A
(19) INDIA
(22) Date of filing of Application :20/03/2013
(43) Publication Date : 05/09/2014

(54) Title of the invention : DISPOSIBLE BIO ANALYSIS CARTRIDGE AND INSTRUMENT FOR CONDUCTING BIO ANALYSIS USING SAME

(51) International classification :G01N27/447,G01N21/64
(31) Priority Document No :61/376551
(32) Priority Date :24/08/2010
(33) Name of priority country :U.S.A.
(86) International Application No :PCT/US2011/048162
Filing Date :18/08/2011
(87) International Publication No :WO 2012/027175
(61) Patent of Addition to Application Number :NA
Filing Date :NA
(62) Divisional to Application Number :NA
Filing Date :NA

(71)**Name of Applicant :**
1)BIOPTIC INC.
Address of Applicant :7f. No 3 Alley 6 Lane 235 Baociao Rd. Hsin tien Distric New Taipei City Taiwan
(72)**Name of Inventor :**
1)TSAI Shou kuan
2)AMIRKHANIAN Varouj D.

(57) Abstract :
A cartridge based bio separation system configured to utilize a
reliable compact simplified removable portable interchangeable reusable low cost recyclable and/or disposable pen shaped bio separation cartridge that is easy to assemble and use with no moving parts and that has an integrated reagent (separation buffer) reservoir. The bio separation cartridge includes at least one separation channel defined therein. The bio separation system includes an instrument that is provided with a detection configuration that includes optics for application of incident radiation at and detection of output radiation from a detection zone along the separation channel for the detection of radiation induced fluorescence emission without requiring fine alignment of optics to the capillary column. The instrument is configured to conduct bio separation in the separation channel of the bio separation cartridge in an automated manner. The reservoir is structured to be coupled to an air pressure pump that pressurizes the gel reservoir to purge and fill the capillaries with buffer as the separation support medium. The cartridge does not require detection optics to be integrated into the cartridge and the separation channel does not require fine alignment with respect to the detection zones. In one embodiment the cartridge does not include integrated detection optics.

No. of Pages : 46 No. of Claims : 22

(12) PATENT APPLICATION PUBLICATION
(21) Application No.2423/CHE/2013 A
(19) INDIA
(22) Date of filing of Application :03/06/2013
(43) Publication Date : 05/09/2014

(54) Title of the invention : APPARATUS FOR JOINING THREADS OR YARNS BY MEANS OF COMPRESSED AIR AND LIQUID AND A RELATIVE PILOTING METHOD

(51) International classification	:B65H
(31) Priority Document No	:M12012A 000961
(32) Priority Date	:04/06/2012
(33) Name of priority country	:Italy
(86) International Application No	:NA
Filing Date	:NA
(87) International Publication No	: NA
(61) Patent of Addition to Application Number	:NA
Filing Date	:NA
(62) Divisional to Application Number	:NA
Filing Date	:NA

(71)**Name of Applicant :**
1)MESDAN S.P.A
Address of Applicant :VIA MASSERINO 6, LOCALITA RAFFA, 25080 PUEGNAGO DEL GARDA(BS) Italy
(72)**Name of Inventor :**
1)RAGNOLI, FABRIZIO
2)BERTAZZI, ANDREA

(57) Abstract :
The present invention concerns an apparatus (10) for joining threads or yarns by means of compressed air and liquid, comprising a body (11) on which a joining head (12) is mounted in which a splicing chamber (13) is obtained, the splicing chamber being provided with two opposite side openings between which a longitudinal slot extends, open at the top for introducing into it two ends of a thread or yarn to be joined, a cover associated in a movable manner with the body (11) for temporarily closing the longitudinal slot of the splicing chamber, pneumatic preparation means for pneumatically preparing (20, 21) the ends of the thread or yarn to be joined placed at a distance from the opposite side openings of the splicing chamber (13), at least one feeding duct (14) for feeding compressed air added with a liquid into the splicing chamber (13) and which is obtained in the body (11), feeding means for feeding (24) compressed air into the pneumatic preparation means (20, 21) of the ends of the thread or yarn to be joined and, through the feeding duct (14), into the splicing chamber (13), means for adding liquid to the compressed air supplied into the feeding duct (14) before, added with the liquid, it is introduced into the splicing chamber (13), a plurality of cams for controlling the mobile members of the apparatus (10), cams which are obtained in a cam plate or drum (41) mounted in a movable manner in two opposite directions inside the body (11) and associated with respective motor means of the stepper and reversible type, injecting means for injecting a jet of cleaning compressed air into the pneumatic preparation means (20, 21) of the ends of threads or yarns to be joined and/or into the splicing chamber (13) for cleaning the same and means for actuating the injecting means which can be controlled by a respective cam or by at least one tract of one of the cams of the plate or drum (41) for injecting a jet of cleaning compressed air respectively into the pneumatic preparation means (20, 21) of the ends of threads or yarns to be joined and/or into the splicing chamber (13) for cleaning the same in a temporal step extraneous to a joining cycle or between two successive joining cycles and for a pre-determinable time.

No. of Pages : 50 No. of Claims : 12

(12) PATENT APPLICATION PUBLICATION
(19) INDIA
(22) Date of filing of Application :05/03/2013
(21) Application No.1794/CHENP/2013 A
(43) Publication Date : 05/09/2014

(54) Title of the invention : NON DETACHABLE RESERVOIR HOLDER FOR A DRUG DELIVERY DEVICE

(51) International classification :A61M5/24
(31) Priority Document No :61/388042
(32) Priority Date :30/09/2010
(33) Name of priority country :U.S.A.
(86) International Application No :PCT/EP2011/066930
Filing Date :28/09/2011
(87) International Publication No :WO 2012/041932
(61) Patent of Addition to Application Number :NA
Filing Date :NA
(62) Divisional to Application Number :NA
Filing Date :NA

(71)**Name of Applicant :**
1)SANOFI AVENTIS DEUTSCHLAND GMBH
Address of Applicant :Br¼ningstrasse 50 65929 Frankfurt Germany
(72)**Name of Inventor :**
1)TEUCHER Axel
2)JUGL Michael
3)OSMAN Thomas Frederick
4)SANDERS David
5)AVERY Richard James Vincent
6)BUTLER Joseph

(57) Abstract :
Disclosed herein are various examples of a drug delivery system (100 200 300 400 500 600) having a non detachable reservoir holder (104 204 304 404 504 602 706). The drug delivery system includes a dose setting mechanism (102 202 302 402 502 604) and a reservoir holder (104 204 304 404 504 602 706) attached to the dose setting mechanism (102 202 302 402 502 604) wherein the reservoir holder (104 204 304 404 504 602 706) is configured to partially detach from the dose setting mechanism (102 202 302 402 502 604) to allow for (i) insertion of a reservoir (120 206 312 416 516 702) into the reservoir holder (104 204 304 404 504 602 706) without being fully detached from the dose setting mechanism (102 202 302 402 502 604) and (ii) removal of the reservoir (120 206 312 416 516 702) from the reservoir holder (104 204 304 404 504 602 706) without being fully detached from the dose setting mechanism (102 202 302 402 502 604).

No. of Pages : 36 No. of Claims : 17

(12) PATENT APPLICATION PUBLICATION
(19) INDIA
(22) Date of filing of Application :26/03/2013
(21) Application No.2389/CHENP/2013 A
(43) Publication Date : 05/09/2014

(54) Title of the invention : AQUEOUS POLISHING COMPOSITION AND PROCESS FOR CHEMICALLY MECHANICALLY POLISHING SUBSTRATES FOR ELECTRICAL MECHANICAL AND OPTICAL DEVICES

(51) International classification :C09G1/02,C09G1/04,C09G1/18
(31) Priority Document No :61/380721
(32) Priority Date :08/09/2010
(33) Name of priority country :U.S.A.
(86) International Application No:PCT/IB2011/053884
Filing Date :06/09/2011
(87) International Publication No :WO 2012/032461
(61) Patent of Addition to Application Number :NA
Filing Date :NA
(62) Divisional to Application Number :NA
Filing Date :NA

(71)**Name of Applicant :**
1)BASF SE
Address of Applicant :67056 Ludwigshafen Germany
2)BASF (CHINA) COMPANY LIMITED
(72)**Name of Inventor :**
1)LI Yuzhuo
2)CHU Jea Ju
3)VENKATARAMAN Shyam Sundar
4)USMAN IBRAHIM Sheik Ansar
5)PINDER Harvey Wayne

(57) Abstract :
An aqueous polishing composition having a pH of 3 to 11 and comprising (A) abrasive particles which are positively charged when dispersed in an aqueous medium free from component (B) and of a pH of 3 to 9 as evidenced by the electrophoretic mobility; (B) anionic phosphate dispersing agents; and (C) a polyhydric alcohol component selected from the group consisting of (c1) water soluble and water dispersible aliphatic and cycloaliphatic monomeric dimeric and oligomeric polyols having at least 4 hydroxy groups; (c2) a mixture consisting of (c21) water soluble and water dispersible aliphatic and cycloaliphatic polyols having at least 2 hydroxy groups; and (c22) water soluble or water dispersible polymers selected from linear and branched alkylene oxide homopolymers and copolymers (c221); and linear and branched aliphatic and cycloaliphatic poly(N vinylamide) homopolymers and copolymers (c222); and (c3) mixtures of (c1) and (c2); and a process for polishing substrates for electrical mechanical and optical devices.

No. of Pages : 32 No. of Claims : 19

(12) PATENT APPLICATION PUBLICATION
(19) INDIA
(22) Date of filing of Application :28/03/2013
(21) Application No.2455/CHENP/2013 A
(43) Publication Date : 05/09/2014

(54) Title of the invention : BACK FACE PROTECTION SHEET FOR SOLAR CELL MODULE AND SOLAR CELL MODULE USING SAME

(51) International classification	:H01L31/042,B32B27/00,B32B27/36
(31) Priority Document No	:2010193144
(32) Priority Date	:31/08/2010
(33) Name of priority country	:Japan
(86) International Application No	:PCT/JP2011/069514
Filing Date	:30/08/2011
(87) International Publication No	:WO 2012/029733
(61) Patent of Addition to Application Number	:NA
Filing Date	:NA
(62) Divisional to Application Number	:NA
Filing Date	:NA

(71)**Name of Applicant :**
1)TORAY ADVANCED FILM CO. LTD.
Address of Applicant :3 16 Nihonbashi Hongoku cho 3 chome Chuo ku Tokyo 1030021 Japan
(72)**Name of Inventor :**
1)OKUYAMA Futoshi
2)KATOU Kouhei
3)ASHIDA Yuuka
4)MIKAWA Masahiro
5)TERANISHI Masayoshi

(57) Abstract :
Provided in the present invention is a back face protection sheet for a solar cell module that exhibits excellent adhesion strength and rupture strength even under a high temperature and high humidity environment by using a plastic film that has excellent characteristics such as electrical insulation characteristic heat resistance dimension stability mechanical strength weatherability and water resistance and using a two part type lamination adhesive having excellent weatherability. The back face protection sheet for a solar cell module is made to have excellent adhesion strength and rupture strength for a long period of time even under a high temperature and high humidity environment by improving weatherability (hydrolysis resistance) as base material films and giving weatherability (hydrolysis resistance) to the two part type lamination adhesive to be used in pasting together the base material films.

No. of Pages : 32 No. of Claims : 8

(12) PATENT APPLICATION PUBLICATION
(21) Application No.1964/CHENP/2013 A
(19) INDIA
(22) Date of filing of Application :12/03/2013
(43) Publication Date : 05/09/2014

(54) Title of the invention : DEVICE AND METHOD FOR SETTING UP A CONTROL ELEMENT FOR THE GAS PRESSURE OF A COKE OVEN CHAMBER WITHOUT EXPANSION INDUCED DEVIATIONS OF THE CONTROL ASSEMBLY

(51) International classification :C10B27/06,C10B41/08
(31) Priority Document No :10 2010 047 025.2
(32) Priority Date :30/09/2010
(33) Name of priority country :Germany
(86) International Application No :PCT/EP2011/004795
Filing Date :26/09/2011
(87) International Publication No :WO 2012/041469
(61) Patent of Addition to Application Number :NA
Filing Date :NA
(62) Divisional to Application Number :NA
Filing Date :NA

(71)**Name of Applicant :**
1)THYSSENKRUPP UHDE GMBH
Address of Applicant :Friedrich Uhde Str. 15 44141 Dortmund Germany
(72)**Name of Inventor :**
1)BERSCH,,R Kerstin
2)KREBBER Frank
3)SCHULTE Helmut

(57) Abstract :
The invention relates to a device for setting up a control element for controlling the gas pressure of a coke oven chamber without expansion induced deviations of the control assembly which deviations in comparable devices from the prior art result from high temperatures and temperature differences in coke oven chambers during operation. The device according to the invention and the method prevent water used for shutting off cooling and removing water soluble impurities from riser pipes from flowing out of the control element in an uncontrolled manner. The invention also relates to a method for controlling the gas pressure of a coke oven chamber using said device wherein the pressure in the coke oven chamber relative to the collecting main conducting raw gas is controlled by using said control element without expansion induced deviations of the regulating assembly.

No. of Pages : 18 No. of Claims : 10

(12) PATENT APPLICATION PUBLICATION
(21) Application No.2410/CHENP/2013 A
(19) INDIA
(22) Date of filing of Application :27/03/2013
(43) Publication Date : 05/09/2014

(54) Title of the invention : BONE MARROW HARVESTING DEVICE HAVING FLEXIBLE NEEDLE

(51) International classification :A61B10/02
(31) Priority Document No :61/389889
(32) Priority Date :05/10/2010
(33) Name of priority country :U.S.A.
(86) International Application No :PCT/US2011/054904
Filing Date :05/10/2011
(87) International Publication No :WO 2012/047984
(61) Patent of Addition to Application Number :NA
Filing Date :NA
(62) Divisional to Application Number :NA
Filing Date :NA

(71)**Name of Applicant :**
1)SYNTHES USA LLC
Address of Applicant :1302 Wrights Lane East West Chester PA 19380 U.S.A.
2)SYNTHES GMBH
(72)**Name of Inventor :**
1)WAWRZYNIAK Kortney
2)KURZYNA Peter
3)LEHMICKE Michael
4)KERR Sean
5)MARTHALER John Maurice
6)PARMELEE Steven Paul

(57) Abstract :
A bone marrow harvesting device includes a flexible bone marrow harvesting needle that can bend during operation to prevent the needle tip from piercing the inner cortical wall of the target bone. The needle defines an aspiration channel that defines an intake end that is recessed to reduce the instances that the aspiration channel will be fouled by bone particles or other debris within the cancellous portion.

No. of Pages : 41 No. of Claims : 26

(12) PATENT APPLICATION PUBLICATION
(19) INDIA
(22) Date of filing of Application :27/03/2013
(21) Application No.2412/CHENP/2013 A
(43) Publication Date : 05/09/2014

(54) Title of the invention : NANOPARTICLE BASED TUMOR TARGETED DRUG DELIVERY

(51) International classification :A61K9/127
(31) Priority Document No :61/402686
(32) Priority Date :02/09/2010
(33) Name of priority country :U.S.A.
(86) International Application No :PCT/US2011/050287
Filing Date :02/09/2011
(87) International Publication No :WO 2012/031175
(61) Patent of Addition to Application Number :NA
Filing Date :NA
(62) Divisional to Application Number :NA
Filing Date :NA

(71)**Name of Applicant :**
1)THE SCRIPPS RESEARCH INSTITUTE
Address of Applicant :10550 North Torrey Pines Road TCP 8 La Jolla California 92037 U.S.A.
(72)**Name of Inventor :**
1)REISFELD Ralph A.
2)XIANG Rong
3)LUO Yunping
4)LIAO Debbie
5)LIU Ze
6)CHEN Tingmei
7)CHEN Si
8)LU Dan

(57) Abstract :
The present invention provides an aqueous tumor targeting liposome nanoparticle composition comprising an aqueous dispersion of liposome nanoparticles. The nanoparticles preferably encapsulate an anti cancer chemotherapeutic agent which can be added to a pre formed liposome composition or can be incorporated in the liposomes during the formation of the liposomes. The liposome nanoparticles comprise a legumain targeting lipid admixed with one or more other micelle or vesicle forming lipid materials in the form of nanoparticulate liposomes dispersed in an aqueous carrier. A preferred tumor targeting liposome nanoparticle composition comprises (a) a legumain targeting lipid component (b) a zwitterionic lipid component; (c) an amino substituted lipid component; (d) a neutral lipid component; and (e) polyethylene glycol conjugated lipid component. The legumain targeting lipid component comprising a hydrophobic lipid portion covalenetly attached to a legumain binding moiety.

No. of Pages : 49 No. of Claims : 22

(12) PATENT APPLICATION PUBLICATION
(19) INDIA
(22) Date of filing of Application :01/01/2013
(21) Application No.27/CHENP/2013 A
(43) Publication Date : 05/09/2014

(54) Title of the invention : HIGH VOLTAGE SENSOR WITH AXIALLY OVERLAPPING ELECTRODES

(51) International classification :G01R15/24
(31) Priority Document No :PCT/EP2010/057872
(32) Priority Date :07/06/2010
(33) Name of priority country :EPO
(86) International Application No :PCT/EP2011/059399
Filing Date :07/06/2011
(87) International Publication No :WO 2011/154408
(61) Patent of Addition to Application Number :NA
Filing Date :NA
(62) Divisional to Application Number :NA
Filing Date :NA

(71)**Name of Applicant :**
1)ABB RESEARCH LTD
Address of Applicant :Affolternstrasse 44 CH 8050 Z¼rich Switzerland
(72)**Name of Inventor :**
1)WILDERMUTH Stephan
2)BOHNERT Klaus
3)KOCH Norbert
4)CZYZEWSKI Jan
5)MARCHESE Sergio Vincenzo

(57) Abstract :
A voltage sensor comprises an insulator (1) with mutually insulated electrodes (Eij E) embedded therein. The electrodes are coaxial and cylindrical and overlap axially along part of their lengths. They are mutually staggered and control the surfaces of electric equipotential such that there is a substantially homogeneous electric field outside the insulator (1) and a substantially homogeneous but higher field within a sensing cavity (7) within the insulator (1). A field sensor (6) is arranged within the sensing cavity (7) to measure the field. This design allows to produce compact voltage sensors for high voltage applications.

No. of Pages : 60 No. of Claims : 36

(12) PATENT APPLICATION PUBLICATION
(21) Application No.2260/CHENP/2013 A
(19) INDIA
(22) Date of filing of Application :21/03/2013
(43) Publication Date : 05/09/2014

(54) Title of the invention : AMMONIA PRODUCTION BY INTEGRATED INTENSIFIED PROCESSES

(51) International classification :C01B3/02,C01C1/04,C10J3/00
(31) Priority Document No :1014304.8
(32) Priority Date :27/08/2010
(33) Name of priority country :U.K.
(86) International Application No :PCT/GB2011/051620
Filing Date :30/08/2011
(87) International Publication No :WO 2012/025767
(61) Patent of Addition to Application Number :NA
Filing Date :NA
(62) Divisional to Application Number :NA
Filing Date :NA

(71)**Name of Applicant :**
1)UNIVERSITY OF NEWCASTLE UPON TYNE
Address of Applicant :6 Kensington Terrace Newcastle upon Tyne Tyne and Wear NE1 7RU U.K.
(72)**Name of Inventor :**
1)AKAY Galip

(57) Abstract :
An ammonia production process is disclosed. The process uses gasification of biomass waste and the like to produce syngas which using an integrated system including using nitrogen enriched air and a porous coated catalyst produces ammonia in a plasma reactor. The ammonia is finally recovered using sulphonated PolyHIPE Polymer which can be used as a fertilizer after neutralisation.

No. of Pages : 57 No. of Claims : 36

(12) PATENT APPLICATION PUBLICATION
(19) INDIA
(22) Date of filing of Application :21/03/2013
(21) Application No.2261/CHENP/2013 A
(43) Publication Date : 05/09/2014

(54) Title of the invention : AN ETHYLENE/ALPHA OLEFIN INTERPOLYMER SUITABLE FOR USE IN FIBER APPLICATIONS AND FIBERS MADE THEREFROM

(51) International classification :C08F210/16,D01F6/28
(31) Priority Document No :NA
(32) Priority Date :NA
(33) Name of priority country :NA
(86) International Application No :PCT/US2010/050751
Filing Date :29/09/2010
(87) International Publication No :WO 2012/044293
(61) Patent of Addition to Application Number :NA
Filing Date :NA
(62) Divisional to Application Number :NA
Filing Date :NA

(71)**Name of Applicant :**
1)DOW GLOBAL TECHNOLOGIES LLC
Address of Applicant :2040 Dow Center Midland Michigan 48674 U.S.A.
(72)**Name of Inventor :**
1)KARJALA Teresa P.
2)EFFLER Lawrence J.
3)DEMIRORS Mehmet
4)SERRAT Cristina
5)HAZLITT Lonnie G.

(57) Abstract :
The instant invention provides an ethylene/alpha olefin interpolymer suitable for use in fiber applications and fibers made therefrom. The ethylene/alpha olefin interpolymer according to the present invention has a CDBI of less than 60% and comprises at least two fractions in crossfractionation of the ethylene/alpha olefin interpolymer eluting from 85°C to 90°C and from 90°C to 95°C comprising a weight fraction ratio of > 0.68 and a molecular weight homogeneity index of greater than 0.65; wherein the weight fraction ratio is the ratio of the weight of polymer in each fraction divided by the weight of polymer eluting between 95°C and 100°C and the molecular weight homogeneity index is the ratio of the weight average molecular weight of the polymer in the fraction divided by the weight average molecular weight of the polymer eluting between 95°C and 100°C and wherein the ethylene/alpha olefin interpolymer has a density in the range of from 0.920 to 0.965 g/cm and a melt index (I) in the range of from 0.5 to 100 g/10 minutes and melt flow ratio (I/I) in the range of from 5.8 to 8.

No. of Pages : 52 No. of Claims : 10

(12) PATENT APPLICATION PUBLICATION
(21) Application No.2459/CHE/2013 A
(19) INDIA
(22) Date of filing of Application :05/06/2013
(43) Publication Date : 05/09/2014

(54) Title of the invention : MOBILE PHASE DELIVERY DEVICE AND LIQUID CHROMATOGRAPH

(51) International classification	:g01n	(71)**Name of Applicant :**
(31) Priority Document No	:2012-139874	**1)SHIMADZU CORPORATION** Address of Applicant :1, NISHINOKYO-KUWABARACHO, NAKAGYO-KU, KYOTO-SHI, KYOTO 6048511 Japan
(32) Priority Date	:21/06/2012	
(33) Name of priority country	:Japan	(72)**Name of Inventor :**
(86) International Application No	:NA	**1)OSAKA, YUSUKE**
Filing Date	:NA	
(87) International Publication No	: NA	
(61) Patent of Addition to Application Number	:NA	
Filing Date	:NA	
(62) Divisional to Application Number	:NA	
Filing Date	:NA	

(57) Abstract :
A mobile phase supply device comprises an aqueous path including a first delivery pump for delivering an aqueous mobile phase, an organic solvent path including a second delivery pump for delivering an organic solvent mobile phase, and a mixer for mixing mobile phases from the aqueous path and the organic solvent path, and supplying the mixture to an analysis path of a liquid chromatograph. A flow resistance between the second delivery pump and the mixer is greater than a flow resistance between the first delivery pump and the mixer. FIG.l

No. of Pages : 26 No. of Claims : 5

(12) PATENT APPLICATION PUBLICATION
(21) Application No.2736/CHE/2013 A
(19) INDIA
(22) Date of filing of Application :24/06/2013
(43) Publication Date : 05/09/2014

(54) Title of the invention : ADJUSTABLE PENCIL SHARPENER

(51) International classification :B43L
(31) Priority Document No :101212581
(32) Priority Date :29/06/2012
(33) Name of priority country :Taiwan
(86) International Application No :NA
Filing Date :NA
(87) International Publication No : NA
(61) Patent of Addition to Application Number :NA
Filing Date :NA
(62) Divisional to Application Number :NA
Filing Date :NA

(71)**Name of Applicant :**
1)SDI CORPORATION
Address of Applicant :NO. 260, SEC. 2, CHANG NAN ROAD, CHANG HUA Taiwan
(72)**Name of Inventor :**
1)CHEN, SZU-YU

(57) Abstract :
A pencil sharpener has a waste case (10), a blade base (20), a blocking chunk (30), a blade (40), a rotating knob (50) and an adjusting shaft (60). The waste case (10) has a mounting hole (111) and multiple positioning segments (112). The blocking chunk (30) is moveably mounted on the bottom of the blade base (20) along an axial direction. The blade (40) is mounted securely on the blade base (20). The rotating knob (50) is mounted rotatably in the mounting hole (111) and has at least one engaging segment (532) selectively engaging the positioning segments (112). The adjusting shaft (60) is connected securely with the rotating knob (50) and is disposed on the blocking chunk (30). When the rotating knob (50) is rotated, the adjusting shaft (60) is rotated to push the blocking chunk (30) to move along the axial direction of the blade base (20).

No. of Pages : 27 No. of Claims : 17

(12) PATENT APPLICATION PUBLICATION
(21) Application No.2737/CHE/2013 A
(19) INDIA
(22) Date of filing of Application :24/06/2013
(43) Publication Date : 05/09/2014

(54) Title of the invention : TANDEM TYPE VANE COMPRESSOR

(51) International classification	:F02C	(71)**Name of Applicant :**
(31) Priority Document No	:2012-143190	**1)KABUSHIKI KAISHA TOYOTA JIDOSHOKKI** Address of Applicant :2-1, TOYODA-CHO, KARIYA-SHI, AICHI-KEN Japan
(32) Priority Date	:26/06/2012	
(33) Name of priority country	:Japan	(72)**Name of Inventor :**
(86) International Application No	:NA	**1)KOBAYASHI, KAZUO**
Filing Date	:NA	**2)KAYUKAWA, HIROAKI**
(87) International Publication No	: NA	**3)SATO, SHINICHI**
(61) Patent of Addition to Application Number	:NA	
Filing Date	:NA	
(62) Divisional to Application Number	:NA	
Filing Date	:NA	

(57) Abstract :
A tandem type vane compressor includes cylinder chambers. The cylinder chambers include first and second cylinder chambers adjacent to each other. The rotors include a first rotor accommodated in the first cylinder chamber and a second rotor accommodated in the second cylinder chamber. Each rotor has a back pressure supply channel, which connect baGk pressure chambers and a discharge pressure zone with each other. Each back pressure supply channel includes an intermediate channel located between a rotary shaft and a partition wall. The compressor includes a back pressure increase restriction portion that restricts a back pressure in the back pressure chambers of the second rotor from being increased to be greater than a predetermined pressure due to fluid flowing between the rotary shaft and the partition wall from the intermediate channel of the back pressure supply channel provided for the first rotor.

No. of Pages : 38 No. of Claims : 5

(12) PATENT APPLICATION PUBLICATION
(21) Application No.1719/CHE/2013 A
(19) INDIA
(22) Date of filing of Application :18/04/2013
(43) Publication Date : 05/09/2014

(54) Title of the invention : METHOD AND DEVICE FOR TESTING THE FUNCTION CAPACTITY OF AN NO OXIDATION CATALYST

(51) International classification	:B01J	(71)**Name of Applicant :**
(31) Priority Document No	:10 2012 007 897.8	**1)MAN TRUCK & BUS AG** Address of Applicant :DACHAUER STR. 667, 80995 MUNCHEN Germany
(32) Priority Date	:23/04/2012	
(33) Name of priority country	:Germany	(72)**Name of Inventor :**
(86) International Application No	:NA	**1)DORING, ANDREAS**
Filing Date	:NA	
(87) International Publication No	: NA	
(61) Patent of Addition to Application Number	:NA	
Filing Date	:NA	
(62) Divisional to Application Number	:NA	
Filing Date	:NA	

(57) Abstract :
Method and device for testing the function capacity of an NO oxidation catalyst The invention concerns a method and a device for testing the function capacity of an NO oxidation catalyst (5) which is used to reduce nitrous oxides (NOX) contained in the exhaust gas flow of an internal combustion engine (1) operated with air surplus. In the exhaust gas flow which is supplied to the NO oxidation catalyst (5), a change is made in the concentration of a reducing agent and the resulting change in NOX concentration in the exhaust gas flow within the NO oxidation catalyst (5) and/or downstream after the NO oxidation catalyst (5) is determined and used to test its function capacity.

No. of Pages : 25 No. of Claims : 19

(12) PATENT APPLICATION PUBLICATION
(19) INDIA
(22) Date of filing of Application :12/03/2013
(21) Application No.1957/CHENP/2013 A
(43) Publication Date : 05/09/2014

(54) Title of the invention : NON KINKING SELF WRAPPING WOVEN SLEEVE AND METHOD OF CONSTRUCTION THEREOF

(51) International classification :D03D3/00,D03D13/00,D03D15/00
(31) Priority Document No :61/374010
(32) Priority Date :16/08/2010
(33) Name of priority country :U.S.A.
(86) International Application No :PCT/US2011/047877
Filing Date :16/08/2011
(87) International Publication No :WO 2012/024272
(61) Patent of Addition to Application Number :NA
Filing Date :NA
(62) Divisional to Application Number :NA
Filing Date :NA

(71)**Name of Applicant :**
1)FEDERAL MOGUL POWERTRAIN INC.
Address of Applicant :26555 Northwestern Highway Southfield MI 48033 U.S.A.
(72)**Name of Inventor :**
1)MALLOY Cassie

(57) Abstract :
A wrappable textile sleeve and method of construction thereof is provided. The textile sleeve includes an elongate wall extending along a longitudinal axis between opposite ends with lengthwise extending edges extending along the longitudinal axis between the opposite ends. The wall is woven from lengthwise extending warp yarns and circumferentially extending weft yarns with at least some of the weft yarns being heat set to impart a self curling bias on the wall to bring the edges into overlapping relation with one another. Further the weft yarns form a plurality of discrete annular bands that extend circumferentially about the longitudinal axis with adjacent bands having different picks per inch from one another to provide the sleeve with enhance regions of flexibility self curling bias and hoop strength.

No. of Pages : 14 No. of Claims : 20

(12) PATENT APPLICATION PUBLICATION
(19) INDIA
(22) Date of filing of Application :24/06/2013
(21) Application No.2743/CHE/2013 A
(43) Publication Date : 05/09/2014

(54) Title of the invention : MAGNETIC CLASP

(51) International classification :A44C
(31) Priority Document No :12173916.3
(32) Priority Date :27/06/2012
(33) Name of priority country :EPO
(86) International Application No :NA
Filing Date :NA
(87) International Publication No : NA
(61) Patent of Addition to Application Number :NA
Filing Date :NA
(62) Divisional to Application Number :NA
Filing Date :NA

(71)**Name of Applicant :**
1)THE SWATCH GROUP RESEARCH AND DEVELOPMENT LTD.
Address of Applicant :RUE DES SORS 3, 2074 MARIN Switzerland
(72)**Name of Inventor :**
1)NICOLAS, CEDRIC
2)RAGOT, PATRICK

(57) Abstract :
The bracelet includes two flexible end parts (8, 9) which are separable and arranged to overlap each other in the closed position of the bracelet, the bracelet includes a first magnetic circuit portion (11a, 11b) integrated in one of the end parts and a second magnetic circuit portion (12a, 12b, 12c, 12d, 12e, 12f) integrated in the other end part, the magnetic circuit portions being arranged to mutually attract each other so as to unite the two end parts in the closed position of the bracelet. One of the end parts (9) includes a plurality of second magnetic circuit portions (12a, 12b, 12c, 12d, 12e, 12f) which are arranged parallel to each other and spaced apart from each other to enable the length of the bracelet to be selected. The magnetic circuit portions each include a soft ferromagnetic alloy yoke (14a, 14b, 16a, 16b, 16c, 16d, 16e, 16f) arranged transversely to the bracelet and parallel to the surface of the end part in which the magnetic circuit portion is integrated. The first magnetic circuit portion (11a, 11b) includes a row of bipolar magnets (18A) arranged between the yoke and the contact surface of the end part.

No. of Pages : 20 No. of Claims : 10

(12) PATENT APPLICATION PUBLICATION
(21) Application No.2744/CHE/2013 A
(19) INDIA
(22) Date of filing of Application :24/06/2013
(43) Publication Date : 05/09/2014

(54) Title of the invention : DEVICE FOR LOCKING AT LEAST ONE MODULAR ELECTRIC APPARATUS ON A MOUNTING RAIL, AND ELECTRIC SWITCHGEAR APPARATUS FIXED ONTO THE RAIL BY MEANS OF ONE SUCH DEVICE

(51) International classification :H01B13/00
(31) Priority Document No :12 56148
(32) Priority Date :28/06/2012
(33) Name of priority country :France
(86) International Application No :NA
Filing Date :NA
(87) International Publication No : NA
(61) Patent of Addition to Application Number :NA
Filing Date :NA
(62) Divisional to Application Number :NA
Filing Date :NA

(71)**Name of Applicant :**
1)SCHNEIDER ELECTRIC INDUSTRIES SAS
Address of Applicant :35, RUE JOSEPH MONIER, F-92500 RUEIL MALMAISON France
(72)**Name of Inventor :**
1)HANNEQUIN, PASCAL
2)DUCHEMIN, JEAN-PIERRE

(57) Abstract :
The present invention relates to a device for locking at least one modular apparatus D on a mounting rail comprising, for at least one of the apparatuses, a latch (32,33) comprising a movable part able to slide with respect to the enclosure of the apparatus, said part comprising a first end part designed to collaborate with one edge called first edge of the longitudinal edges of the rail and a second end part called operating part able to be manoeuvred by a user so as to move said latch between a first position in which said latch performs fixing of the apparatus on the rail in cooperation with a fixed stop belonging to the enclosure collaborating with the longitudinal edge of the rail opposite the previous edge, and a second position in which said second end of the latch no longer collaborates with the edge of the rail so as to enable the apparatus to be extracted from said rail. This device is characterized in that it comprises an extension device P of the operating part (19) of the above-mentioned latch or latches (32,33), said extension device comprising a first end part (12) designed to be fixed onto the operating part (19) of the latch or latches (32,33), and a second end part (13) comprising means for manoeuvring (20) able to be actuated by the user in order to actuate the latch or latches.

No. of Pages : 37 No. of Claims : 11

(12) PATENT APPLICATION PUBLICATION
(19) INDIA
(22) Date of filing of Application :07/03/2013
(21) Application No.1867/CHENP/2013 A
(43) Publication Date : 05/09/2014

(54) Title of the invention : SILICON DIOXIDE DISPERSIONS

(51) International classification :C09C1/30
(31) Priority Document No :10009447.3
(32) Priority Date :10/09/2010
(33) Name of priority country :EPO
(86) International Application No :PCT/EP2011/065503
Filing Date :07/09/2011
(87) International Publication No :WO 2012/032099
(61) Patent of Addition to Application Number :NA
Filing Date :NA
(62) Divisional to Application Number :NA
Filing Date :NA

(71)**Name of Applicant :**
1)BASF SE
Address of Applicant :67056 Ludwigshafen Germany
(72)**Name of Inventor :**
1)ELING Berend
2)BOUDOU Marine
3)AUFFARTH Stefan
4)REESE Oliver

(57) Abstract :
The invention relates to stable silicon dioxide dispersions and to the use thereof for production of polyurethanes. The silicon dioxide dispersions are substantially or preferably completely free of water and contain silicon dioxide particles with a mean particle diameter of 1 150 nm and at least one chain extender. The silicon dioxide particles may be modified with a silane (S) which contains groups reactive toward isocyanates. In addition a polyol especially a polyesterol and/or an isocyanate containing compound may be present in the silicon dioxide dispersions.

No. of Pages : 35 No. of Claims : 19

(12) PATENT APPLICATION PUBLICATION
(21) Application No.2152/CHENP/2013 A
(19) INDIA
(22) Date of filing of Application :18/03/2013
(43) Publication Date : 05/09/2014

(54) Title of the invention : MEMORY CONTROLLERS SYSTEMS AND METHODS FOR APPLYING PAGE MANAGEMENT POLICIES BASED ON STREAM TRANSACTION INFORMATION

(51) International classification :G06F13/16
(31) Priority Document No :12/900857
(32) Priority Date :08/10/2010
(33) Name of priority country :U.S.A.
(86) International Application No :PCT/US2011/055637
Filing Date :10/10/2011
(87) International Publication No :WO 2012/048327
(61) Patent of Addition to Application Number :NA
Filing Date :NA
(62) Divisional to Application Number :NA
Filing Date :NA

(71)**Name of Applicant :**
1)QUALCOMM INCORPORATED
Address of Applicant :Attn: International Ip Administration 5775 Morehouse Drive San Diego California 92121 U.S.A.
(72)**Name of Inventor :**
1)SHIRLEN Martyn Ryan
2)HOFMANN Richard Gerard
3)SCHAFFER Mark Michael

(57) Abstract :
Memory controllers systems methods and computer readable mediums for applying a page management policy(ies) based on stream transaction information are disclosed. In one embodiment a memory controller is provided and configured to receive memory access requests for stream transactions. The memory controller is configured to perform a memory access to a memory page(s) in memory included in the stream transaction. The controller is further configured to apply a page management policy(ies) to the memory page(s) in memory based on information related to the stream transactions. In this manner the page management policy(ies) can be configured to utilize page open policies for efficiency that stream transactions may facilitate but while also recognizing and taking into consideration in the page management policy latency issues that can arise when the memory controller is handling memory access requests from different devices.

No. of Pages : 39 No. of Claims : 31

(12) PATENT APPLICATION PUBLICATION
(21) Application No.2766/CHE/2013 A
(19) INDIA
(22) Date of filing of Application :25/06/2013
(43) Publication Date : 05/09/2014

(54) Title of the invention : HIGH-TENSION STEEL PLATE EXCELLENT IN BASE METAL TOUGHNESS AND HAZ TOUGHNESS

(51) International classification	:C22C38/00	(71)**Name of Applicant :**
(31) Priority Document No	:2012-147891	**1)KABUSHIKI KAISHA KOBE SEIKO SHO (KOBE STEEL, LTD.)**
(32) Priority Date	:29/06/2012	Address of Applicant :2-4, WAKINOHAMA-KAIGANDORI 2-CHOME, CHUO-KU, KOBE-SHI, HYOGO 651-8585 Japan
(33) Name of priority country	:Japan	(72)**Name of Inventor :**
(86) International Application No	:NA	**1)KOU, HIROAKI**
Filing Date	:NA	
(87) International Publication No	: NA	
(61) Patent of Addition to Application Number	:NA	
Filing Date	:NA	
(62) Divisional to Application Number	:NA	
Filing Date	:NA	

(57) Abstract :
The steel plate of the invention is a high-tension steel plate that has a tensile strength of 1100 MPa or more and is excellent in base metal toughness and HAZ toughness and preferably in abrasion resistance. The steel plate satisfies a predetermined requirement of components in the steel. The Ceq (IIW) represented by the following equation ranges from 0.40 to 0.45 both inclusive: Ceq (IIW) = [C] + {1/6 x [Mn]} + {1/5 x ([Cr] + [Mo] + [V])} + {l/15 + ([Cu] + [Ni])} in which each parenthesis-symbol Q means the content by percentage of an element in the parentheses. Oxide grains having a maximum diameter of 2 um or less are present in a number density of 200 /mm2 or more in the steel. The steel is composed of 29% or more by volume of martensite microstructure, and bainite micro structure as the balance.

No. of Pages : 21 No. of Claims : 2

(12) PATENT APPLICATION PUBLICATION
(21) Application No.2767/CHE/2013 A
(19) INDIA
(22) Date of filing of Application :25/06/2013
(43) Publication Date : 05/09/2014

(54) Title of the invention : APPARATUS FOR THE PNEUMATIC JOINING OF THREADS AND YARNS TO BE INSTALLED ON TEXTILE MACHINES, IN PARTICULAR AUTOMATIC WINDING MACHINES

(51) International classification	:B65H
(31) Priority Document No	:MI2012A 001143
(32) Priority Date	:28/06/2012
(33) Name of priority country	:Italy
(86) International Application No	:NA
Filing Date	:NA
(87) International Publication No	: NA
(61) Patent of Addition to Application Number	:NA
Filing Date	:NA
(62) Divisional to Application Number	:NA
Filing Date	:NA

(71)**Name of Applicant :**
1)MESDAN S.P.A.
Address of Applicant :VIA MASSERINO 6, LOCALITA RAFFA, 25080 PUEGNAGO DEL GARDA (BS) Italy
(72)**Name of Inventor :**
1)CAPPA, CLAUDIO
2)BERTAZZI, ANDREA

(57) Abstract :
An apparatus (10) for the pneumatic joining of threads and yarns to be installed on textile machines, in particular on automatic winding machines, comprising a body (11) on which a joining head (12) is mounted wherein a splicing chamber (13) is obtained which is provided with two opposite side openings between which extends a longitudinal, open-top slit for introducing therein two heads of a thread or yarn to be joined, preparatory means (15) for the pneumatic preparation of the ends of the heads of the thread or yarn to be joined, which are positioned at a distance from the opposite side openings of the splicing chamber (13), at least a first supply duct (17) of compressed air to the preparatory means (15) and which is obtained in the body (11) , at least a second supply duct (18) of compressed air to the splicing chamber (13) and which is obtained in the body (11) , a plurality of control cams of the movable members of the apparatus (10) which are obtained in a cam plate or drum (21) movably mounted in two opposite directions inside the body (11) and associable with respective motor means (M) of the stepper and reversible type, and a distributor valve (16) of compressed air to the first supply duct (17) and to the second supply duct (18) of the air respectively to the preparatory means (15) and to the splicing chamber (13), the distributor valve (16) comprising a valve body (19) associated with the body (11) and provided with an internal cavity in which is movably housed a spool (20) with straight motion in both directions, said spool being activated by a lever (22) that is controlled by a respective control cam (T2) of the cam plate or drum (21) between a rest position of the distributor valve (16), a first open position of the distributor valve (16) for feeding the compressed air into the first supply duct (17) to the preparatory means (15) and a second open position of the distributor valve (16) for feeding compressed air into the second supply duct (18) to the splicing chamber, wherein the valve body (19) comprises at least a first inlet port (23) of compressed air in fluid communication with the internal cavity of the valve body (19) and with a first feeding duct (24) of compressed air associable with a first source (25) of compressed air at a pressure Pi, a second inlet port (26) of compressed air in fluid communication with the internal cavity of the valve body (19) and with a second feeding duct (27) of compressed air associable with a second source of compressed air (28) at a pressure P2 equal to or different from PI, a first outlet port (29) of compressed air in fluid communication with the internal cavity of the valve body (19) and with the first supply duct (17) and that, when the distributor valve (16) is in the first open position, is placed in communication through the spool (20) with the first inlet port (23) and a second outlet port (30) of compressed air in fluid communication with the internal cavity of the valve body (19) and with the second supply duct (18) and which, when the distributor valve (16) is in the second open position, is placed in communication through the spool (20) with the second inlet port (26).

No. of Pages : 30 No. of Claims : 7

(12) PATENT APPLICATION PUBLICATION
(19) INDIA
(22) Date of filing of Application :20/01/2012
(21) Application No.245/CHE/2012 A
(43) Publication Date : 05/09/2014

(54) Title of the invention : POLYMORPH OF 1-[(2,6-DIFLUOROPHENYL)METHYL]-1H-1,2,3-TRIAZOLE-4-CARBOXAMIDE

(51) International classification :C07D
(31) Priority Document No :NA
(32) Priority Date :NA
(33) Name of priority country :NA
(86) International Application No :NA
Filing Date :NA
(87) International Publication No : NA
(61) Patent of Addition to Application Number :NA
Filing Date :NA
(62) Divisional to Application Number :NA
Filing Date :NA

(71)**Name of Applicant :**
1)MSN LABORATORIES LIMITED
Address of Applicant :FACTORY: SY.NO:317 & 323, RUDRARAM(VIL), PATANCHERU(MDL), MEDAK(DIST) - 502 329 Andhra Pradesh India
(72)**Name of Inventor :**
1)SRINIVASAN THIRUMALAI RAJAN
2)SAJJA ESWARAIAH
3)REVU SATYANARAYANA

(57) Abstract :
The present invention provides a novel polymorphic form of l-[(2,6-difluorophenyl)methyl]-lH-l,2,3-triazole-4-carboxamide compound represented by the following structural formula-1 and process for its preparation.

No. of Pages : 28 No. of Claims : 10

(12) PATENT APPLICATION PUBLICATION
(21) Application No.2589/CHE/2013 A
(19) INDIA
(22) Date of filing of Application :14/06/2013
(43) Publication Date : 05/09/2014

(54) Title of the invention : TANDEM VANE COMPRESSOR

(51) International classification	:F04c	(71)**Name of Applicant :**
(31) Priority Document No	:2012-138128	**1)KABUSHIKI KAISHA TOYOTA JIDOSHOKKI** Address of Applicant :2-1, TOYODA-CHO, KARIYA-SHI, AICHI-KEN Japan
(32) Priority Date	:19/06/2012	
(33) Name of priority country	:Japan	(72)**Name of Inventor :**
(86) International Application No	:NA	**1)KAZUO KOBAYASHI**
Filing Date	:NA	**2)HIROAKI KAYAKAWA**
(87) International Publication No	: NA	**3)SHINICHI SATO**
(61) Patent of Addition to Application Number	:NA	
Filing Date	:NA	
(62) Divisional to Application Number	:NA	
Filing Date	:NA	

(57) Abstract :
A tandem vane compressor includes a shell, a suction chamber, a discharge chamber, a first and a second compression chambers and a first and a second compression units. The first and the second compression units connected in a tandem manner include a first and a second cylinder chambers, a first and a second rotors having first and second slots and first and second vanes, respectively. The tandem vane compressor further includes a first side plate, a second side plate separating the first and the second compression chambers, a third side plate, a first cylinder block held between the first and the second side plates, a second cylinder block held between the second and the third side plates and a throttle. The throttle is formed in the second side plate or the second cylinder block for restricting flow rate of refrigerant gas in the suction phase of the second compression unit.

No. of Pages : 36 No. of Claims : 6

(12) PATENT APPLICATION PUBLICATION
(21) Application No.259/CHE/2012 A
(19) INDIA
(22) Date of filing of Application :23/01/2012
(43) Publication Date : 05/09/2014

(54) Title of the invention : COST-EFFECTIVE EVOH CO-EXTRUDED PE FILMS COMBINATION MULTI-LAYER FLEXIBLE FILMS/PACKAGES ADAPTED FOR ENHANCED IMPACT RESISTANCE AND EXTENDED QUALITY PACKAGING OF ULTRA HIGH TEMPERATURE (UHT) TREATED MILK

(51) International classification :B32B
(31) Priority Document No :NA
(32) Priority Date :NA
(33) Name of priority country :NA
(86) International Application No :NA
Filing Date :NA
(87) International Publication No : NA
(61) Patent of Addition to Application Number :NA
Filing Date :NA
(62) Divisional to Application Number :NA
Filing Date :NA

(71)**Name of Applicant :**
1)CAVINKARE PVT. LTD.
Address of Applicant :CAVIN VILLE, NO. 12, CENOTAPH ROAD, CHENNAI - 600 018 Tamil Nadu India
(72)**Name of Inventor :**
1)MOHAN, T.D.
2)MAKHAL, S.

(57) Abstract :
A cost-effective flexible packaging for UHT treated milk/flowable products involving EVOH comprising selectively co-extruded multi-layer EVOH (Ethylene Vinyl Alcohol) and PE (Polyethylene) flexible film based package combination adapted for high radiation barrier through the use of opacifiers in select films and for high impact resistance and desired shelf life of aseptically filled UHT treated milk/ flowable products to keep it acceptable for a minimum period of about 70 days at ambient temperature in terms of retaining the desired quality characteristics like taste, flavour, colour and appearance fit for consumption.

No. of Pages : 32 No. of Claims : 16

(12) PATENT APPLICATION PUBLICATION
(19) INDIA
(22) Date of filing of Application :14/06/2013
(21) Application No.2590/CHE/2013 A
(43) Publication Date : 05/09/2014

(54) Title of the invention : VANE COMPRESSOR

(51) International classification :F01C21/08,F04C28/24,F04C28/06
(31) Priority Document No :2012-138152
(32) Priority Date :19/06/2012
(33) Name of priority country :Japan
(86) International Application No :NA
Filing Date :NA
(87) International Publication No : NA
(61) Patent of Addition to Application Number :NA
Filing Date :NA
(62) Divisional to Application Number :NA
Filing Date :NA

(71)**Name of Applicant :**
1)KABUSHIKI KAISHA TOYOTA JIDOSHOKKI
Address of Applicant :2-1, TOYODA-CHO, KARIYA-SHI, AICHI-KEN Japan
(72)**Name of Inventor :**
1)INAGAKI, MASAHIRO
2)SATO, SHINICHI
3)KOUMURA, SATOSHI
4)KOBAYASHI, KAZUO

(57) Abstract :
A vane compressor includes a first and a second housings, a shell, a compression chamber, a drive shaft and a compression unit. The compression unit includes a cylinder chamber and a rotor rotated by the drive shaft, rotatably supported in the cylinder chamber. The rotor has a plurality of slots and a plurality of vanes slidably received in the respective slots and forming the compression chamber with inner surface of the cylinder chamber and outer surface of the rotor. The first housing forms one end surface of the cylinder chamber. The second housing forms the other end surface of the cylinder chamber. The shell and the second housing cooperate to form the discharge chamber. The first housing or the second housing includes a cylinder forming portion forming inner surface of the cylinder chamber. The shell has a mounting lug and accommodates the cylinder forming portion.

No. of Pages : 23 No. of Claims : 7

(12) PATENT APPLICATION PUBLICATION
(21) Application No.2791/CHE/2013 A
(19) INDIA
(22) Date of filing of Application :26/06/2013
(43) Publication Date : 05/09/2014

(54) Title of the invention : MOTOR-DRIVEN COMPRESSOR

(51) International classification	:F25B41/00	(71)**Name of Applicant :**
(31) Priority Document No	:2012-145746	**1)KABUSHIKI KAISHA TOYOTA JIDOSHOKKI** Address of Applicant :2-1, TOYODA-CHO, KARIYA-SHI, AICHI-KEN Japan
(32) Priority Date	:28/06/2012	
(33) Name of priority country	:Japan	(72)**Name of Inventor :**
(86) International Application No	:NA	**1)FUKASAKU, HIROSHI**
Filing Date	:NA	**2)MERA, MINORU**
(87) International Publication No	: NA	**3)SUITOU, KEN**
(61) Patent of Addition to Application Number	:NA	**4)HISHINUMA, YUMIN**
Filing Date	:NA	**5)MOROI, TAKAHIRO**
(62) Divisional to Application Number	:NA	
Filing Date	:NA	

(57) Abstract :
A motor-driven compressor includes a compression unit having a compression chamber, a rotation shaft, an electric motor having a coil, a motor driving circuit, a housing, and a shaft support. The coil includes a first coil end, which is relatively close to the motor driving circuit, and a second coil end, which is relatively close to the compression unit. The housing includes a first area and a second area. A refrigerant passage communicates the first area with the second area. The shaft support includes a guide wall that guides the refrigerant to flow along the radial outer surface of the second coil end. The refrigerant guided by the guide wall is drawn into the compression chamber from the second area through a first suction passage. The first suction passage and the refrigerant passage are arranged at opposite sides of the rotation shaft.

No. of Pages : 26 No. of Claims : 6

(12) PATENT APPLICATION PUBLICATION
(19) INDIA
(22) Date of filing of Application :11/03/2013
(21) Application No.1944/CHENP/2013 A
(43) Publication Date : 05/09/2014

(54) Title of the invention : NON AQUEOUS OILY INJECTABLE FORMULATION EXHIBITING PRESERVATIVE EFFICACY

(51) International classification :A61K9/113,A61K9/107,A61K31/728
(31) Priority Document No :1020100091036
(32) Priority Date :16/09/2010
(33) Name of priority country :Republic of Korea
(86) International Application No :PCT/KR2011/006707
Filing Date :09/09/2011
(87) International Publication No :WO 2012/036430
(61) Patent of Addition to Application Number :NA
Filing Date :NA
(62) Divisional to Application Number :NA
Filing Date :NA

(71)**Name of Applicant :**
1)LG LIFE SCIENCES LTD.
Address of Applicant :92 Sinmunno 2 ga Jongno gu Seoul 110 062 Republic of Korea
(72)**Name of Inventor :**
1)SO Jin Eon
2)YEO Dong Jun
3)JANG Yoon Seon

(57) Abstract :
Disclosed herein is preferably a multi dose type non aqueous oily injectable formulation including; an active ingredient (drug) expressing therapeutic effects which is dissolved dispersed or suspended in a therapeutically effective amount in oil. The disclosed non aqueous oily injectable formulation may include; an oil affinitive preservative and a hydrophilic excipient non phase separable from the oil affinitive preservative when the excipient is mixed with the oil affinitive preservative.

No. of Pages : 22 No. of Claims : 17

(12) PATENT APPLICATION PUBLICATION
(21) Application No.2326/CHENP/2013 A
(19) INDIA
(22) Date of filing of Application :25/03/2013
(43) Publication Date : 05/09/2014

(54) Title of the invention : A CONCRETE MIXING AND TRANSPORT TRUCK WITH ROTARY SEALED FEEDING/DISCHARGING OPENING OF STIRRING CYLINDER

(51) International classification :B60P3/16,B28C5/24,B28C7/16
(31) Priority Document No :201010532751.X
(32) Priority Date :30/10/2010
(33) Name of priority country :China
(86) International Application No :PCT/CN2011/001752
Filing Date :21/10/2011
(87) International Publication No :WO 2012/055161
(61) Patent of Addition to Application Number :NA
Filing Date :NA
(62) Divisional to Application Number :NA
Filing Date :NA

(71)**Name of Applicant :**
1)YANTAI SHENGLIDA ENGINEERING TECHNOLOGY CO. LTD.
Address of Applicant :No.17 Weisi Road Hi Tech Development Zone Yantai Shandong 264670 China
(72)**Name of Inventor :**
1)SHENG Fuchun

(57) Abstract :
A concrete mixing and transport truck is provided which comprises a stirring cylinder with a rotary sealed feeding/discharging opening. A annularity sealed cavity is formed between the outer wall of a rotary inner cylinder (15) the inner wall of a fixed outer cylinder (6 2) the back end face of a rotary flange support base (6 1) and the front end face of a sealing end cover (7). At least one sealing belt (13) is set in the annularity rotary sealed cavity. The back end face of the last end sealing belt (13) is contacted tightly with the front end face of the sealing end cover (7). The stirring cylinder and the feeding/discharging opening are connected rotationally by reliable rotary sealing so as to make the stirring cylinder keep rotating when feeding and reduce the centre of gravity of the carrier vehicle. The truck improves driving safety eliminates concrete demixing problem and improves the quality of concrete and architecture quality.

No. of Pages : 19 No. of Claims : 10

(12) PATENT APPLICATION PUBLICATION
(19) INDIA
(22) Date of filing of Application :24/06/2013
(21) Application No.2745/CHE/2013 A
(43) Publication Date : 05/09/2014

(54) Title of the invention : FUEL INJECTION CONTROLLER

(51) International classification	:F02m
(31) Priority Document No	:2012-143045
(32) Priority Date	:26/06/2012
(33) Name of priority country	:Japan
(86) International Application No	:NA
Filing Date	:NA
(87) International Publication No	: NA
(61) Patent of Addition to Application Number	:NA
Filing Date	:NA
(62) Divisional to Application Number	:NA
Filing Date	:NA

(71)**Name of Applicant :**
1)DENSO CORPORATION
Address of Applicant :1-1, SHOWA-CHO, KARIYA-CITY, AICHI-PREF. 448-8661 Japan
(72)**Name of Inventor :**
1)KATSURA, RYOU

(57) Abstract :
A fuel injection controller samples and AD-converts a driving current of a feed pump at a specified time interval, and then filtrates an AD-converted value by a band-pass filter (S400, S402). A rising start angle TG is determined at a time point that the driving current after being filtrated becomes a specified range where a rise of the driving current is started (S404). A rising complete angle TR is determined at a time point that the driving current becomes a specified range where a rise of the driving current is completed (S406). The fuel injection controller computes an estimated pumping quantity of the high-pressure pump based on the rising start angle TG and the rising complete angle TR (S408). When a rail pressure sensor is normal (S410: Yes), the fuel injection controller controls an adjusting valve based on a common rail pressure (S412). When the rail pressure sensor is abnormal (S410: No), the fuel injection controller controls the adjusting valve based on the estimated pumping quantity.

No. of Pages : 22 No. of Claims : 6

(12) PATENT APPLICATION PUBLICATION
(21) Application No.2883/CHE/2013 A
(19) INDIA
(22) Date of filing of Application :28/06/2013
(43) Publication Date : 05/09/2014

(54) Title of the invention : ROBOT SYSTEM

(51) International classification	:B25J	(71)**Name of Applicant :**
(31) Priority Document No	:2012-161017	**1)KABUSHIKI KAISHA YASKAWA DENKI**
(32) Priority Date	:19/07/2012	Address of Applicant :2-1, KUROSAKI-SHIROISHI, YAHATANISHI-KU, KITAKYUSHU-SHI, FUKUOKA 806-0004 Japan
(33) Name of priority country	:Japan	
(86) International Application No	:NA	(72)**Name of Inventor :**
Filing Date	:NA	**1)MAKOTO UMENO**
(87) International Publication No	: NA	**2)TOMOYUKI HORIUCHI**
(61) Patent of Addition to Application Number	:NA	**3)TAKASHI SUYAMA**
Filing Date	:NA	
(62) Divisional to Application Number	:NA	
Filing Date	:NA	

(57) Abstract :
A robot system includes: a robot arm; a robot hand provided on the robot arm; a contact unit provided on the robot hand for rotating a rotation body of a j rotation device which includes the rotation body capable of housing a work and a j fixed part rotatably supporting the rotation body and which performs a predetermined process on the work; a detection unit configured to detect a detection target part provided on the rotation body; and a first control unit configured to control operation of the robot arm and the robot hand so that the contact unit rotates the rotation body up to a predetermined rotational position according to a result of detecting the detection target part by the detection unit.

No. of Pages : 51 No. of Claims : 7

(12) PATENT APPLICATION PUBLICATION
(21) Application No.1815/CHENP/2013 A
(19) INDIA
(22) Date of filing of Application :06/03/2013
(43) Publication Date : 05/09/2014

(54) Title of the invention : PORTABLE TERMINAL REMOTE OPERATION SYSTEM METHOD OF CONTROLLING TRANSMISSION OF DATA BY PORTABLE TERMINAL AND NON TRANSITORY COMPUTER READABLE MEDIUM

(51) International classification :H04M11/00
(31) Priority Document No :2010202694
(32) Priority Date :10/09/2010
(33) Name of priority country :Japan
(86) International Application No :PCT/JP2011/004979
Filing Date :06/09/2011
(87) International Publication No :WO 2012/032762
(61) Patent of Addition to Application Number :NA
Filing Date :NA
(62) Divisional to Application Number :NA
Filing Date :NA

(71)**Name of Applicant :**
1)NEC CASIO Mobile Communications Ltd.
Address of Applicant :1753 Shimonumabe Nakahara ku Kawasaki shi Kanagawa 2118666 Japan
(72)**Name of Inventor :**
1)ICHIMURA Shigehiro
2)SHIOTA Naoki

(57) Abstract :
A remote operation system comprises a user terminal (1) and an intermediary server (2). The intermediary server (2) is configured to execute a registration sequence for commencing remote operation of the user terminal (1) by a support terminal (3). The user terminal (1) further comprises a telephone function unit (15) and is configured to allow transmission of registration data pertaining to remote operation from the user terminal (1) to the intermediary server (2) on condition that the telephone function unit (15) is in use.

No. of Pages : 35 No. of Claims : 30

(12) PATENT APPLICATION PUBLICATION
(19) INDIA
(22) Date of filing of Application :13/03/2013
(21) Application No.1986/CHENP/2013 A
(43) Publication Date : 05/09/2014

(54) Title of the invention : CYLINDER DEVICE WITH BOOST MECHANISM

(51) International classification :B23Q3/06,F15B15/14
(31) Priority Document No :2010277451
(32) Priority Date :24/11/2010
(33) Name of priority country :Japan
(86) International Application No :PCT/JP2011/006114
Filing Date :01/11/2011
(87) International Publication No :WO 2012/070189
(61) Patent of Addition to Application Number :NA
Filing Date :NA
(62) Divisional to Application Number :NA
Filing Date :NA

(71)**Name of Applicant :**
1)KOSMEK LTD.
Address of Applicant :1 5 Murotani 2 chome Nishi ku Kobe shi Hyogo 6512241 Japan
(72)**Name of Inventor :**
1)YOKOTA Hideaki

(57) Abstract :
An output rod (2) is inserted into a housing (1) to be vertically movable. A first piston (21) inserted into the upper part of the housing (1) is affixed to the output rod (2) and a second piston (22) inserted into the lower part of the housing (1) is fitted onto the output rod (2) to be vertically movable. A lock chamber (25) is disposed between the first piston (21) and the second piston (22) and a first release chamber (31) and a second release chamber (32) are disposed on the upper side of the first piston (21) and on the lower side of the second piston (22) respectively. When a pressure fluid is supplied to the lock chamber (25) in a step for driving locking of the output rod (2) first the upwardly driven first piston (21) drives the output rod (2) upward and then the downwardly driven second piston (22) boost drives the output rod (2) upward by means of a boost mechanism (36).

No. of Pages : 48 No. of Claims : 13

(12) PATENT APPLICATION PUBLICATION
(21) Application No.2630/CHE/2013 A
(19) INDIA
(22) Date of filing of Application :17/06/2013
(43) Publication Date : 05/09/2014

(54) Title of the invention : METHODS AND APPARATUS FOR DECODING MULTIMEDIA BROADCAST AND MULTICAST SERVICE (MBMS) DATA

(51) International classification :H04L12/18
(31) Priority Document No :1872/DEL/2012
(32) Priority Date :18/06/2012
(33) Name of priority country :India
(86) International Application No :NA
Filing Date :NA
(87) International Publication No : NA
(61) Patent of Addition to Application Number :NA
Filing Date :NA
(62) Divisional to Application Number :NA
Filing Date :NA

(71)**Name of Applicant :**
1)QUALCOMM INCORPORATED
Address of Applicant :5775 MOREHOUSE DRIVE, SAN DIEGO, CALIFORNIA 92121-1714 U.S.A.
(72)**Name of Inventor :**
1)AMIT MANDIL
2)PRATIK KOTKAR
3)OMAR MOH'D SAID SABBARINI
4)PRASANNA VENKATA SANTOSH KUMAR TALLAPRAGADA

(57) Abstract :
Certain aspects of the present disclosure relate to methods and apparatus for decoding Multimedia Broadcast and Multicast Service (MBMS) data. A User Equipment (UE) may receive a Multicast Control Channel (MCCH) and Multicast Channel Scheduling Information (MSI) in a same subframe of a scheduling period, the MCCH and the MSI relating to one or more MBMS services provided in a Multimedia Broadcast Single Frequency Network (MBSFN) area. The UE may configure at least a first control layer for the one or more MBMS services based on the MCCH and retain the MSI at least until the configuring is complete. The UE may thereafter configure at least a second control layer for the one or more MBMS services based on the MSI.

No. of Pages : 38 No. of Claims : 28

(12) PATENT APPLICATION PUBLICATION
(19) INDIA
(22) Date of filing of Application :30/04/2013
(21) Application No.3360/CHENP/2013 A
(43) Publication Date : 05/09/2014

(54) Title of the invention : INFORMATION PROCESSING SYSTEM AND INFORMATION PROCESSING METHOD

(51) International classification :G06F3/01,G06F3/048
(31) Priority Document No :2010-246134
(32) Priority Date :02/11/2010
(33) Name of priority country :Japan
(86) International Application No :PCT/JP2011/005006
Filing Date :07/09/2011
(87) International Publication No :WO 2012/060039 A1
(61) Patent of Addition to Application Number :NA
Filing Date :NA
(62) Divisional to Application Number :NA
Filing Date :NA

(71)**Name of Applicant :**
1)NEC CASIO Mobile Communications Ltd.
Address of Applicant :1753 Shimonumabe Nakahara ku Kawasaki shi Kanagawa 2118666 Japan
(72)**Name of Inventor :**
1)KITATANI Kenichi
2)ISHIDA Shinjiro

(57) Abstract :
This information processing system comprises a mobile device (10) and an information processing device (20). The mobile device (10) comprises a sensor (11) for obtaining biological information a camera (12) for obtaining an image corresponding to the field of view of a user and first communication means (13). The information processing device (20) comprises second communication means (21) and computation means (22). The computation means (22) determines whether or not to start up the camera (12) on the basis of the biological information obtained by the sensor (11). The computation means (22) extracts a feature from the image obtained by the camera (12) and transmits information relating to the extracted feature to a public network using the second communication means (21) to obtain search results relating to the extracted feature.

No. of Pages : 59 No. of Claims : 24

(12) PATENT APPLICATION PUBLICATION
(19) INDIA
(22) Date of filing of Application :25/03/2013
(21) Application No.2338/CHENP/2013 A
(43) Publication Date : 05/09/2014

(54) Title of the invention : METHOD FOR FEEDING AN ANTISTATIC COMPOUND TO A POLYMERIZATION REACTOR

(51) International classification :C08F10/00,C08F2/00
(31) Priority Document No :10181136.2
(32) Priority Date :28/09/2010
(33) Name of priority country :EPO
(86) International Application No :PCT/EP2011/066679
Filing Date :26/09/2011
(87) International Publication No :WO 2012/041810
(61) Patent of Addition to Application Number :NA
Filing Date :NA
(62) Divisional to Application Number :NA
Filing Date :NA

(71)**Name of Applicant :**
1)BASELL POLYOLEFINE GMBH
Address of Applicant :Br¼hler Strae 60 50389 Wesseling Germany
(72)**Name of Inventor :**
1)BAITA Pietro
2)FERRARI Paolo
3)MINGOZZI Ines
4)PEDRIALI Lorella
5)DI DIEGO Maria
6)PICA Roberta

(57) Abstract :
A method for feeding an antistatic compound to a polymerization reactor the method comprising the steps of: a) dispersing under mixing conditions a catalyst powder and an antistatic compound in a liquid medium so as to form a suspension of the catalyst powder and of the antistatic compound in the liquid medium; b) transferring the obtained suspension to a polymerization reactor.

No. of Pages : 16 No. of Claims : 15

(12) PATENT APPLICATION PUBLICATION
(21) Application No.2403/CHENP/2013 A
(19) INDIA
(22) Date of filing of Application :27/03/2013
(43) Publication Date : 05/09/2014

(54) Title of the invention : LIGHT EMITTING DEVICE AND METHOD FOR MANUFACTURING SAME

(51) International classification :H01L33/50,H01L33/52
(31) Priority Document No :2010194106
(32) Priority Date :31/08/2010
(33) Name of priority country :Japan
(86) International Application No :PCT/JP2011/069402
Filing Date :29/08/2011
(87) International Publication No :WO 2012/029695
(61) Patent of Addition to Application Number :NA
Filing Date :NA
(62) Divisional to Application Number :NA
Filing Date :NA

(71)**Name of Applicant :**
1)NICHIA CORPORATION
Address of Applicant :491 100 Oka Kaminaka cho Anan shi Tokushima 7748601 Japan
(72)**Name of Inventor :**
1)SATO Takashi
2)SHIRAHAMA Satoshi

(57) Abstract :
Provided is a method for manufacturing a light emitting device by which a light emitting device that is prevented from occurrence of color unevenness or yellowing can be manufactured at low cost. Specifically provided is a method for manufacturing a light emitting device comprising a light emitting element and a resin layer that contains phosphor particles and a light reflecting filler which comprises a phosphor sedimentation step wherein the phosphor particles are preferentially sedimented in comparison to the filler.

No. of Pages : 51 No. of Claims : 11

(12) PATENT APPLICATION PUBLICATION
(19) INDIA
(22) Date of filing of Application :27/03/2013
(21) Application No.2404/CHENP/2013 A
(43) Publication Date : 05/09/2014

(54) Title of the invention : METHOD FOR MAPPING OXYGEN CONCENTRATION

(51) International classification :G01N27/04
(31) Priority Document No :1003510
(32) Priority Date :02/09/2010
(33) Name of priority country :France
(86) International Application No :PCT/FR2011/000482
Filing Date :30/08/2011
(87) International Publication No :WO 2012/028791
(61) Patent of Addition to Application Number :NA
Filing Date :NA
(62) Divisional to Application Number :NA
Filing Date :NA

(71)**Name of Applicant :**
1)COMMISSARIAT A LENERGIE ATOMIQUE ET AUX ENERGIES ALTERNATIVES
Address of Applicant :25 rue Leblanc Btiment Le Ponant D F 75015 Paris France
(72)**Name of Inventor :**
1)VEIRMAN Jordi
2)DUBOIS Sbastien
3)ENJALBERT Nicolas

(57) Abstract :
The invention relates to a method for determining the oxygen concentration of a sample of a semi conductor material said method comprising a step of heat treating (F1) the sample in order to form thermal donors the measurement (F2) of the resistivity in one area of the sample the determination (F3) of the concentration of thermal donors from a relation expressing the mobility of the charge carriers according to a concentration of ionised doping impurities by adding to the concentration of doping impurities four times the thermal donor concentration and of the measured resistivity value. The method also comprises the determination (F4) of the oxygen concentration from the thermal donor concentration.

No. of Pages : 19 No. of Claims : 8

(12) PATENT APPLICATION PUBLICATION
(19) INDIA
(22) Date of filing of Application :11/06/2013
(21) Application No.2544/CHE/2013 A
(43) Publication Date : 05/09/2014

(54) Title of the invention : YARN WINDING DEVICE

(51) International classification :B65H
(31) Priority Document No :2012-167242
(32) Priority Date :27/07/2012
(33) Name of priority country :Japan
(86) International Application No :NA
Filing Date :NA
(87) International Publication No : NA
(61) Patent of Addition to Application Number :NA
Filing Date :NA
(62) Divisional to Application Number :NA
Filing Date :NA

(71)**Name of Applicant :**
1)MURATA MACHINERY, LTD.
Address of Applicant :3 MINAMI OCHIAI-CHO, KISSHOIN, MINAMI-KU, KYOTO-SHI, KYOTO 601-8326 Japan
(72)**Name of Inventor :**
1)KATSUSHI MINAMINO
2)KAZUHIKO NAKADE

(57) Abstract :
A yarn winding unit (1) includes a yarn supplying section (2) that supplies a yarn (Y), a winding section (12) that winds the yarn (Y) into a package (P), the winding section including a winding drum that makes contact with an outer peripheral surface of the package and rotates, a yarn running speed detecting section (10) that detects a speed of the yarn (Y) running between the yarn supplying section (2) and the winding section (12), and an error detecting section (14a) that calculates a speed ratio by dividing the yarn running speed by a circumferential speed of the winding drum (16), and detects presence/absence of a winding error based on the speed ratio.

No. of Pages : 40 No. of Claims : 7

(12) PATENT APPLICATION PUBLICATION
(21) Application No.340/CHE/2012 A
(19) INDIA
(22) Date of filing of Application :30/01/2012
(43) Publication Date : 05/09/2014

(54) Title of the invention : CASHEW KERNELS GRADING MACHINE

(51) International classification :B07B
(31) Priority Document No :NA
(32) Priority Date :NA
(33) Name of priority country :NA
(86) International Application No :NA
Filing Date :NA
(87) International Publication No : NA
(61) Patent of Addition to Application Number :NA
Filing Date :NA
(62) Divisional to Application Number :NA
Filing Date :NA

(71)**Name of Applicant :**
1)MR. SASISEKAR KRISHNAMOORTHY
Address of Applicant :P-250, 9TH MAIN, 10TH SECTOR, LIC COLONY, JB NAGAR, BANGALORE - 75 Karnataka India
(72)**Name of Inventor :**
1)MR. SASISEKAR KRISHNAMOORTHY

(57) Abstract :
The present invention relates to small sized irregular objects grading machine which has artificial intelligence with multi-vision facility. It has been designed to sort statistically distributed small sized irregular objects, specifically to illustrate, cashew kernels based upon their natural properties and requirements. The machine has multiple unique components that have been specifically designed for the sake of multiple categorization unlike other conventional sorting machines which performs binary sorting of the objects. The machine employs free-queuing mechanism of objects under inspection, vacuum based pick and place mechanism aided to place the objects on the conveyor and unique normally non-contact-ejecting cup mechanism providing a facility for dropping the object into chutes at multiple synchronized positions of the conveyor based on the multi-vision system categorization. The combined effect of all the mechanisms make the machine rugged enough to identify many types of small sized irregular objects and segregate them based upon the category that can be defined.

No. of Pages : 33 No. of Claims : 10

(12) PATENT APPLICATION PUBLICATION
(19) INDIA
(22) Date of filing of Application :26/03/2013
(21) Application No.2382/CHENP/2013 A
(43) Publication Date : 05/09/2014

(54) Title of the invention : METHOD OF PRODUCING A LAYER OF A VULCANIZED SILICONE RUBBER COMPOSITION HAVING AN IMPROVED ADHESION TO THE SUBSTRATE SURFACE

(51) International classification :C08L83/04,C09D183/04,C09D5/00
(31) Priority Document No :10183115.4
(32) Priority Date :30/09/2010
(33) Name of priority country :EPO
(86) International Application No :PCT/EP2011/065509
Filing Date :08/09/2011
(87) International Publication No :WO 2012/041674
(61) Patent of Addition to Application Number :NA
Filing Date :NA
(62) Divisional to Application Number :NA
Filing Date :NA

(71)**Name of Applicant :**
1)ABB RESEARCH LTD
Address of Applicant :Affolternstrasse 44 CH 8050 Z¼rich Switzerland
(72)**Name of Inventor :**
1)SCHNEIDER Marco
2)MEIER Patrick
3)KORNMANN Xavier
4)VAN LOON Jan

(57) Abstract :
Method of producing a layer of a UV cured silicone rubber composition on a substrate surface comprising applying a primer composition to the substrate surface and hardening said primer composition followed by applying a UV curable silicone rubber composition and UV curing said curable silicone rubber composition characterized in that at least one UV sensitive crosslinking catalyst selected from compounds which initiate and promote curing of UV curable silicone rubber compositions is added to the silicone primer composition in any desired sequence before during or after hardening of said silicone primer composition.

No. of Pages : 32 No. of Claims : 26

(12) PATENT APPLICATION PUBLICATION
(21) Application No.2384/CHE/2013 A
(19) INDIA
(22) Date of filing of Application :31/05/2013
(43) Publication Date : 05/09/2014

(54) Title of the invention : SUPPORT BRACKET FOR A SUPPORT STRUCTURE COMPRISING A CROSSMEMBER FOR A MOTOR VEHICLE

(51) International classification :B62D21/00
(31) Priority Document No :10 2012 011 416.8
(32) Priority Date :08/06/2012
(33) Name of priority country :Germany
(86) International Application No :NA
Filing Date :NA
(87) International Publication No : NA
(61) Patent of Addition to Application Number :NA
Filing Date :NA
(62) Divisional to Application Number :NA
Filing Date :NA

(71)**Name of Applicant :**
1)MAN TRUCK & BUS AG
Address of Applicant :DACHAUER STR. 667, 80995 MUNCHEN Germany
(72)**Name of Inventor :**
1)SERKAN ACER
2)ANDREAS NOEBAUER
3)ROBERT BARNREITER
4)ANDREAS EBERLE
5)ALEXANDER VRECKO
6)JURGEN ZIEHLKE
7)DANIEL CONCEPCION MO
8)OSCAR MASSACHI UEDA

(57) Abstract :
The invention relates to a support bracket (1) for a support structure comprising a crossmember (20) for a motor vehicle, in particular a frame or steering structure, preferably for a commercial vehicle. The support bracket (1) comprises a connecting device (10) for the crossmember (20) and is designed in such a way that it can be used at both ends (LS1, LS2) of the crossmember (20). The invention furthermore comprises a support structure having a crossmember (20) and two support brackets (1) according to the invention.

No. of Pages : 33 No. of Claims : 21

(12) PATENT APPLICATION PUBLICATION
(19) INDIA
(22) Date of filing of Application :28/03/2013
(21) Application No.2448/CHENP/2013 A
(43) Publication Date : 05/09/2014

(54) Title of the invention : STABLE PRODUCTION OF LENTIVIRAL VECTORS

(51) International classification :C12N15/866,C12N15/867,C12N7/02
(31) Priority Document No :10175088.3
(32) Priority Date :02/09/2010
(33) Name of priority country :EPO
(86) International Application No :PCT/EP2011/065090
Filing Date :01/09/2011
(87) International Publication No :WO 2012/028681
(61) Patent of Addition to Application Number :NA
Filing Date :NA
(62) Divisional to Application Number :NA
Filing Date :NA

(71)**Name of Applicant :**
1)MOLMED SPA
Address of Applicant :Via Olgettina 58 I 20132 Milan Italy
(72)**Name of Inventor :**
1)BOVOLENTA Chiara
2)STORNAIUOLO Anna
3)RIZZARDI Paolo
4)MAVILIO Fulvio

(57) Abstract :
The present invention provides new stable packaging cell lines and producer cell lines as well as methods to obtain them and a new method to produce lentiviral vectors using such cell lines. New methods and packaging cell lines of the invention are generated using a baculo AAV hybrid system for stable expression of structural and regulatory lentiviral proteins such system comprising a baculoviral backbone containing an integration cassette flanked by AAV ITR in combination with a plasmid encoding rep protein. This system allows to obtain a stable integration of the structural and regulatory HIV 1 proteins gag/pol and rev. The system allows to obtain a first intermediate including only the structural and regulatory HIV proteins gag/pol and rev to be used as starting point to obtain stable packaging cell lines as well as producer cell lines.

No. of Pages : 55 No. of Claims : 30

(12) PATENT APPLICATION PUBLICATION
(21) Application No.2655/CHE/2013 A
(19) INDIA
(22) Date of filing of Application :19/06/2013
(43) Publication Date : 05/09/2014

(54) Title of the invention : FEED TROUGH FOR A PROCESSING APPARATUS

(51) International classification :B07B7/00,B07C5/00
(31) Priority Document No :61/662,458
(32) Priority Date :21/06/2012
(33) Name of priority country :U.S.A.
(86) International Application No :NA
Filing Date :NA
(87) International Publication No : NA
(61) Patent of Addition to Application Number :NA
Filing Date :NA
(62) Divisional to Application Number :NA
Filing Date :NA

(71)**Name of Applicant :**
1)LAITRAM, L.L.C.
Address of Applicant :220 LAITRAM LANE, HARAHAN, LOUISIANA 70123 U.S.A.
(72)**Name of Inventor :**
1)CHRISTOPHER G. GREVE

(57) Abstract :
A feed trough for a grader or other solid object processing system. The feed trough includes a plurality of feed channels, each having at least one flexible flap extending from a discharge end for transitioning a product from the feed channel to a processing region. Two converging flexible flaps may extend from the discharge end and contact a processing channel for guiding product to the processing channel.

No. of Pages : 38 No. of Claims : 21

(12) PATENT APPLICATION PUBLICATION
(19) INDIA
(22) Date of filing of Application :07/05/2013
(21) Application No.3574/CHENP/2013 A
(43) Publication Date : 05/09/2014

(54) Title of the invention : COLON SCREENING BY USING MAGNETIC PARTICLE IMAGING

(51) International classification :A61B5/05
(31) Priority Document No :10190794.7
(32) Priority Date :11/11/2010
(33) Name of priority country :EPO
(86) International Application No :PCT/IB2011/054953
Filing Date :07/11/2011
(87) International Publication No :WO 2012/063186
(61) Patent of Addition to Application Number :NA
Filing Date :NA
(62) Divisional to Application Number :NA
Filing Date :NA

(71)**Name of Applicant :**
1)KONINKLIJKE PHILIPS ELECTRONICS N.V.
Address of Applicant :High Tech Campus 5 NL 5656 AE Eindhoven Netherlands
2)PHILIPS INTELLECTUAL PROPERTY & STANDARDS GMBH
(72)**Name of Inventor :**
1)BORGERT Jrn
2)SCHMALE Ingo
3)RAHMER J¼rgen Erwin
4)GLEICH Bernhard
5)KUHN Michael Harald

(57) Abstract :
The present invention relates to a method for colon screening by using Magnetic Particle Imaging comprising the steps of: (a) generating an imaging magnetic field with a spatial distribution of the magnetic field strength such that the area of examination in the colon consists of a first sub area of the colon with lower magnetic field strength where the magnetization of a magnetic particle which was pre delivered to the colon is not saturated and a second sub area of the colon with a higher magnetic field strength where the magnetization of said magnetic particle is saturated;(b) changing the spatial location of both sub areas in the area of examination so that the magnetization of said particles changes locally; (c) acquiring signals that depend on the magnetization in the area of examination influenced by this change; and (d) evaluating said signals to obtain information about the spatial distribution of the signals in the area of examination. The area of examination in the colon preferably comprises a portion or segment of the colon and steps (a) to (c) may be carried out during an entire peristaltic cycle in said colon portion or segment. The present invention further relates to a corresponding method for collecting data the use of a magnetic particle for colon screening via Magnetic Particle Imaging a food stuff or liquid for in vivo diagnostic use comprising a magnetic particle and a method for preparing a patient for colon screening by using Magnetic Particle Imaging.

No. of Pages : 37 No. of Claims : 10

(12) PATENT APPLICATION PUBLICATION
(19) INDIA
(22) Date of filing of Application :06/05/2013
(21) Application No.3540/CHENP/2013 A
(43) Publication Date : 05/09/2014

(54) Title of the invention : LOCATION BASED WIRELESS MEDICAL DEVICE

(51) International classification :A61B5/00
(31) Priority Document No :61/410992
(32) Priority Date :08/11/2010
(33) Name of priority country :U.S.A.
(86) International Application No :PCT/IB2011/054732
Filing Date :24/10/2011
(87) International Publication No :WO 2012/063154
(61) Patent of Addition to Application Number :NA
Filing Date :NA
(62) Divisional to Application Number :NA
Filing Date :NA

(71)**Name of Applicant :**
1)KONINKLIJKE PHILIPS ELECTRONICS N.V.
Address of Applicant :High Tech Campus 5 NL 5656 AE Eindhoven Netherlands
(72)**Name of Inventor :**
1)PATEL Maulin Dahyabhai

(57) Abstract :
A personal area network (13) includes a plurality of wireless medical devices (12) which monitors physiological patient data and/or deliver therapy to the patient. The medical devices (12)each include a location management module (46) which controls a transceiver (40) to operate according to a operating profile associated with the geographical region in which the devices (12) currently reside. The operating profiles include at least one of transmission frequency duty cycle and maximum transmit power as mandated by local regulatory requirements. A wireless hub (10) as part of the personal area network (13) communicates with the wireless medical devices (12) and interfaces them with an infrastructure network (30). The hub (10) includes a location management module (46) which receives a current geographical position and determines the corresponding geographical region and retrieves an operating profile(s) associated with the region. The hub advertises the operating profile to the wireless medical devices (12).

No. of Pages : 19 No. of Claims : 20

(12) PATENT APPLICATION PUBLICATION
(19) INDIA
(22) Date of filing of Application :06/05/2013
(21) Application No.3541/CHENP/2013 A
(43) Publication Date : 05/09/2014

(54) Title of the invention : SYSTEM AND METHOD FOR EXCHANGING DUTY CYCLE INFORMATION IN WIRELESS NETWORKS

(51) International classification :H04L29/08
(31) Priority Document No :61/410989
(32) Priority Date :08/11/2010
(33) Name of priority country :U.S.A.
(86) International Application No :PCT/IB2011/054896
Filing Date :03/11/2011
(87) International Publication No :WO 2012/063172
(61) Patent of Addition to Application Number :NA
Filing Date :NA
(62) Divisional to Application Number :NA
Filing Date :NA

(71)**Name of Applicant :**
1)KONINKLIJKE PHILIPS ELECTRONICS N.V.
Address of Applicant :High Tech Campus 5 NL 5656 AE Eindhoven Netherlands
(72)**Name of Inventor :**
1)PATEL Maulin Dahyabhai

(57) Abstract :
A wireless medical device (12) includes at least one sensor (14 18 22) which monitors physiological data of a patient or an actuator (26) which delivers therapy to the patient. A wireless transceiver (40) transmits and receives information packets related to at least one of the monitored physiological data and the delivered therapy. The wireless transceiver (40) has a duty cycle limit. The duty cycle module (50) determines the duty cycle parameters for the wireless transceiver (40) according to the duty cycle limit. A communication module (60) controls the transceiver (40) to broadcast at least one duty cycle parameter when transmitting an information packet or when acknowledging receiving an information packet from a neighboring wireless medical device.

No. of Pages : 25 No. of Claims : 20

(12) PATENT APPLICATION PUBLICATION
(19) INDIA
(22) Date of filing of Application :06/05/2013
(21) Application No.3542/CHENP/2013 A
(43) Publication Date : 05/09/2014

(54) Title of the invention : METHOD OF CONTINUOUS PREDICTION OF PATIENT SEVERITY OF ILLNESS MORTALITY AND LENGTH OF STAY

(51) International classification :G06F19/00
(31) Priority Document No :61/410984
(32) Priority Date :08/11/2010
(33) Name of priority country :U.S.A.
(86) International Application No :PCT/IB2011/054884
Filing Date :03/11/2011
(87) International Publication No :WO 2012/063166
(61) Patent of Addition to Application Number :NA
Filing Date :NA
(62) Divisional to Application Number :NA
Filing Date :NA

(71)**Name of Applicant :**
1)KONINKLIJKE PHILIPS ELECTRONICS N.V.
Address of Applicant :High Tech Campus 5 NL 5656 AE Eindhoven Netherlands
(72)**Name of Inventor :**
1)SAEED Mohammed

(57) Abstract :
A method for predicting a patient s outcome variable such as a probability of mortality/recovery includes accessing at least one of a plurality past patients data fields including physiological and/or laboratory data and a time of stay indicating how long each patient had been under care at the time. An outcome variable estimation algorithm is generated by data mining from a plurality of past patients physiological and/or laboratory data corresponding time of stay and associated outcome variables. A current patient s outcome variable is determined from the current patient s physiological and/or laboratory data the current time of stay and the outcome variable estimation algorithm.

No. of Pages : 21 No. of Claims : 20

(12) PATENT APPLICATION PUBLICATION
(21) Application No.380/CHE/2012 A
(19) INDIA
(22) Date of filing of Application :01/02/2012
(43) Publication Date : 05/09/2014

(54) Title of the invention : AUTHENTIC TRACKING WATCH

(51) International classification :G11B
(31) Priority Document No :NA
(32) Priority Date :NA
(33) Name of priority country :NA
(86) International Application No :NA
Filing Date :NA
(87) International Publication No : NA
(61) Patent of Addition to Application Number :NA
Filing Date :NA
(62) Divisional to Application Number :NA
Filing Date :NA

(71)**Name of Applicant :**
1)SATISH KUMAR. D
Address of Applicant :37, WEAVERS COLONY, ONDIPUDUR, COIMBATORE, TAMIL NADU - 641 016 Tamil Nadu India
(72)**Name of Inventor :**
1)SATISH KUMAR.D

(57) Abstract :
The GPS based personnel tracking wrist watch which has a reliable tamper alert system used for children's security purpose. The wrist watch contains GPS and GSM modules to fetch and transfer the location data for tracking. The most reliable tamper alert system which works based on biometric access with actuators which allows the watch to be removed only by the guardians. The wire is passed through the straps and made a closed loop circuit, which alerts the guardians when the watch was removed forcibly.

No. of Pages : 28 No. of Claims : 5

(12) PATENT APPLICATION PUBLICATION
(19) INDIA
(22) Date of filing of Application :24/06/2013
(21) Application No.2740/CHE/2013 A
(43) Publication Date : 05/09/2014

(54) Title of the invention : METHOD AND DEVICE FOR CONTROLLING AT LEAST ONE BRAKE VALVE

(51) International classification :B60T13/00,B60T13/04
(31) Priority Document No :10 2012 012 875.4
(32) Priority Date :28/06/2012
(33) Name of priority country :Germany
(86) International Application No :NA
Filing Date :NA
(87) International Publication No : NA
(61) Patent of Addition to Application Number :NA
Filing Date :NA
(62) Divisional to Application Number :NA
Filing Date :NA

(71)**Name of Applicant :**
1)MAN TRUCK & BUS AG
Address of Applicant :DACHAUER STR. 667, 80995 MUNCHEN Germany
(72)**Name of Inventor :**
1)BERNER, ARMIN
2)KRAFT, FLORIAN
3)ROTHLEIN, BERNHARD

(57) Abstract :
The invention concerns a method and a device for controlling at least one brake valve in the exhaust tract of a four-stroke internal combustion engine which is charged via at least one exhaust turbocharger, in particular for trucks, with at least one cylinder and a valve control with an additional brake function, wherein when an exhaust gas back-pressure is created via the brake valve, the at least one exhaust valve can be transferred into intermediate opening positions, and with a charge pressure line which is connected to the compressor of the exhaust turbocharger and to which furthermore is connected an exhaust gas recirculation line which is controlled via an exhaust gas recirculation valve and connected with the exhaust tract upstream of the brake valve. It is proposed that to achieve an improved operating behaviour of the internal combustion engine, even when the internal combustion engine (1) is in operating mode, the brake valve (20) is controlled to increase the exhaust gas back-pressure, wherein the exhaust gas back-pressure is always held below a threshold value which excludes a response of the additional brake device (EVB).

No. of Pages : 19 No. of Claims : 15

(12) PATENT APPLICATION PUBLICATION
(19) INDIA
(22) Date of filing of Application :07/05/2013
(21) Application No.3576/CHENP/2013 A
(43) Publication Date : 05/09/2014

(54) Title of the invention : CARRYING CASE FOR DEFIBRILLATOR AND ACCESSORIES

(51) International classification :A61N1/39
(31) Priority Document No :61/412524
(32) Priority Date :11/11/2010
(33) Name of priority country :U.S.A.
(86) International Application No :PCT/IB2011/055016
Filing Date :10/11/2011
(87) International Publication No :WO 2012/063218
(61) Patent of Addition to Application Number :NA
Filing Date :NA
(62) Divisional to Application Number :NA
Filing Date :NA

(71)**Name of Applicant :**
1)KONINKLIJKE PHILIPS ELECTRONICS N.V.
Address of Applicant :High Tech Campus 5 NL 5656 AE Eindhoven Netherlands
(72)**Name of Inventor :**
1)ROACH Zebrick
2)FISCHER Kurt Vincent
3)POWERS Daniel J.
4)GRIESSER Hans Patrick
5)EERDEN Jacco Christof
6)RICHARD Christian James

(57) Abstract :
A substantially rigid defibrillator carrying case having a hinged side a latch disposed on a latch side opposite the hinged side and a handle disposed on a handle side disposed between the hinged side and the latch side. The carrying case hinge is constructed for greater structural integrity when the case is open and to have a flush mount profile when the case is closed.

No. of Pages : 36 No. of Claims : 8

(12) PATENT APPLICATION PUBLICATION
(19) INDIA
(22) Date of filing of Application :07/05/2013
(21) Application No.3577/CHENP/2013 A
(43) Publication Date : 05/09/2014

(54) Title of the invention : CARRYING CASE FOR DEFIBRILLATOR WITH INTEGRATED BUTTON TESTER

(51) International classification :A44B
(31) Priority Document No :61/412520
(32) Priority Date :11/11/2010
(33) Name of priority country :U.S.A.
(86) International Application No :PCT/IB2011/055011
Filing Date :10/11/2011
(87) International Publication No :WO 2012/063215
(61) Patent of Addition to Application Number :NA
Filing Date :NA
(62) Divisional to Application Number :NA
Filing Date :NA

(71)**Name of Applicant :**
1)KONINKLIJKE PHILIPS ELECTRONICS N.V.
Address of Applicant :High Tech Campus 5 NL 5656 AE Eindhoven Netherlands
(72)**Name of Inventor :**
1)HALSNE Eric
2)ROACH Zebrick
3)FISCHER Kurt Vincent
4)POWERS Dan J.
5)OCHS Dennis E.
6)GRIESSER Hans Patrick
7)EERDEN Jacco Christof
8)RICHARD Christian James

(57) Abstract :
A substantially rigid defibrillator carrying case having a hinged side a latch disposed on a latch side opposite the hinged side and a handle disposed on a handle side disposed between the hinged side and the latch side. The carrying case is constructed without protrusions and with a rigid handle which combine to allow easy removal and deployment of the contents from a vehicle storage location to a cardiac arrest patient. The carrying case integrates a actuator to periodically test the operation of the defibrillator push buttons.

No. of Pages : 29 No. of Claims : 7

(12) PATENT APPLICATION PUBLICATION
(21) Application No.402/CHE/2012 A
(19) INDIA
(22) Date of filing of Application :02/02/2012
(43) Publication Date : 05/09/2014

(54) Title of the invention : DOUBLE LAYER DENIM LIKE STRETCHABLE FABRIC

(51) International classification	:D06P 3/00	
(31) Priority Document No	:NA	
(32) Priority Date	:NA	
(33) Name of priority country	:NA	
(86) International Application No	:NA	
Filing Date	:NA	
(87) International Publication No	: NA	
(61) Patent of Addition to Application Number	:NA	
Filing Date	:NA	
(62) Divisional to Application Number	:NA	
Filing Date	:NA	

(71)**Name of Applicant :**
1)MANIKAM RAMASWAMI
Address of Applicant :NO. 5, SATHYA NARAYANA AVENUE, BOATS CLUB ROAD, R.A. PURAM, CHENNAI - 600 028 Tamil Nadu India
(72)**Name of Inventor :**
1)MANIKAM RAMASWAMI

(57) Abstract :
The present invention relates to composite double layer denim like stretchable fabric comprising plurality of at least two separate layers of warp yarn and plurality of weft yarn. The warp yarn could be stretchable or non-stretchable cotton yarn and the weft yarn could be stretchable or non-stretchable non-cellulosic fibre yarn. The warp yarn threads are interspaced to sink the intersecting yarn in the weft. Both top and bottom surface layers of the fabric have more exposure of warp yarn, while the weft yarn get sunk in between the warp yarn thereby the fabric eliminates the contact of weft yarn ensuring good moisture management, stretchability, low level of fabric pilling and static current. The fabric have stretchability in warp direction or weft direction or all directions by using stretchable yarn in the warp or weft or both warp and weft.

No. of Pages : 12 No. of Claims : 10

(12) PATENT APPLICATION PUBLICATION
(19) INDIA
(22) Date of filing of Application :28/05/2013
(21) Application No.4109/CHENP/2013 A
(43) Publication Date : 05/09/2014

(54) Title of the invention : INERTIAL SENSOR AIDED HEADING AND POSITIONING FOR GNSS VEHICLE NAVIGATION

(51) International classification :G01C21/16
(31) Priority Document No :61/419786
(32) Priority Date :03/12/2010
(33) Name of priority country :U.S.A.
(86) International Application No :PCT/US2011/063182
Filing Date :02/12/2011
(87) International Publication No :WO 2012/075464
(61) Patent of Addition to Application Number :NA
Filing Date :NA
(62) Divisional to Application Number :NA
Filing Date :NA

(71)**Name of Applicant :**
1)QUALCOMM Incorporated
Address of Applicant :ATTN: International IP Administration 5775 Morehouse Drive San Diego California 92121 1714 U.S.A.
(72)**Name of Inventor :**
1)CZOMPO Joseph
2)OPSHAUG Guttorm R.
3)CHHOKRA Kumar Gaurav
4)BIACS Zoltan F.
5)RILEY Wyatt T.

(57) Abstract :
An apparatus and method for providing an improved heading estimate of a mobile device in a vehicle is presented. First the mobile device determines if it is mounted in a cradle attached to the vehicle; if so inertia sensor data may be valid. While in a mounted stated the mobile device determines whether it has been rotated in the cradle; if so inertia sensor data may no longer be reliable and a recalibration to determine a new relative orientation between the vehicle and the mobile device is needed. If the mobile device is mounted and not recently rotated heading data from multiple sensors (e.g. GPS gyroscope accelerometer) may be computed and combined to form the improved heading estimate. This improved heading estimate may be used to form an improved velocity estimate. The improved heading estimate may also be used to compute a bias to correct a gyroscope.

No. of Pages : 80 No. of Claims : 21

(12) PATENT APPLICATION PUBLICATION
(21) Application No.2092/CHENP/2013 A
(19) INDIA
(22) Date of filing of Application :15/03/2013
(43) Publication Date : 05/09/2014

(54) Title of the invention : AQUEOUS MIXTURES COMPRISING AMINOALKYL CONTAINING POLYORGANOSILOXANES AND SILICONE RESINS

(51) International classification :C08L83/08,C08J3/03
(31) Priority Document No :10177523.7
(32) Priority Date :20/09/2010
(33) Name of priority country :EPO
(86) International Application No :PCT/EP2011/065769
Filing Date :12/09/2011
(87) International Publication No :WO 2012/038293
(61) Patent of Addition to Application Number :NA
Filing Date :NA
(62) Divisional to Application Number :NA
Filing Date :NA

(71)**Name of Applicant :**
1)WACKER CHEMIE AG
Address of Applicant :Hanns Seidel Platz 4 81737 M¼nchen Germany
(72)**Name of Inventor :**
1)MERGET Markus
2)BECKER Richard
3)WIMMER Franz

(57) Abstract :
The invention relates to water containing mixtures (M) comprising 1) 100 parts by weight of one or more liquid aminoalkyl containing polyorganosiloxanes (P) comprising at least 80 mol% of units selected from units of the general formulae la lb II and III RSiO (la) / R1RSiO (lb) RSiO (II) RRSiO (III) where R to R a and b are each as defined in Claim 1 wherein in the polyorganosiloxanes (P) the average ratio of the sum of units of the general formulae la and lb to the sum of units of the general formulae II and III is in the range from 0.5 to 500 the average ratio of units II to III being in the range from 1.86 to 100 and the polyorganosiloxanes (P) have an average amine number of at least 0.01 mequiv/g 2) at least 1 part by weight of one or more silicone resins (S) defined in Claim 1 3) protonating agent 4) at least 10 parts by weight of water and 5) at most 5 parts by weight of emulsifier.

No. of Pages : 27 No. of Claims : 14

(12) PATENT APPLICATION PUBLICATION
(19) INDIA
(22) Date of filing of Application :25/03/2013
(21) Application No.2350/CHENP/2013 A
(43) Publication Date : 05/09/2014

(54) Title of the invention : RESIN COMPOSITION AND MOLDED ARTICLE

(51) International classification :C08L23/26,C08J11/06,C08K3/00
(31) Priority Document No :2010219508
(32) Priority Date :29/09/2010
(33) Name of priority country :Japan
(86) International Application No :PCT/JP2011/070828
Filing Date :13/09/2011
(87) International Publication No :WO 2012/043215
(61) Patent of Addition to Application Number :NA
Filing Date :NA
(62) Divisional to Application Number :NA
Filing Date :NA

(71)**Name of Applicant :**
1)SEKISUI CHEMICAL CO. LTD.
Address of Applicant :4 4 Nishitemma 2 chome Kita ku Osaka shi Osaka 5308565 Japan
(72)**Name of Inventor :**
1)NISHIOKA Takuya
2)HIRAYAMA Kenji
3)NAKAMURA Akira

(57) Abstract :
Provided are a resin composition and molded article having good molding properties and high water resistance. This resin composition comprises an inorganic powder and a silane modified polyolefin resin. The content of the inorganic powder is 60% by weight per 100% by weight of this resin composition. This molded article is obtained by molding the resin composition.

No. of Pages : 37 No. of Claims : 13

(12) PATENT APPLICATION PUBLICATION
(19) INDIA
(22) Date of filing of Application :25/03/2013
(21) Application No.2352/CHENP/2013 A
(43) Publication Date : 05/09/2014

(54) Title of the invention : METHODS SYSTEMS AND DEVICES FOR HUMIDIFYING A RESPIRATORY TRACT

(51) International classification :A61M16/16
(31) Priority Document No :61/388528
(32) Priority Date :30/09/2010
(33) Name of priority country :U.S.A.
(86) International Application No :PCT/US2011/054446
Filing Date :30/09/2011
(87) International Publication No :WO 2012/045051
(61) Patent of Addition to Application Number :NA
Filing Date :NA
(62) Divisional to Application Number :NA
Filing Date :NA

(71)**Name of Applicant :**
1)BREATHE TECHNOLOGIES INC.
Address of Applicant :175 Technology Drive Suite 100 Irvine California 92618 U.S.A.
(72)**Name of Inventor :**
1)WONDKA Anthony D.
2)CIPOLLONE Joseph
3)KASSANIS George A.
4)ALLUM Todd W.
5)BRAMBILLA Enrico

(57) Abstract :
Systems and methods are provided for humidifying ventilation gas. Systems and methods may include a nasal interface apparatus for receiving ventilation gas from gas delivery tubing and for humidifying ventilation gas. The nasal interface apparatus may have one or more channels within the nasal interface to deliver gas from a gas delivery circuit to a patient s nose; one or more structures in fluid communication with the one or more channels to direct ventilation gas to the patient s nose; and a hygroscopic material within the nasal interface in the flow path of the ventilation gas.

No. of Pages : 39 No. of Claims : 37

(12) PATENT APPLICATION PUBLICATION
(21) Application No.2624/CHE/2013 A
(19) INDIA
(22) Date of filing of Application :17/06/2013
(43) Publication Date : 05/09/2014

(54) Title of the invention : TANDEM VANE COMPRESSOR

(51) International classification	:F04C28/06
(31) Priority Document No	:2012-138721
(32) Priority Date	:20/06/2012
(33) Name of priority country	:Japan
(86) International Application No	:NA
Filing Date	:NA
(87) International Publication No	: NA
(61) Patent of Addition to Application Number	:NA
Filing Date	:NA
(62) Divisional to Application Number	:NA
Filing Date	:NA

(71)**Name of Applicant :**
1)KABUSHIKI KAISHA TOYOTA JIDOSHOKKI
Address of Applicant :2-1, TOYODA-CHO, KARIYA-SHI, AICHI-KEN Japan
(72)**Name of Inventor :**
1)KAZUO KOBAYASHI
2)HIROAKI KAYAKAWA
3)SHINICHI SATO

(57) Abstract :
A tandem vane compressor includes a housing; a rotary shaft; cylinder blocks; partitions cooperating with the cylinder blocks to form rotor chambers in the housing; and rotors each having slots in which vanes are slidably inserted, each vane and its corresponding slot forming a back pressure chamber therebetween. One of the partitions has a valve chamber in communication with discharge pressure region and provided with a valve having a valve member movable to close and open the valve chamber and an urging member urging the valve member to open the valve chamber. The one of the partitions further has a communication passage connected to the valve chamber and branched to connect to the back pressure chambers of the respective rotors. The refrigerant present in the discharge pressure region is introduced through the valve chamber and the communication passage into the back pressure chambers of the respective rotors.

No. of Pages : 29 No. of Claims : 4

(12) PATENT APPLICATION PUBLICATION
(21) Application No.4115/CHENP/2013 A
(19) INDIA
(22) Date of filing of Application :28/05/2013
(43) Publication Date : 05/09/2014

(54) Title of the invention : ADAPTIVE SUPPORT FOR INTERPOLATING VALUES OF SUB PIXELS FOR VIDEO CODING

(51) International classification :H04N7/26
(31) Priority Document No :61/422051
(32) Priority Date :10/12/2010
(33) Name of priority country :U.S.A.
(86) International Application No :PCT/US2011/063730
Filing Date :07/12/2011
(87) International Publication No :WO 2012/078748
(61) Patent of Addition to Application Number :NA
Filing Date :NA
(62) Divisional to Application Number :NA
Filing Date :NA

(71)**Name of Applicant :**
1)QUALCOMM INCORPORATED
Address of Applicant :5775 Morehouse Drive Attn: International IP Administration San Diego CA 92121 1714 U.S.A.
(72)**Name of Inventor :**
1)PANCHAL Rahul P.
2)KARCZEWICZ Marta
3)CHEN Peisong

(57) Abstract :
This disclosure describes techniques for calculating values of sub integer pixels applied by an encoder and a decoder to encode blocks of video data. In one example a video encoder is configured to receive values for a full integer pixel positions of a reference sample apply an interpolation filter to a first set of the values for the full integer pixel positions to calculate a value for a first sub integer pixel of one of the full integer pixel positions apply the interpolation filter to a second different set of the values for the full integer pixel positions to calculate a value for a second different sub integer pixel of the one of the full integer pixel positions encode a current block of pixels using a motion vector that points to one of the first sub integer pixel and the second sub integer pixel.

No. of Pages : 75 No. of Claims : 50

(12) PATENT APPLICATION PUBLICATION
(19) INDIA
(22) Date of filing of Application :20/03/2013
(21) Application No.2227/CHENP/2013 A
(43) Publication Date : 05/09/2014

(54) Title of the invention : CONTINUOUS MANUFACTURING METHOD FOR ELECTRODE MATERIAL

(51) International classification :H01M4/505,C01G23/00,H01M4/485
(31) Priority Document No :2010189949
(32) Priority Date :26/08/2010
(33) Name of priority country :Japan
(86) International Application No :PCT/JP2011/069208
Filing Date :25/08/2011
(87) International Publication No :WO 2012/026539
(61) Patent of Addition to Application Number :NA
Filing Date :NA
(62) Divisional to Application Number :NA
Filing Date :NA

(71)**Name of Applicant :**
1)UBE INDUSTRIES LTD.
Address of Applicant :1978 96 Oaza Kogushi Ube shi Yamaguchi 7558633 Japan
(72)**Name of Inventor :**
1)TAKEMOTO Hirofumi
2)HASHIMOTO Kazuo
3)HITAKA Atsuo

(57) Abstract :
The present invention relates to a continuous manufacturing method for electrode material for lithium secondary batteries said continuous manufacturing method having a step wherein a mixture is obtained by dispersing a transition metal compound in an aqueous solution medium of a lithium compound and a step wherein the mixture is inserted into a rotating cylinder dried and fired. The continuous manufacturing method is characterised by the mixture being stirred by a stirring blade provided inside the rotating cylinder.

No. of Pages : 21 No. of Claims : 10

(12) PATENT APPLICATION PUBLICATION
(19) INDIA
(22) Date of filing of Application :07/06/2013
(21) Application No.2500/CHE/2013 A
(43) Publication Date : 05/09/2014

(54) Title of the invention : A CAMERA

(51) International classification :G03B
(31) Priority Document No :201210248743.1
(32) Priority Date :18/07/2012
(33) Name of priority country :China
(86) International Application No :NA
Filing Date :NA
(87) International Publication No : NA
(61) Patent of Addition to Application Number :NA
Filing Date :NA
(62) Divisional to Application Number :NA
Filing Date :NA

(71)**Name of Applicant :**
1)PELCO, INC.
Address of Applicant :3500 PELCO WAY, CLOVIS, CALIFORNIA 93619 U.S.A.
(72)**Name of Inventor :**
1)HUANG, ZESEN
2)GENG, JUNWEI

(57) Abstract :
The invention discloses a camera comprising a housing and a camera lens disposed at an end of the housing, characterized in that a box camera mounting part is provided on the housing of the camera to mount the camera in box camera configuration, and a dome camera mounting part is provided at an end where a camera lens is disposed to mount the camera in dome camera configuration. According to the invention, providing the box and dome camera mounting parts on the housing of the camera enables the camera of the invention to be mounted in box and dome camera configurations and allows the customer to delay the decision of choosing which configuration, thereby improving the flexibility of engineering design and installation. Furthermore, as the camera is provided in box and dome camera configurations, it is possible to only purchase and stock one configuration of cameras, which simplifies management of the stocked parts and thus reduces costs.

No. of Pages : 23 No. of Claims : 18

(12) PATENT APPLICATION PUBLICATION
(19) INDIA
(22) Date of filing of Application :28/05/2013
(21) Application No.4136/CHENP/2013 A
(43) Publication Date : 05/09/2014

(54) Title of the invention : METHODS OF TREATMENT USING LIPID COMPOUNDS

(51) International classification :A61K31/19
(31) Priority Document No :61/410445
(32) Priority Date :05/11/2010
(33) Name of priority country :U.S.A.
(86) International Application No :PCT/IB2011/002925
Filing Date :03/11/2011
(87) International Publication No :WO 2012/059818
(61) Patent of Addition to Application Number :NA
Filing Date :NA
(62) Divisional to Application Number :NA
Filing Date :NA

(71)**Name of Applicant :**
1)PRONOVA BIOPHARMA NORGE AS
Address of Applicant :P.O. Box 420 N 1327 Lysaker Norway
(72)**Name of Inventor :**
1)HOVLAND Ragnar
2)SKJ†RET Tore
3)FRASER David A.

(57) Abstract :
Methods are disclosed to treat or prevent at least one disease or condition in a subject in need thereof comprising administering a compound of Formula (I): (I) or a pharmaceutically acceptable salt or ester thereof wherein R and R are independently chosen from a hydrogen atom or linear branched and/or cyclic C C alkyl groups with the proviso that R and R are not both hydrogen or a pharmaceutically acceptable salt or ester thereof. Such diseases or conditions may relate to coronary heart disease (CHD) for example atherosclerosis; metabolic syndrome/insulin resistance; and/or a dyslipidemic condition such as hypertriglyceridemia (HTG) elevated LDL cholesterol elevated total cholesterol elevated Apo B and low HDL cholesterol. The present disclosure further provides for a method of reducing atherosclerosis development. Pharmaceutical compositions comprising a compound of Formula (I) are also disclosed.

No. of Pages : 26 No. of Claims : 40

(12) PATENT APPLICATION PUBLICATION
(19) INDIA
(22) Date of filing of Application :29/05/2013
(21) Application No.4137/CHENP/2013 A
(43) Publication Date : 05/09/2014

(54) Title of the invention : POST MIX BEVERAGE SYSTEM

(51) International classification :B65D81/32
(31) Priority Document No :12/982374
(32) Priority Date :30/12/2010
(33) Name of priority country :U.S.A.
(86) International Application No :PCT/US2011/067801
Filing Date :29/12/2011
(87) International Publication No :WO 2012/102814
(61) Patent of Addition to Application Number :NA
Filing Date :NA
(62) Divisional to Application Number :NA
Filing Date :NA

(71)**Name of Applicant :**
1)PEPSICO INC.
Address of Applicant :700 Anderson Hill Road Purchase NY 10577 U.S.A.
(72)**Name of Inventor :**
1)MARINA Carlos Hernan
2)MAQUITA NAGANO Jorge Manuel
3)ARIAS Ricardo
4)CLOQUELL GONZALEZ Miriam
5)LITE FRANCISCO Marc
6)PINYOL ESCARDO Anton
7)ENGA Agnete
8)FAIVRE DARCIER Vincent
9)CONNELLY Tim
10)CEDAR Jonathan
11)FORT Tucker

(57) Abstract :
A beverage dispensing system (100) comprises a container (110) an attachment mechanism (120) and a cartridge (150). The container may hold a mixing solution or liquid such as water to be mixed with the contents of the cartridge. The attachment mechanism is generally located within the container. The attachment mechanism may comprise an engagement assembly a piercing portion (124) and a valve assembly (126). The engagement assembly may generally receive the cartridge within the attachment mechanism. The piercing portion may generally pierce the cartridge thereby releasing the contents of the cartridge into the container. The valve assembly may generally open upon engagement of the cartridge with the attachment mechanism. The cartridge generally engages with the attachment mechanism to open the cartridge to be dispensed into the container thereby combining the contents of the cartridge with the liquid within the container to create a drinkable beverage.

No. of Pages : 92 No. of Claims : 63

(12) PATENT APPLICATION PUBLICATION
(19) INDIA
(22) Date of filing of Application :07/05/2013
(21) Application No.3584/CHENP/2013 A
(43) Publication Date : 05/09/2014

(54) Title of the invention : APPLICATION SPECIFIC RESOURCE MANAGEMENT

(51) International classification :G06F9/50,H04L12/56
(31) Priority Document No :12/912409
(32) Priority Date :26/10/2010
(33) Name of priority country :U.S.A.
(86) International Application No :PCT/US2011/057543
Filing Date :24/10/2011
(87) International Publication No :WO 2012/058170
(61) Patent of Addition to Application Number :NA
Filing Date :NA
(62) Divisional to Application Number :NA
Filing Date :NA

(71)**Name of Applicant :**
1)QUALCOMM INCORPORATED
Address of Applicant :Attn: International IP Administration 5775 Morehouse Drive San Diego California 92121 U.S.A.
(72)**Name of Inventor :**
1)RABII Khosro M.

(57) Abstract :
Present embodiments relate to resource management. More particularly these embodiments relate to a system and method for adaptively monitoring a plurality of applications making use of a finite number of resources. The embodiments permit application developers to specify preferred operation guidelines without detailed knowledge of the requirements of the system designer or user.

No. of Pages : 27 No. of Claims : 20

(12) PATENT APPLICATION PUBLICATION
(19) INDIA
(22) Date of filing of Application :07/05/2013
(21) Application No.3585/CHENP/2013 A
(43) Publication Date : 05/09/2014

(54) Title of the invention : FILTRATION UNIT AND SYSTEM

(51) International classification :B01D33/21
(31) Priority Document No :61/390734
(32) Priority Date :07/10/2010
(33) Name of priority country :U.S.A.
(86) International Application No :PCT/IL2011/000782
Filing Date :06/10/2011
(87) International Publication No :WO 2012/046235
(61) Patent of Addition to Application Number :NA
Filing Date :NA
(62) Divisional to Application Number :NA
Filing Date :NA

(71)**Name of Applicant :**
1)AMIAD WATER SYSTEMS LTD.
Address of Applicant :Kibbutz Amiad 12335 D.N. Upper Galil 1 Israel
(72)**Name of Inventor :**
1)OLENBERG Marina
2)ZUR Boaz
3)TAL Ron
4)ESHEL Gonen

(57) Abstract :
A filtration cassette having a rigid body configured for externally supporting a filtration media disposed thereover and having at least one filtering surface configured with a flow path facilitating filtered fluid flow from a space extending between the filtration media and the filtering surface and extending towards an outlet terminal. There is also provided a filtration segment comprising such a filtration cassette and where the filtration media is a filtration thread tensionally coiled over the filtration cassette at a multi layered and tight configuration. A plurality of such filtration segments are configured into a disk type assembly forming a filtration unit for a filtering system.

No. of Pages : 35 No. of Claims : 22

(12) PATENT APPLICATION PUBLICATION
(21) Application No.3586/CHENP/2013 A
(19) INDIA
(22) Date of filing of Application :07/05/2013
(43) Publication Date : 05/09/2014

(54) Title of the invention : COMMUNICATION SYSTEM FOR PROCESS FIELD DEVICE

(51) International classification :H04Q9/00
(31) Priority Document No :12/955185
(32) Priority Date :29/11/2010
(33) Name of priority country :U.S.A.
(86) International Application No :PCT/US2011/061136
Filing Date :17/11/2011
(87) International Publication No :WO 2012/074764
(61) Patent of Addition to Application Number :NA
Filing Date :NA
(62) Divisional to Application Number :NA
Filing Date :NA

(71)**Name of Applicant :**
1)ROSEMOUNT INC.
Address of Applicant :12001 Technology Drive Eden Prairie 55344 U.S.A.
(72)**Name of Inventor :**
1)KOROLEV Eugene
2)SCHULTE John P.

(57) Abstract :
A field device (102) for use in an industrial process includes a process interface element (108) configured to measure or control a process variable. Communication circuitry (156) is configured to communicate with another location. A communication system is configured to provide communications between at least two components in the field device (102). A signal inverter (220) couples an inverted signal from the communication system (192) to other circuitry to thereby reduce interference received by the other circuitry.

No. of Pages : 16 No. of Claims : 18

(12) PATENT APPLICATION PUBLICATION
(19) INDIA
(22) Date of filing of Application :28/05/2013
(21) Application No.4114/CHENP/2013 A
(43) Publication Date : 05/09/2014

(54) Title of the invention : EFFERVESCENT COMPOSITION FOR IMPROVED CARBON DIOXIDE GENERATION IN INSECT MONITOR DEVICES

(51) International classification :C01B31/20
(31) Priority Document No :61/458935
(32) Priority Date :03/12/2010
(33) Name of priority country :U.S.A.
(86) International Application No :PCT/US2011/054848
Filing Date :05/10/2011
(87) International Publication No :WO 2012/074603
(61) Patent of Addition to Application Number :NA
Filing Date :NA
(62) Divisional to Application Number :NA
Filing Date :NA

(71)**Name of Applicant :**
1)FMC CORPORATION
Address of Applicant :1735 Market Street Philadelphia PA 19103 U.S.A.
(72)**Name of Inventor :**
1)BLACK Bruce C.
2)SHETH Shreya
3)VARANYAK Linda

(57) Abstract :
The present invention relates to a chemical composition and method of generating carbon dioxide for use with an insect monitor and/or capture device comprising: i) an effervescent agent; ii) a solid acid; iii) a deliquescent agent; and optionally iv) an anti clumping agent.

No. of Pages : 19 No. of Claims : 18

(12) PATENT APPLICATION PUBLICATION
(19) INDIA
(22) Date of filing of Application :04/06/2013
(21) Application No.4300/CHENP/2013 A
(43) Publication Date : 05/09/2014

(54) Title of the invention : LAMINATED GLASS PANEL FOR HEAD UP DISPLAY SYSTEM

(51) International classification :C03C27/12,B32B17/10,C08K5/00
(31) Priority Document No :1060081
(32) Priority Date :03/12/2010
(33) Name of priority country :France
(86) International Application No :PCT/FR2011/052820
Filing Date :30/11/2011
(87) International Publication No :WO 2012/072950
(61) Patent of Addition to Application Number :NA
Filing Date :NA
(62) Divisional to Application Number :NA
Filing Date :NA

(71)**Name of Applicant :**
1)SAINT GOBAIN GLASS FRANCE
Address of Applicant :18 Avenue dAlsace F 92400 Courbevoie France
(72)**Name of Inventor :**
1)SABLAYROLLES Jean
2)DEKONINCK Alexandra
3)LABROT Michael

(57) Abstract :
The present invention relates to a laminated glass panel for displaying information and used as a motor vehicle windshield or building window said glass panel including an assembly of at least two transparent sheets made of inorganic glass or a strong organic material said sheets being connected together by an insert made of thermoformable material or by multilayer sheets incorporating such an insert wherein said glass panel is characterized in that a hydroxy terephthalate phosphor material combined with an antioxidant additive is integrated into said insert thus enabling said display. The invention also relates to a device for displaying an image on a transparent glass panel including the above laminated glass panel and a laser source for generating concentrated UV radiation the radiation of which is between 350 and 410 nm. The UV radiation is directed toward the area(s) of the glass panel that include the terephthalate phosphor layer.

No. of Pages : 27 No. of Claims : 14

(12) PATENT APPLICATION PUBLICATION
(21) Application No.2492/CHE/2013 A
(19) INDIA
(22) Date of filing of Application :06/06/2013
(43) Publication Date : 05/09/2014

(54) Title of the invention : SENSOR FOR DETECTION OF A TARGET OF INTEREST

(51) International classification :G01J
(31) Priority Document No :61/656,354
(32) Priority Date :06/06/2012
(33) Name of priority country :U.S.A.
(86) International Application No :NA
Filing Date :NA
(87) International Publication No : NA
(61) Patent of Addition to Application Number :NA
Filing Date :NA
(62) Divisional to Application Number :NA
Filing Date :NA

(71)**Name of Applicant :**
1)NATIONAL TAIWAN UNIVERSITY
Address of Applicant :#1, SEC. 4, ROOSEVELT ROAD, TAIPEI 10617 Taiwan
(72)**Name of Inventor :**
1)SHIMING LIN
2)SI-CHEN LEE
3)LUAN-YIN CHANG

(57) Abstract :
Embodiments of the present disclosure set forth a sensor for detecting a target of interest. One exemplary sensor may comprise a container; a probe disposed in the container and configured to bind to a target of interest; a circulation means configured to circulate substances in the container; a light source; a light receiver; a light selecting unit for allowing light of a predetermined wavelength be received by the light receiver; and a detector configured to generate an electrical signal. The magnitude of the electrical signal reflects the amount of light that is received by the light receiver. The container is located between the light source and the light receiver. Moreover, the container is configured such that the probe and the path of the light emitted by the light source are in different regions inside the container.

No. of Pages : 45 No. of Claims : 25

(12) PATENT APPLICATION PUBLICATION
(19) INDIA
(22) Date of filing of Application :06/05/2013

(21) Application No.3547/CHENP/2013 A
(43) Publication Date : 05/09/2014

(54) Title of the invention : DEFIBRILLATOR WITH DYNAMIC ONGOING CPR PROTOCOL

(51) International classification :A61N1/39
(31) Priority Document No :61/409808
(32) Priority Date :03/11/2010
(33) Name of priority country :U.S.A.
(86) International Application No :PCT/IB2011/054772
Filing Date :26/10/2011
(87) International Publication No :WO 2012/059846
(61) Patent of Addition to Application Number :NA
Filing Date :NA
(62) Divisional to Application Number :NA
Filing Date :NA

(71)**Name of Applicant :**
1)KONINKLIJKE PHILIPS ELECTRONICS N.V.
Address of Applicant :High Tech Campus 5 NL 5656 AE Eindhoven Netherlands
(72)**Name of Inventor :**
1)JORGENSON Dawn
2)CARY Christian
3)FROMAN Jamie
4)RUCKER Kenneth

(57) Abstract :
An automated external defibrillator (AED) (10) having a treatment decision processor (28) is described which follows a shock first or a CPR first rescue protocol after identification of a treatable arrhythmia depending upon an estimate of the probability of successful resuscitation made from an analysis of a patient parameter measured at the beginning of the rescue. The invention may also follow different CPR protocols depending on the estimate. The invention also may use the trend of the measured patient parameter to adjust the CPR protocol either during a CPR pause or after the initial CPR pause. The AED (10) thus enables an improved rescue protocol.

No. of Pages : 32 No. of Claims : 16

(12) PATENT APPLICATION PUBLICATION
(19) INDIA
(22) Date of filing of Application :06/05/2013
(21) Application No.3548/CHENP/2013 A
(43) Publication Date : 05/09/2014

(54) Title of the invention : VELOCITY DETERMINATION APPARATUS

(51) International classification :G01S17/58
(31) Priority Document No :10189859.1
(32) Priority Date :03/11/2010
(33) Name of priority country :EPO
(86) International Application No :PCT/IB2011/054849
Filing Date :01/11/2011
(87) International Publication No :WO 2012/059863
(61) Patent of Addition to Application Number :NA
Filing Date :NA
(62) Divisional to Application Number :NA
Filing Date :NA

(71)**Name of Applicant :**
1)KONINKLIJKE PHILIPS ELECTRONICS N.V.
Address of Applicant :High Tech Campus 5 NL 5656 AE Eindhoven Netherlands
2)PHILIPS INTELLECTUAL PROPERTY & STANDARDS GMBH
(72)**Name of Inventor :**
1)CARPAIJ Mark
2)PENTCHEV Atanas

(57) Abstract :
The invention relates to a velocity determination apparatus (1) for determining a velocity of an object(2). A Doppler frequency measuring unit is adapted to measure Doppler frequencies in at least three different frequency directions wherein a Doppler frequency calculation unit is adapted to calculate a Doppler frequency for a calculation frequency direction being similar to one of the at least three different frequency directions depending on the Doppler frequencies measured for at least two further frequency directions of the at least three different frequency directions. The velocity can then be determined depending on the calculated Doppler frequency and the measured Doppler frequencies. Since in the calculation frequency direction the measured Doppler frequency is not needed for determining the velocity a reliable velocity can be determined also in the calculation frequency direction even if the measurement of the Doppler frequency in this calculation frequency direction is disturbed.

No. of Pages : 35 No. of Claims : 15

(12) PATENT APPLICATION PUBLICATION
(19) INDIA
(22) Date of filing of Application :05/06/2013
(21) Application No.4339/CHENP/2013 A
(43) Publication Date : 05/09/2014

(54) Title of the invention : COLLAPSIBLE TOILET

(51) International classification :A47K11/04
(31) Priority Document No :2011142570
(32) Priority Date :28/06/2011
(33) Name of priority country :Japan
(86) International Application No :PCT/JP2012/060966
Filing Date :24/04/2012
(87) International Publication No :WO 2013/001899
(61) Patent of Addition to Application Number :NA
Filing Date :NA
(62) Divisional to Application Number :NA
Filing Date :NA

(71)**Name of Applicant :**
1)ITO Hiroshi
Address of Applicant :201 Masutoraifu nishishimbashi 6 10 Nishishimbashi 3 chome Minato ku Tokyo 1050003 Japan
(72)**Name of Inventor :**
1)ITO Hiroshi

(57) Abstract :
[Problem] To provide a collapsible toilet for which waste of materials used has been minimized which has a simple structure and a prescribed strength and which can be used repeatedly. [Solution] A collapsible toilet (T) having a rectangular board that is demarcated into a five row — three column rectangular shape by foldable division lines or perforation lines and which forms a rectangular parallelepiped when assembled is provided with: a first row (1) that forms a first side surface; a second row (2) that forms the top surface; a third row (3) that forms a third side surface; a fourth row (4) that forms at least a second side surface a fourth side surface and the bottom surface; and a fifth row (5) that forms a first top surface reinforcing part a second top surface reinforcing part and the first side surface.

No. of Pages : 56 No. of Claims : 6

(12) PATENT APPLICATION PUBLICATION
(19) INDIA
(22) Date of filing of Application :02/05/2013
(21) Application No.3486/CHENP/2013 A
(43) Publication Date : 05/09/2014

(54) Title of the invention : CONVEYOR FOR CLAMPING SOFT OBJECTS

(51) International classification :B65H5/02
(31) Priority Document No :201110283023.4
(32) Priority Date :22/09/2011
(33) Name of priority country :China
(86) International Application No :PCT/CN2012/073768
Filing Date :11/04/2012
(87) International Publication No :WO 2013/040888
(61) Patent of Addition to Application Number :NA
Filing Date :NA
(62) Divisional to Application Number :NA
Filing Date :NA

(71)**Name of Applicant :**
1)ZHONGSHAN NCA CO. LTD
Address of Applicant :No.13,Shabian Road Torch Development Zone Zhongshan Guangdong 528400 China
(72)**Name of Inventor :**
1)XU Changheng

(57) Abstract :
A conveyor for clamping soft objects comprising a lower conveyor belt (1) and an upper conveyor belt (2) with a concave convex structure (3) for clamping and transporting soft objects provided on the surface of both the lower conveyor belt (1) and the upper conveyor belt (2). The concave convex structure (3) comprises first convex strips (31) arranged successively on the surface of the lower conveyor belt (1) and second convex strips (32) arranged successively on the surface of the upper conveyor belt (2) with the first convex strips (31) and the second convex strips (32) being staggered where the lower conveyor belt (1) and the upper conveyor belt (2) are in contact. The technical solution has a simple structure and good transportation effects.

No. of Pages : 13 No. of Claims : 6

(12) PATENT APPLICATION PUBLICATION
(21) Application No.3487/CHENP/2013 A
(19) INDIA
(22) Date of filing of Application :02/05/2013
(43) Publication Date : 05/09/2014

(54) Title of the invention : INFORMATION DISPLAY METHOD AND APPARATUS OF MOBILE TERMINAL

(51) International classification :H04B1/40
(31) Priority Document No :1020100114907
(32) Priority Date :18/11/2010
(33) Name of priority country :Republic of Korea
(86) International Application No :PCT/KR2011/006217
Filing Date :23/08/2011
(87) International Publication No :WO 2012/067339
(61) Patent of Addition to Application Number :NA
Filing Date :NA
(62) Divisional to Application Number :NA
Filing Date :NA

(71)**Name of Applicant :**
1)SAMSUNG ELECTRONICS CO. LTD.
Address of Applicant :129 Samsung ro Yeongtong gu Suwon si Gyeonggi do 443 742 Republic of Korea
(72)**Name of Inventor :**
1)LEE Seung Myung

(57) Abstract :
A method and apparatus for displaying a list of information items selected depending on whether each information item contains certain information is provided. An information display method of the present invention includes displaying a list having at least one information item; classifying when a user command is input the at least one information item into shown information item and hidden information item according to a display rule; and modifying the list to show only the shown information items.

No. of Pages : 29 No. of Claims : 15

(12) PATENT APPLICATION PUBLICATION
(21) Application No.3570/CHENP/2013 A
(19) INDIA
(22) Date of filing of Application :07/05/2013
(43) Publication Date : 05/09/2014

(54) Title of the invention : DIELECTRIC BARRIER DISCHARGE LAMP DEVICE AND OPTICAL FLUID TREATMENT DEVICE PROVIDED WITH THE DIELECTRIC BARRIER DISCHARGE LAMP DEVICE

(51) International classification :H01J65/04
(31) Priority Document No :10191406.7
(32) Priority Date :16/11/2010
(33) Name of priority country :EPO
(86) International Application No :PCT/IB2011/054747
Filing Date :25/10/2011
(87) International Publication No :WO 2012/066440
(61) Patent of Addition to Application Number :NA
Filing Date :NA
(62) Divisional to Application Number :NA
Filing Date :NA

(71)**Name of Applicant :**
1)KONINKLIJKE PHILIPS ELECTRONICS N.V.
Address of Applicant :High Tech Campus 5 NL 5656 AE Eindhoven Netherlands
(72)**Name of Inventor :**
1)MASTENBROEK Olaf
2)BAK Robert
3)GEBOERS Jacques Maria Jozef
4)VAN DER MEER Michiel

(57) Abstract :
A dielectric barrier discharge DBD lamp device comprises a toroid shaped discharge chamber (10) having a discharge chamber wall (12). The discharge chamber wall comprises a tubular inner wall section (14) a tubular outer wall section (16) and two ring shaped end wall sections (18 20). Each of the end wall sections extend between an end of the outer wall section and an end of the inner wall section. A high voltage electrode (22) is provided at an outer surface of the outer wall section of the discharge chamber wall. A low voltage electrode comprises an electrically conducting fluid surrounded by the inner wall section of the discharge chamber wall. The DBD lamp device may be part of an optical fluid treatment device.

No. of Pages : 32 No. of Claims : 21

(12) PATENT APPLICATION PUBLICATION
(19) INDIA
(22) Date of filing of Application :07/05/2013
(21) Application No.3571/CHENP/2013 A
(43) Publication Date : 05/09/2014

(54) Title of the invention : METHOD FOR INSTALLING A FEMTOCELL ACCESS POINT

(51) International classification :H04L
(31) Priority Document No :10306251.9
(32) Priority Date :15/11/2010
(33) Name of priority country :EPO
(86) International Application No :PCT/IB2011/054928
Filing Date :04/11/2011
(87) International Publication No :WO 2012/066448
(61) Patent of Addition to Application Number :NA
Filing Date :NA
(62) Divisional to Application Number :NA
Filing Date :NA

(71)**Name of Applicant :**
1)KONINKLIJKE PHILIPS ELECTRONICS N.V.
Address of Applicant :High Tech Campus 5 NL 5656 AE Eindhoven Netherlands
2)SHARP KABUSHIKI KAISHA
(72)**Name of Inventor :**
1)DAVIES Robert
2)MOULSLEY Timothy
3)CHIAU Choo

(57) Abstract :
A method installing a femtocell device in a radiotelecommunications network wherein the femtocell device receives from a mobile telecommunication device a set of parameters for connecting the femtocell device to a network access device that provides an access to an Internet Protocol network and connects to a management unit of the radiotelecommunications network through the Internet Protocol network access in order to be integrated to the radiotelecommunications network under control of the said first management unit.

No. of Pages : 27 No. of Claims : 15

(12) PATENT APPLICATION PUBLICATION
(21) Application No.439/CHE/2012 A
(19) INDIA
(22) Date of filing of Application :06/02/2012
(43) Publication Date : 05/09/2014

(54) Title of the invention : NATURAL MOSQUITO REPELLENT AND PROCESS TO PREPARE THE SAME

(51) International classification :A01N
(31) Priority Document No :NA
(32) Priority Date :NA
(33) Name of priority country :NA
(86) International Application No :NA
Filing Date :NA
(87) International Publication No : NA
(61) Patent of Addition to Application Number :NA
Filing Date :NA
(62) Divisional to Application Number :NA
Filing Date :NA

(71)**Name of Applicant :**
1)DAYANANDA PATWARDHAN
Address of Applicant :GUDLY HOUSE, POST MUNDAJE - 574 228, BELTHANGADY TALUK, DAKSHINA KANNADA DISTRICT India
(72)**Name of Inventor :**
1)DAYANANDA PATWARDHAN

(57) Abstract :
The invention is a natural mosquito repellent comprising of arecanut, cowdung and methi. All the ingredients of this mosquito repellent are nature's products and have no harmful effect on human or on the environment. The process of preparation of the same is also described in the invention.

No. of Pages : 9 No. of Claims : 3

(12) PATENT APPLICATION PUBLICATION
(19) INDIA
(22) Date of filing of Application :05/03/2013
(21) Application No.1787/CHENP/2013 A
(43) Publication Date : 05/09/2014

(54) Title of the invention : A SILICONE EMULSION

(51) International classification :A61K8/06,A61K8/891,A61Q5/02
(31) Priority Document No :2010202207
(32) Priority Date :09/09/2010
(33) Name of priority country :Japan
(86) International Application No :PCT/EP2011/064632
Filing Date :25/08/2011
(87) International Publication No :WO 2012/031903
(61) Patent of Addition to Application Number :NA
Filing Date :NA
(62) Divisional to Application Number :NA
Filing Date :NA

(71)**Name of Applicant :**
1)WACKER CHEMIE AG
Address of Applicant :Hanns Seidel Platz 4 81737 M¼nchen Germany
(72)**Name of Inventor :**
1)IGARASHI Kenji
2)ARAKI Shinichi

(57) Abstract :
A stable aqueous emulsion obtained by emulsifying polyorganosiloxane having a high viscosity with a nonionic surfactant and used for a material for hair cosmetics is provided. An aqueous emulsion composition includes (A) 1 to 90% by weight of a polyorganosiloxane having a viscosity of 1 x 10 to 5.0 x 10 mPa s at 25°C (B) 0.1 to 20% by weight of a surfactant which is polyoxyethylene hydrogenated castor oil and/or polyoxyethylene castor oil and has an addition molar number of ethylene oxide of 150 to 300 and (C) 5 to 98.9% by weight of water.

No. of Pages : 23 No. of Claims : 9

(12) PATENT APPLICATION PUBLICATION
(19) INDIA
(22) Date of filing of Application :12/03/2013
(21) Application No.1967/CHENP/2013 A
(43) Publication Date : 05/09/2014

(54) Title of the invention : WATER PURIFYING CARTRIDGE

(51) International classification :C02F1/28,B01D24/02,C02F1/44
(31) Priority Document No :2010180950
(32) Priority Date :12/08/2010
(33) Name of priority country :Japan
(86) International Application No :PCT/JP2011/068346
Filing Date :11/08/2011
(87) International Publication No:WO 2012/020822
(61) Patent of Addition to Application Number :NA
Filing Date :NA
(62) Divisional to Application Number :NA
Filing Date :NA

(71)**Name of Applicant :**
1)MITSUBISHI RAYON CLEANSUI COMPANY LIMITED
Address of Applicant :14 1 Nihonbashi Koamicho Chuo ku Tokyo 1030016 Japan
(72)**Name of Inventor :**
1)TAKEDA Hatsumi
2)HATAKEYAMA Atsushi

(57) Abstract :
The purpose of the present invention is to provide a water purifying cartridge which can be produced through fewer steps and is equipped with a raw water inlet having excellent durability and composed of a mesh member. The present invention provides a water purifying cartridge which is to be arranged between a raw water storage section and a purified water storage section in a water purifier and is equipped with a raw water inlet through which raw water placed in the raw water storage section is to be taken into the inside of the water purifying cartridge wherein the raw water taken through the raw water inlet is purified using a filtering material. The water purifying cartridge is characterized in that a planar section is arranged above a water purifying section in which the filtering material is arranged and the raw water inlet is formed on the planar section using a mesh member having a planar shape.

No. of Pages : 37 No. of Claims : 15

(12) PATENT APPLICATION PUBLICATION
(21) Application No.4278/CHENP/2013 A
(19) INDIA
(22) Date of filing of Application :04/06/2013
(43) Publication Date : 05/09/2014

(54) Title of the invention : COMMUNICATION SERVICE PROVIDING SYSTEM METHOD OF PROVIDING COMMUNICATION SERVICE AND DATA CENTER MANAGEMENT SYSTEM

(51) International classification :G06F13/00,G06F12/00
(31) Priority Document No :2010273746
(32) Priority Date :08/12/2010
(33) Name of priority country :Japan
(86) International Application No :PCT/JP2011/006702
Filing Date :30/11/2011
(87) International Publication No :WO 2012/077303
(61) Patent of Addition to Application Number :NA
Filing Date :NA
(62) Divisional to Application Number :NA
Filing Date :NA

(71)**Name of Applicant :**
1)NEC Corporation
Address of Applicant :7 1 Shiba 5 chome Minato ku Tokyo 1088001 Japan
(72)**Name of Inventor :**
1)OHNISHI Masato

(57) Abstract :
The present invention provides a communication service providing system capable of providing for a user the same level of service regardless of the location where a user terminal exists and providing a service via a network appropriate for the service. A location information collecting means (71) collects location information of the terminal of a user receiving a service from any data center. A data transfer instructing means (72) determines the data center which is closest to the location indicated by the location information and if the data center is different from the data center currently providing a service to the user instructs the data center currently providing a service to the user to transfer the user data and the user area of the user to the data center which is closest to the location indicated by the location information.

No. of Pages : 55 No. of Claims : 7

(12) PATENT APPLICATION PUBLICATION
(19) INDIA
(22) Date of filing of Application :12/06/2013
(21) Application No.4481/CHENP/2013 A
(43) Publication Date : 05/09/2014

(54) Title of the invention : COMPUTER READABLE STORAGE MEDIUMS FOR ENCRYPTING AND DECRYPTING A VIRTUAL DISC

(51) International classification :G06F21/80,G06F9/455
(31) Priority Document No :10194400.7
(32) Priority Date :09/12/2010
(33) Name of priority country :EPO
(86) International Application No :PCT/EP2011/069323
Filing Date :03/11/2011
(87) International Publication No :WO 2012/076266
(61) Patent of Addition to Application Number :NA
Filing Date :NA
(62) Divisional to Application Number :NA
Filing Date :NA

(71)**Name of Applicant :**
1)INTERNATIONAL BUSINESS MACHINES CORPORATION
Address of Applicant :New Orchard Road New York Armonk N.Y. New York 10504 U.S.A.
(72)**Name of Inventor :**
1)FONTIGNIE Jacques
2)MARINELLI Claudio
3)VUILLEUMIER STUECKELBERG Marc
4)PICHETTI Luigi

(57) Abstract :
A computer readable storage medium (916) containing machine executable instructions that when executed by a processor cause the processor to encrypt a virtual disc; wherein the virtual disc comprises a virtual disc image; and wherein execution of the machine executable instructions cause the processor to: receive (600) the virtual disc; increase (602) the size of the virtual disc; write (604) a decryption master boot record and a decryption program to the virtual disc; encrypt (606) at least a portion of the virtual disc image wherein the decryption program comprises decryption machine executable instructions for decrypting the at least partially encrypted virtual disc image in accordance with a cryptographic key (944).

No. of Pages : 41 No. of Claims : 15

(12) PATENT APPLICATION PUBLICATION
(19) INDIA
(22) Date of filing of Application :25/03/2013
(21) Application No.2353/CHENP/2013 A
(43) Publication Date : 05/09/2014

(54) Title of the invention : ELECTRICAL ARRANGEMENT OF HYBRID IGNITION DEVICE

(51) International classification :F02P3/01,F02P9/00,F02P23/04
(31) Priority Document No :61/378673
(32) Priority Date :31/08/2010
(33) Name of priority country :U.S.A.
(86) International Application No :PCT/US2011/049924
Filing Date :31/08/2011
(87) International Publication No :WO 2012/030934
(61) Patent of Addition to Application Number :NA
Filing Date :NA
(62) Divisional to Application Number :NA
Filing Date :NA

(71)**Name of Applicant :**
1)FEDERAL MOGUL IGNITION COMPANY
Address of Applicant :26555 Northwestern Highway Southfield MI 48033 U.S.A.
(72)**Name of Inventor :**
1)BURROWS John Anthony
2)LYKOWSKI James D.

(57) Abstract :
A corona ignition system 20 includes a corona drive circuit 26 and an auxiliary energy circuit 28. The energy circuit 28 stores energy during a standard corona ignition cycle. When arc discharge occurs or corona discharge switches to an arc discharge the energy circuit 28 discharges the stored energy to the electrode 30 to intentionally maintain a robust arc discharge 29 and thus provide reliable ignition. The stored energy is transmitted to the electrode 30 over a predetermined period of time. The arc discharge is detected and an arc control signal 60 is transmitted to the energy circuit 28 triggering discharge of the stored energy to the electrode 30. The stored energy can be transmitted to the electrode 30 along a variety of different paths. The voltage of the stored energy is typically increased by an energy transformer 70 before being transmitted to the electrode 30.

No. of Pages : 20 No. of Claims : 20

(12) PATENT APPLICATION PUBLICATION
(21) Application No.2633/CHE/2013 A
(19) INDIA
(22) Date of filing of Application :17/06/2013
(43) Publication Date : 05/09/2014

(54) Title of the invention : FUEL INJECTION CONTROLLER

(51) International classification	:F02D41/12	(71)**Name of Applicant :**
(31) Priority Document No	:2012-137808	**1)DENSO CORPORATION**
(32) Priority Date	:19/06/2012	Address of Applicant :1-1, SHOWA-CHO, KARIYA-CITY, AICHI-PREF. 448-8661 Japan
(33) Name of priority country	:Japan	(72)**Name of Inventor :**
(86) International Application No	:NA	**1)KATSURA, RYOU**
Filing Date	:NA	
(87) International Publication No	: NA	
(61) Patent of Addition to Application Number	:NA	
Filing Date	:NA	
(62) Divisional to Application Number	:NA	
Filing Date	:NA	

(57) Abstract :
A fuel injection controller samples and AD-converts a driving current of a feed pump at a specified time interval, and then filtrates an AD-converted value by a band-pass filter (S400, S402). A rising start angle TG is determined at a time point that the driving current after being filtrated becomes a specified range where a rise of the driving current is started (S404). A rising complete angle TR is determined at a time point that the driving current becomes a specified range where a rise of the driving current is completed (S406). Since a pumping quantity is determined by a time period from the rising start angle TG to the rising complete TR, the fuel injection controller computes an estimated pumping quantity of the high-pressure pump based on the rising start angle TG and the rising complete angle TR. When the estimated pumping quantity is at a super-pumping state (S410: Yes), and when the super-pumping state continuously is caused for n times (S412: Yes), a power supply to a feed pump is stopped to stop the feed pump (S414).

No. of Pages : 23 No. of Claims : 6

(12) PATENT APPLICATION PUBLICATION
(19) INDIA
(22) Date of filing of Application :15/01/2013
(21) Application No.339/CHENP/2013 A
(43) Publication Date : 05/09/2014

(54) Title of the invention : SURGICAL SYSTEMS FOR IMPLANTING EXPANDABLE IMPLANTS

(51) International classification :A61F2/44,A61F2/46
(31) Priority Document No :61/364412
(32) Priority Date :15/07/2010
(33) Name of priority country :U.S.A.
(86) International Application No :PCT/IB2011/053143
Filing Date :14/07/2011
(87) International Publication No :WO 2012/007918
(61) Patent of Addition to Application Number :NA
Filing Date :NA
(62) Divisional to Application Number :NA
Filing Date :NA

(71)**Name of Applicant :**
1)NLT SPINE LTD.
Address of Applicant :P.O. Box 2289 Indus. Zone 44641 Kfar Saba Israel
(72)**Name of Inventor :**
1)SIEGAL Tzony
2)LOEBL Oded
3)TOUBIA Didier

(57) Abstract :
Deflectable implants systems and methods for implanting deflectable implants are disclosed. The deflectable implant (100) includes at least one sequence of segments (102) the sequence includes at least two segments (102) the segments (102) being interconnected at effective hinges (107) the sequence assuming a straightened or low curvature insertion state for insertion into the body the sequence being deflectable to a fully deflected state defined by abutment of abutment features of adjacent of the segments (102). The deflectable implant (100) includes further a linkage mechanically linked to at least part of at least one of the sequences of segments (102) for deflecting the at least one sequence of segments (102) from the insertion state towards the fully deflected state wherein the at least one sequence is at least part of a loop structure assuming a low profile folded state with the at least one sequence towards the fully deflected state generates an open state of the loop structure and wherein the loop defines an enclosed volume (106).

No. of Pages : 53 No. of Claims : 35

(12) PATENT APPLICATION PUBLICATION
(21) Application No.4581/CHENP/2013 A
(19) INDIA
(22) Date of filing of Application :14/06/2013
(43) Publication Date : 05/09/2014

(54) Title of the invention : HIGH TEMPERATURE STABLE THERMALLY CONDUCTIVE MATERIALS

(51) International classification :C08L83/04
(31) Priority Document No :61/436214
(32) Priority Date :26/01/2011
(33) Name of priority country :U.S.A.
(86) International Application No :PCT/US2012/020699
Filing Date :10/01/2012
(87) International Publication No :WO 2012/102852
(61) Patent of Addition to Application Number :NA
Filing Date :NA
(62) Divisional to Application Number :NA
Filing Date :NA

(71)**Name of Applicant :**
1)DOW CORNING CORPORATION
Address of Applicant :2200 West Salzburg Road Midland MI 48686 0994 U.S.A.
(72)**Name of Inventor :**
1)BHAGWAGAR Dorab Edul
2)MESSING Kelly
3)WOOD Elizabeth

(57) Abstract :
Disclosed herein are compositions preparation methods and use of thermally conductive materials comprising silicone composition curable by hydrosilylation thermally conductive fillers and phthalocyanine. The novel composition retains its desirable pliability after cure even when kept at an elevated temperature for an extended period.

No. of Pages : 29 No. of Claims : 12

(12) PATENT APPLICATION PUBLICATION
(19) INDIA
(22) Date of filing of Application :01/01/2013
(21) Application No.31/CHENP/2013 A
(43) Publication Date : 05/09/2014

(54) Title of the invention : COATED ABRASIVE ARTICLES

(51) International classification :B24D11/00,B24D18/00
(31) Priority Document No :61/361020
(32) Priority Date :02/07/2010
(33) Name of priority country :U.S.A.
(86) International Application No :PCT/US2011/041326
Filing Date :22/06/2011
(87) International Publication No :WO 2012/003116
(61) Patent of Addition to Application Number :NA
Filing Date :NA
(62) Divisional to Application Number :NA
Filing Date :NA

(71)**Name of Applicant :**
1)3M INNOVATIVE PROPERTIES COMPANY
Address of Applicant :3M Center Post Office Box 33427 Saint Paul Minnesota 55133 3427 U.S.A.
(72)**Name of Inventor :**
1)EILERS Deborah J.
2)JANSSEN Jeffrey R.
3)WALD Charles R.
4)LEE Christopher J.
5)SCHUKNECHT Schoen A.

(57) Abstract :
Provided are abrasive articles in which the make layer abrasive particle layer and size layer are coated onto a backing according to a pre determined coating pattern. All three components are generally in registration with each other thereby providing a pervasive uncoated area extending across the backing. Advantageously this configuration provides a coated abrasive that displays superior curl resistance compared with previously disclosed abrasive articles. Moreover this configuration resists loading resists de lamination has enhanced flexibility and decreases the quantity of raw materials required to achieve the same level of performance as conventional abrasive articles.

No. of Pages : 37 No. of Claims : 31

(12) PATENT APPLICATION PUBLICATION
(19) INDIA
(22) Date of filing of Application :16/01/2013
(21) Application No.358/CHENP/2013 A
(43) Publication Date : 05/09/2014

(54) Title of the invention : CONSTANT VELOCITY JOINT ASSEMBLY AND METHOD OF SECURING A SHAFT TO THE ASSEMBLY

(51) International classification :F16D3/84
(31) Priority Document No :12/804380
(32) Priority Date :19/07/2010
(33) Name of priority country :U.S.A.
(86) International Application No :PCT/US2011/001065
Filing Date :10/06/2011
(87) International Publication No :WO 2012/011935
(61) Patent of Addition to Application Number :NA
Filing Date :NA
(62) Divisional to Application Number :NA
Filing Date :NA

(71)**Name of Applicant :**
1)DANA AUTOMOTIVE SYSTEMS GROUP LLC
Address of Applicant :3939 Technology Drive PO Box 1000 Naumee OH 43537 U.S.A.
(72)**Name of Inventor :**
1)DINE Donald W.
2)YABLOCHNIKOV Boris A.

(57) Abstract :
A constant velocity joint assembly and a method of securing a shaft to the assembly are described. The assembly may have an outer race with a first portion having a plurality of grooves and a second portion that extends from the first portion and is substantially parallel to the shaft. The method of securing the shaft to the assembly includes the step of magnetically pulse welding the shaft to the outer race.

No. of Pages : 20 No. of Claims : 20

(12) PATENT APPLICATION PUBLICATION
(21) Application No.3582/CHENP/2013 A
(19) INDIA
(22) Date of filing of Application :07/05/2013
(43) Publication Date : 05/09/2014

(54) Title of the invention : PH MONITORING DEVICE AND METHOD

(51) International classification :G01N27/416
(31) Priority Document No :PCT/CN2010/078600
(32) Priority Date :10/11/2010
(33) Name of priority country :China
(86) International Application No :PCT/IB2011/055007
Filing Date :10/11/2011
(87) International Publication No :WO 2012/063214
(61) Patent of Addition to Application Number :NA
Filing Date :NA
(62) Divisional to Application Number :NA
Filing Date :NA

(71)**Name of Applicant :**
1)KONINKLIJKE PHILIPS ELECTRONICS N.V.
Address of Applicant :High Tech Campus 5 NL 5656 AE Eindhoven Netherlands
(72)**Name of Inventor :**
1)SHI Jun
2)WANG Weiran

(57) Abstract :
The invention proposes a pH monitoring device 10 comprising a chamber 107 for containing a solution; a polymer 105 being immersed in the solution wherein the physical state of the polymer is changeable in dependence on whether the pH of the solution exceeds a threshold value; and a detector 109 for detecting the change of the physical state of the polymer.

No. of Pages : 21 No. of Claims : 15

(12) PATENT APPLICATION PUBLICATION
(19) INDIA
(22) Date of filing of Application :12/06/2013
(21) Application No.4480/CHENP/2013 A
(43) Publication Date : 05/09/2014

(54) Title of the invention : SAFETY SWITCHING DEVICE FOR THE FAILSAFE SHUTDOWN OF AN ELECTRICAL CONSUMER

(51) International classification :G05B9/02
(31) Priority Document No :10 2010 054 386.1
(32) Priority Date :06/12/2010
(33) Name of priority country :Germany
(86) International Application No :PCT/EP2011/071688
Filing Date :05/12/2011
(87) International Publication No :WO 2012/076433
(61) Patent of Addition to Application Number :NA
Filing Date :NA
(62) Divisional to Application Number :NA
Filing Date :NA

(71)**Name of Applicant :**
1)PILZ GMBH & CO. KG
Address of Applicant :Felix Wankel Str. 2 73760 Ostfildern Germany
(72)**Name of Inventor :**
1)LE Kim
2)RICHTER Sebastian

(57) Abstract :
The invention relates to a safety switching device for the failsafe shutdown of an electrical consumer comprising at least one input circuit (54) for receiving an input signal (20 90) from a signalling device (18 46) which signals a safety relevant status and at least one output circuit (56) for outputting an output signal (48). The safety switching device further comprises at least one switching element (30) which is designed to interrupt a current supply path to the consumer. An evaluation and control unit (28) of the safety switching device is designed to actuate the at least one switching element depending on the input signal (20 90). The at least one input circuit (54) and the at least one output circuit (56) are joined at a device connection (26) so that said device connection (26) can be used either as an input for receiving the input signal (20 90) or as an output for outputting the output signal (48). The input circuit has a test switch (68) which is coupled to the evaluation and control unit (28). The evaluation and control unit (28) is designed to suppress the input signal (90) in a targeted manner with the aid of the test switch (68).

No. of Pages : 22 No. of Claims : 10

(12) PATENT APPLICATION PUBLICATION
(19) INDIA
(22) Date of filing of Application :14/06/2013
(21) Application No.4579/CHENP/2013 A
(43) Publication Date : 05/09/2014

(54) Title of the invention : REACTIVE FUNCTIONAL GROUP MODIFIED MOLECULARLY SELF ASSEMBLING MATERIAL

(51) International classification :C08G69/44,C08G69/46,C08G69/48
(31) Priority Document No :61/424738
(32) Priority Date :20/12/2010
(33) Name of priority country:U.S.A.
(86) International Application No :PCT/US2011/066104
Filing Date :20/12/2011
(87) International Publication No :WO 2012/088081
(61) Patent of Addition to Application Number :NA
Filing Date :NA
(62) Divisional to Application Number :NA
Filing Date :NA

(71)**Name of Applicant :**
1)DOW GLOBAL TECHNOLOGIES LLC
Address of Applicant :2040 Dow Center Midland MI 48674 U.S.A.
(72)**Name of Inventor :**
1)HARRIS William J.
2)KRISHNAMURTHY Pushkala
3)MATTEUCCI Scott T.

(57) Abstract :
The present invention generally relates to a reactive functional group modified molecularly self assembling material; method of making the reactive functional group modified molecularly self assembling material; manufactured article comprising the reactive functional group modified molecularly self assembling material; and a method of shaping the reactive functional group modified molecularly self assembling material.

No. of Pages : 43 No. of Claims : 12

(12) PATENT APPLICATION PUBLICATION
(21) Application No.2816/CHE/2013 A
(19) INDIA
(22) Date of filing of Application :27/06/2013
(43) Publication Date : 05/09/2014

(54) Title of the invention : YARN WINDING UNIT AND YARN WINDING MACHINE

(51) International classification	:B65H	(71)**Name of Applicant :**
(31) Priority Document No	:2012-184019	**1)MURATA MACHINERY, LTD.** Address of Applicant :3 MINAMI OCHIAI-CHO, KISSHOIN, MINAMI-KU, KYOTO-SHI, KYOTO 601-8326 Japan
(32) Priority Date	:23/08/2012	
(33) Name of priority country	:Japan	
(86) International Application No	:NA	(72)**Name of Inventor :**
Filing Date	:NA	**1)TETSUYA NAMIKAWA**
(87) International Publication No	: NA	**2)YASUNOBU TANIGAWA**
(61) Patent of Addition to Application Number	:NA	
Filing Date	:NA	
(62) Divisional to Application Number	:NA	
Filing Date	:NA	

(57) Abstract :
A yarn winding unit (10) includes a winding section (18) that winds a yarn (20) around a winding tube (22) to form a package (30), and a control section (50) that controls the winding section (18). The winding section (18) includes a winding tube supporting section (23) that supports the winding tube (22), a contact roller (29) that rotates in contact with the winding tube (22) or the package (30), and a traversing device (70) that is arranged independently of the contact roller (29) and that traverses the yarn (20) that is to be wound around the winding tube (22) . The control section (50) controls the winding section (18) such that the traversing speed of the traversing device (70) is maintained equal to or below a predetermined speed when the winding of the yarn (20) is started.

No. of Pages : 47 No. of Claims : 8

(12) PATENT APPLICATION PUBLICATION
(21) Application No.2819/CHE/2012 A
(19) INDIA
(22) Date of filing of Application :12/07/2012
(43) Publication Date : 05/09/2014

(54) Title of the invention : CONTROL APPARATUS AND CONTROL PROGRAM FOR LIQUID CHROMATOGRAPH

(51) International classification	:G01N
(31) Priority Document No	:2011-157131
(32) Priority Date	:15/07/2011
(33) Name of priority country	:Japan
(86) International Application No	:NA
Filing Date	:NA
(87) International Publication No	: NA
(61) Patent of Addition to Application Number	:NA
Filing Date	:NA
(62) Divisional to Application Number	:NA
Filing Date	:NA

(71)**Name of Applicant :**
1)SHIMADZU CORPORATION
Address of Applicant :1 Nishinokyo-Kuwabara-cho Nakagyo-ku Kyoto-shi Kyoto 6048511 Japan
(72)**Name of Inventor :**
1)OHASHI Hiroshi
2)YAMAGUCHI Tadayuki
3)TERADA Hidetoshi

(57) Abstract :
The present invention aims at reducing the time required for a series of analyses in the sequential performance of gradient analyses under a variety of conditions. To this end in a control apparatus for controlling the operation of a liquid chromatograph having a gradient analysis function in which a mobile phase composed of a plurality of mixed solvents is used and a chromatograph analysis is performed while the mixture ratio of the solvents is temporally changed the liquid chromatograph is controlled so as to continuously change the mixture ratio of the solvents from an initial mixture ratio to a final mixture ratio when performing a sample analysis; and as to perform before the sample analysis a preparatory liquid supply in which the mixture ratio of the solvents is continuously changed from the initial mixture ratio to the final mixture ratio at a rate higher than that in the sample analysis.

No. of Pages : 42 No. of Claims : 6

(12) PATENT APPLICATION PUBLICATION
(21) Application No.3683/CHENP/2013 A
(19) INDIA
(22) Date of filing of Application :10/05/2013
(43) Publication Date : 05/09/2014

(54) Title of the invention : LOGGING SETUP DEVICE LOGGING SETUP METHOD AND RECORDABLE MEDIUM

(51) International classification :G05B19/05,G05B23/02
(31) Priority Document No :NA
(32) Priority Date :NA
(33) Name of priority country :NA
(86) International Application No :PCT/JP2010/069113
Filing Date :27/10/2010
(87) International Publication No :WO 2012/056539 A1
(61) Patent of Addition to Application Number :NA
Filing Date :NA
(62) Divisional to Application Number :NA
Filing Date :NA

(71)**Name of Applicant :**
1)Mitsubishi Electric Corporation
Address of Applicant :7 3 Marunouchi 2 chome Chiyoda ku Tokyo 1008310 Japan
(72)**Name of Inventor :**
1)TANAKA Shuichi

(57) Abstract :
In order to be capable of making logging setup as easy as possible a logging setup device of the present invention is provided with a logging setup items group database (72) which stores a mapping for each unit to a name of a typical example of a control operation and a related devices group related to the control operation along with a leading XY dependency for each device that makes up the related devices group. A list of names of typical examples of control operations related to a unit using a device to be logged is extracted from the logging setup items group database (72) and an address for each related device making up the related devices group mapped to one name selected by a user from among the extracted list of names is modified on the basis of the leading XY dependency.

No. of Pages : 41 No. of Claims : 7

(12) PATENT APPLICATION PUBLICATION
(19) INDIA
(22) Date of filing of Application :19/06/2013
(21) Application No.4765/CHENP/2013 A
(43) Publication Date : 05/09/2014

(54) Title of the invention : COMPUTERIZED METHOD AND DEVICE FOR ANNOTATING AT LEAST ONE FEATURE OF AN IMAGE OF A VIEW

(51) International classification :G06F17/30
(31) Priority Document No :2131/10
(32) Priority Date :21/12/2010
(33) Name of priority country :Switzerland
(86) International Application No :PCT/EP2011/070382
Filing Date :17/11/2011
(87) International Publication No :WO 2012/084362
(61) Patent of Addition to Application Number :NA
Filing Date :NA
(62) Divisional to Application Number :NA
Filing Date :NA

(71)**Name of Applicant :**
1)ECOLE POLYTECHNIQUE F‰D‰RALE DE LAUSANNE (EPFL)
Address of Applicant :EPFL SRI Station 10 CH 1015 Lausanne Switzerland
(72)**Name of Inventor :**
1)MONNEY Mathieu
2)AYER Serge
3)VETTERLI Martin

(57) Abstract :
A computerized method for annotating at least one feature of an image of a view comprising the steps of: obtaining the image with an image sensor of a portable device retrieving at least one condition based on the at least one condition automatically selecting a feature identification method among a plurality of features identification methods applying the feature identification method for identifying the at least one feature annotating some of the identified features.

No. of Pages : 41 No. of Claims : 20

(12) PATENT APPLICATION PUBLICATION
(21) Application No.2367/CHENP/2013 A
(19) INDIA
(22) Date of filing of Application :26/03/2013
(43) Publication Date : 05/09/2014

(54) Title of the invention : AN ETHYLENE/ALPHA OLEFIN INTERPOLYMER SUITABLE FOR USE IN SHRINKAGE FILM APPLICATIONS AND ARTICLES MADE THEREFROM

(51) International classification :C08F210/16,C08J5/18
(31) Priority Document No :NA
(32) Priority Date :NA
(33) Name of priority country :NA
(86) International Application No :PCT/US2010/050745
Filing Date :29/09/2010
(87) International Publication No :WO 2012/044291
(61) Patent of Addition to Application Number :NA
Filing Date :NA
(62) Divisional to Application Number :NA
Filing Date :NA

(71)**Name of Applicant :**
1)DOW GLOBAL TECHNOLOGIES LLC
Address of Applicant :2040 Dow Center Midland MI 48674 U.S.A.
(72)**Name of Inventor :**
1)KARJALA Teresa P.
2)EFFLER Lawrence J.
3)DEMIRORS Mehmet
4)SERRAT Cristina
5)HAZLITT Lonnie G.

(57) Abstract :
The instant invention provides an ethylene/alpha olefin interpolymer suitable for use in shrinkage film applications and articles made therefrom. The ethylene/alpha olefin interpolymer according to the present invention has a CDBI of less than 60% and comprises at least two fractions in crossfractionation of the ethylene/alpha olefin interpolymer eluting from 85°C to 90°C and from 90°C to 95°C comprising a weight fraction ratio of > 0.68 and a molecular weight homogeneity index of greater than 0.65; wherein the weight fraction ratio is the ratio of the weight of polymer in each fraction divided by the weight of polymer eluting between 95°C and 100°C and the molecular weight homogeneity index is the ratio of the weight average molecular weight of the polymer in the fraction divided by the weight average molecular weight of the polymer eluting between 95°C and 100°C and wherein the ethylene/alpha olefin interpolymer has a density in the range of 0.920 to 0.940 g/cm.

No. of Pages : 57 No. of Claims : 20

(12) PATENT APPLICATION PUBLICATION
(21) Application No.4289/CHENP/2013 A
(19) INDIA
(22) Date of filing of Application :04/06/2013
(43) Publication Date : 05/09/2014

(54) Title of the invention : IMAGE PROCESSING DEVICE AND IMAGE PROCESSING METHOD

(51) International classification :H04N7/30
(31) Priority Document No :2010275116
(32) Priority Date :09/12/2010
(33) Name of priority country :Japan
(86) International Application No :PCT/JP2011/073657
Filing Date :14/10/2011
(87) International Publication No :WO 2012/077408
(61) Patent of Addition to Application Number :NA
Filing Date :NA
(62) Divisional to Application Number :NA
Filing Date :NA

(71)**Name of Applicant :**
1)SONY CORPORATION
Address of Applicant :1 7 1 Konan Minato ku Tokyo 1080075 Japan
(72)**Name of Inventor :**
1)SATO Kazushi

(57) Abstract :
To suppress an increase in the amount of encoding when the number of quantization matrices increases. [Solution] Provided is an image processing device equipped with: a selection unit that selects a transformation unit used for an inverse orthogonal transformation of image data to be decoded from among a plurality of transformation units having differing sizes; a generation unit that generates a second quantization matrix corresponding to a transformation unit having a second size from a first quantization matrix corresponding to a transformation unit having a first size; and an inverse quantization unit that when the transformation unit having the second size is selected by the selection unit performs inverse quantization of transformation coefficient data of the image data using the second quantization matrix generated by the generation unit.

No. of Pages : 89 No. of Claims : 14

(12) PATENT APPLICATION PUBLICATION
(21) Application No.4681/CHENP/2013 A
(19) INDIA
(22) Date of filing of Application :18/06/2013
(43) Publication Date : 05/09/2014

(54) Title of the invention : RADIATION CURABLE COATING COMPOSITIONS FOR METAL

(51) International classification :C09D4/00,C09D4/06
(31) Priority Document No :61/427582
(32) Priority Date :28/12/2010
(33) Name of priority country :U.S.A.
(86) International Application No :PCT/EP2011/073929
Filing Date :23/12/2011
(87) International Publication No :WO 2012/089655
(61) Patent of Addition to Application Number :NA
Filing Date :NA
(62) Divisional to Application Number :NA
Filing Date :NA

(71)**Name of Applicant :**
1)AKZO NOBEL COATINGS INTERNATIONAL B.V.
Address of Applicant :Velperweg 76 NL 6824 BM Arnhem Netherlands
(72)**Name of Inventor :**
1)CRAUN Gary P.
2)GARDNER Kenneth James
3)MILLER Patricia

(57) Abstract :
Various embodiments of radiation curable coating compositions are provided. In one embodiment a radiation curable coating composition includes a (meth)acrylate functional compound and an adhesion promoting (meth)acrylate compound. The radiation curable coating composition can also include a (meth)acrylate functional compound a poly(meth)acrylate and a reactive diluent. The (meth)acrylate functional compound can be made from the reaction of a multifunctional isocyanate a polyol and a hydroxyl functional (meth)acrylate in the presence of a catalyst.

No. of Pages : 11 No. of Claims : 20

(12) PATENT APPLICATION PUBLICATION
(19) INDIA
(22) Date of filing of Application :20/06/2013
(21) Application No.4789/CHENP/2013 A
(43) Publication Date : 05/09/2014

(54) Title of the invention : OIL CONTAINING WASTEWATER TREATMENT SYSTEM

(51) International classification :C02F1/44,B01D17/035,B01D21/00
(31) Priority Document No :2011192916
(32) Priority Date :05/09/2011
(33) Name of priority country :Japan
(86) International Application No :PCT/JP2012/071628
Filing Date :28/08/2012
(87) International Publication No :WO 2013/035576
(61) Patent of Addition to Application Number :NA
Filing Date :NA
(62) Divisional to Application Number :NA
Filing Date :NA

(71)**Name of Applicant :**
1)SUMITOMO ELECTRIC FINE POLYMER INC.
Address of Applicant :950 Asashiro nishi 1 chome Kumatori cho Sennan gun Osaka 5900458 Japan
(72)**Name of Inventor :**
1)USHIKOSHI Kenichi
2)MORITA Toru
3)IDA Kiyoshi
4)MIZUTANI Teizo

(57) Abstract :
In order to simplify devices by efficiently combining dissimilarities of respective steps used in an oil containing wastewater treatment system in a supply path of raw water produced from oil containing wastewater a separation tank for floating and separating an oil content and downstream from the separation tank a membrane filtration tank in which a membrane separation module produced from a hollow fiber membrane or a flat membrane is disposed therein and a diffuser for generating air bubbles is installed below the membrane separation module is disposed and a supply pipe provided with a circulating pump in the middle thereof to supply the raw water from the separation tank to the membrane filtration tank and a return pipe for returning unfiltered water containing the oil content and the air bubbles from the membrane filtration tank to the separation tank are provided.

No. of Pages : 24 No. of Claims : 6

(12) PATENT APPLICATION PUBLICATION
(21) Application No.392/CHE/2012 A
(19) INDIA
(22) Date of filing of Application :02/02/2012
(43) Publication Date : 05/09/2014

(54) Title of the invention : NOVEL HERBAL COMPOSITION AS DIETARY SUPPLEMENT FOR MEN TO INCREASE SPERM COUNT AND VITAL POWER

(51) International classification :A61K
(31) Priority Document No :NA
(32) Priority Date :NA
(33) Name of priority country :NA
(86) International Application No :NA
Filing Date :NA
(87) International Publication No : NA
(61) Patent of Addition to Application Number :NA
Filing Date :NA
(62) Divisional to Application Number :NA
Filing Date :NA

(71)**Name of Applicant :**
1)EBRAHIM E Y Y BUHIMED
Address of Applicant :NO.194/1, 3RD CROSS, GURURAJ LAYOUT, BEHIND MANASA SAROVAR APARTMENT, DODDANNEKUNDI, MARATHALLI, BANGALORE - 560 037 Karnataka India
(72)**Name of Inventor :**
1)EBRAHIM E Y Y BUHIMED

(57) Abstract :
The present invention relates to a novel ayurvedic composition and use thereof. More particularly, the present invention relates to a composition that comprises of ingredients, namely, Barley, Cress, Myrrh, and Habba soda or the extract thereof, when taken as a food supplement has the activity of enhancing the metabolic function of the entire human body, resulting in an improvement in sexual function, increasing sperm count and an increase in reproductive function, and thus, has beneficial effects on nutritional tonic, sexual function improvement, infertility treatment, and the like for men.

No. of Pages : 11 No. of Claims : 5

(12) PATENT APPLICATION PUBLICATION
(19) INDIA
(22) Date of filing of Application :30/05/2013
(21) Application No.4178/CHENP/2013 A
(43) Publication Date : 05/09/2014

(54) Title of the invention : TARGETED ALTERATION OF DNA

(51) International classification :C12N15/10
(31) Priority Document No :61/419179
(32) Priority Date :02/12/2010
(33) Name of priority country :U.S.A.
(86) International Application No :PCT/NL2011/050804
Filing Date :25/11/2011
(87) International Publication No :WO 2012/074385
(61) Patent of Addition to Application Number :NA
Filing Date :NA
(62) Divisional to Application Number :NA
Filing Date :NA

(71)**Name of Applicant :**
1)KEYGENE N.V.
Address of Applicant :P.O. Box 216 NL 6700 AE Wageningen Netherlands
(72)**Name of Inventor :**
1)BUNDOCK Paul
2)LHUISSIER Franck

(57) Abstract :
The current invention relates to a method for targeted alteration of acceptor DNA for example duplex acceptor DNA. The method comprises the use of an oligonucleotide having at least one mismatch relative to the targeted (duplex) acceptor DNA. The mismatch is located at specific positions within said oligonucleotide. Also provided is a kit that comprises instructions for performing the method according to the inventions and in a preferred embodiment comprises an oligonucleotide suitable for use in the method.

No. of Pages : 45 No. of Claims : 17

(12) PATENT APPLICATION PUBLICATION
(19) INDIA
(22) Date of filing of Application :06/06/2013
(21) Application No.4365/CHENP/2013 A
(43) Publication Date : 05/09/2014

(54) Title of the invention : AUTOMATIC ANTI SLANTING ADJUSTING ROLLER FOR BELT CONVEYER

(51) International classification :B65G15/64,B65G39/16,B65G39/04
(31) Priority Document No :201110076597.4
(32) Priority Date :29/03/2011
(33) Name of priority country:China
(86) International Application No :PCT/CN2011/083388
Filing Date :02/12/2011
(87) International Publication No :WO 2012/129926
(61) Patent of Addition to Application Number :NA
Filing Date :NA
(62) Divisional to Application Number :NA
Filing Date :NA

(71)**Name of Applicant :**
1)HERMAN (NANJING) TECHNICAL & ENGINEERING PTE. LTD
Address of Applicant :Sanjiangkou Industry Base Jinganzhen Qixia Nanjing Jiangsu 210057 China
(72)**Name of Inventor :**
1)WANG Jifeng

(57) Abstract :
Disclosed is an automatic anti slanting adjusting roller for belt conveyer which comprises a rubber roller (1) a rubber sleeve (2) a wobbler mechanism (3) wherein said rubber roller (1) is divided into two left right symmetric rubber roller portions the wobbler mechanism (3) is located between the two rubber roller portions and the wobbler mechanism (3) is composed of bolts (31) a bearing cover (32) a sealing ring (33) a rolling bearing (34) an inner bushing (35) a central bushing (36) an outer bushing (37) a cylindrical pin (38) and a central swing axle (39). In the present invention with the essential moving mechanism being centralized in the wobbler mechanism and with the effect of the sealing ring and rubber sleeve dustproof and waterproof effects are made more reliable enabling the automatic anti slanting adjusting roller to be used in severe environments. The rubber roller can be varied to meet the requirements of belt conveyers of various specifications. The wobbler mechanism is easily maintained and replaced and it is easy to organize production thereof.

No. of Pages : 15 No. of Claims : 2

(12) PATENT APPLICATION PUBLICATION
(19) INDIA
(22) Date of filing of Application :20/06/2013
(21) Application No.4811/CHENP/2013 A
(43) Publication Date : 05/09/2014

(54) Title of the invention : USE OF HYDROPHOBICALLY ASSOCIATING COPOLYMER AS ADDITIVE IN SPECIFIC OILFIELD APPLICATIONS

(51) International classification :C08F220/00,C08F220/06,C08F220/56
(31) Priority Document No :10192387.8
(32) Priority Date :24/11/2010
(33) Name of priority country :EPO
(86) International Application No :PCT/IB2011/054855
Filing Date :02/11/2011
(87) International Publication No :WO 2012/069942 A3
(61) Patent of Addition to Application Number :NA
Filing Date :NA
(62) Divisional to Application Number :NA
Filing Date :NA

(71)**Name of Applicant :**
1)BASF SE
Address of Applicant :67056 Ludwigshafen Germany
2)BASF (CHINA) COMPANY LIMITED
(72)**Name of Inventor :**
1)REICHENBACH KLINKE Roland
2)LAFUENTE CERDA Oscar
3)ASSMANN Andrea
4)LANGLOTZ Bjrn

(57) Abstract :
What is proposed is the use of a water soluble hydrophobically associating copolymer as an additive in the development exploitation and completion of underground mineral oil and natural gas deposits and in deep drillings wherein the copolymer comprises (a) at least one monoethylenically unsaturated monomer (a) selected from HC=C(R) R O (CH CH O) (CH CH(R) O) R (I) and/or HC=C(R) O (CH CH O) R (II) and (b) at least one monoethylenically unsaturated hydrophilic monomer (b) different from monomer (a) wherein the copolymer is obtainable through copolymerization of the monomers (a) and (b) in the presence of at least one surfactant (c).

No. of Pages : 41 No. of Claims : 21

(12) PATENT APPLICATION PUBLICATION
(19) INDIA
(22) Date of filing of Application :06/06/2013
(21) Application No.2478/CHE/2013 A
(43) Publication Date : 05/09/2014

(54) Title of the invention : PROFILE CLAMP

(51) International classification :F16L23/04
(31) Priority Document No :12 004 486.2
(32) Priority Date :14/06/2012
(33) Name of priority country :EPO
(86) International Application No :NA
Filing Date :NA
(87) International Publication No : NA
(61) Patent of Addition to Application Number :NA
Filing Date :NA
(62) Divisional to Application Number :NA
Filing Date :NA

(71)**Name of Applicant :**
1)NORMA GERMANY GMBH
Address of Applicant :EDISONSTRASSE 4, 63477 MAINTAL Germany
(72)**Name of Inventor :**
1)KAYACIK, ERKAN
2)BAUDOIN, MANUEL
3)HEYWOOD, JONATHAN

(57) Abstract :
Profile clamp and method of forming same. The profile clamp includes a first half-shell having a first tensioning head on a first circumferential end and a first connection geometry on a second circumferential end, a second half-shell having a second tensioning head on a first circumferential end and a second connection geometry on a second circumferential end, and, in an installation-ready state, a hinge connection, which is formed by an engagement between the first connection geometry and the second connection geometry, having a limited opening angle.

No. of Pages : 18 No. of Claims : 20

(12) PATENT APPLICATION PUBLICATION
(21) Application No.2479/CHE/2013 A
(19) INDIA
(22) Date of filing of Application :06/06/2013
(43) Publication Date : 05/09/2014

(54) Title of the invention : EMBOSSED PLASTIC FOIL/FILM FOR MULTI-LAYER OR LAMINATED GLASS VITRIFICATION

(51) International classification :C09K
(31) Priority Document No :102012209939
(32) Priority Date :13/06/2012
(33) Name of priority country :Germany
(86) International Application No :NA
Filing Date :NA
(87) International Publication No : NA
(61) Patent of Addition to Application Number :NA
Filing Date :NA
(62) Divisional to Application Number :NA
Filing Date :NA

(71)**Name of Applicant :**
1)KURARAY EUROPE GMBH
Address of Applicant :PHILLIP-REIS-STRASSE 4, 65795, HATTERSHEIM Germany
(72)**Name of Inventor :**
1)ROGALL, JAN DENIS
2)KELLER, UWE

(57) Abstract :
The invention pertains to a Plastic foil, which have at least on one side a surface structure made of parallely arranged/ configured rows of insulated embossments (a), is thereby characterized that the plastic foil is based on a material of the group: plasticized (softener-containing) polyvinyl acetal, plasticized polyvinyl butyral, ethylene/vinyl acetate-copolymers, ethylene/vinyl acetate/vinyl alcohol-copolymers, partially-acetalised ethylene/vinyl acetate/vinyl alcohol-copolymers, polyvinyl chloride and/or polyurethane, and the coefficient from length and width of the embossments amounts to 2 to 50, and the parallel-configured rows are so arranged with an offset to one another that the embossments of one row periodically abut or border the neighbouring rows with an offset, and have a common valley at the height of the base-surface of the embossments. The foils can be used for production of multi-layer glass laminates.

No. of Pages : 21 No. of Claims : 14

(12) PATENT APPLICATION PUBLICATION
(21) Application No.473/CHE/2012 A
(19) INDIA
(22) Date of filing of Application :08/02/2012
(43) Publication Date : 05/09/2014

(54) Title of the invention : VEHICLE FUEL CONSUMPTION INDICATION MECHANISM

(51) International classification :G01N
(31) Priority Document No :NA
(32) Priority Date :NA
(33) Name of priority country :NA
(86) International Application No :NA
Filing Date :NA
(87) International Publication No : NA
(61) Patent of Addition to Application Number :NA
Filing Date :NA
(62) Divisional to Application Number :NA
Filing Date :NA

(71)**Name of Applicant :**
1)TVS MOTOR COMPANY LIMITED
Address of Applicant :JAYALAKSHMI ESTATES NO.29 (OLD NO.8) HADDOWS ROAD, CHENNAI 600 006 Tamil Nadu India
(72)**Name of Inventor :**
1)SAMRAJ JABEZ DHINAGAR
2)RAVIKUMAR RAMASAMUDRA PRAKASH

(57) Abstract :
Present invention provides a vehicle fuel consumption indication mechanism for a motor vehicle which has manual fuel level correction measure on every refilling of fuel which provides a better way for fuel consumption regulation for the user. This mechanism has a fuel consumption computation unit to provide display data to the display unit based upon the input from different means such as ignition control unit, sensor units and manual input switches. Inputs provided can be fuel flow path resistance or fuel level display corrections to the fuel consumption computation unit.

No. of Pages : 13 No. of Claims : 9

(12) PATENT APPLICATION PUBLICATION
(19) INDIA
(22) Date of filing of Application :19/06/2013
(21) Application No.4731/CHENP/2013 A
(43) Publication Date : 05/09/2014

(54) Title of the invention : LED BASED ILLUMINATION MODULES WITH THIN COLOR CONVERTING LAYERS

(51) International classification :H05B33/20,H01L33/50,H05B33/22
(31) Priority Document No :61/428691
(32) Priority Date :30/12/2010
(33) Name of priority country :U.S.A.
(86) International Application No :PCT/US2011/066270
Filing Date :20/12/2011
(87) International Publication No :WO 2012/092037
(61) Patent of Addition to Application Number :NA
Filing Date :NA
(62) Divisional to Application Number :NA
Filing Date :NA

(71)**Name of Applicant :**
1)XICATO INC.
Address of Applicant :4880 Stevens Creek Blvd. Suite 204 San Jose California 95129 U.S.A.
(72)**Name of Inventor :**
1)RAVILLISETTY Padmanabha Rao
2)HARBERS Gerard

(57) Abstract :
An illumination module includes a plurality of Light Emitting Diodes (LEDs). The illumination module may include a reflective color converting element with a PTFE layer and a color converting layer fixed to the PTFE layer. The color converting layer includes phosphor particles embedded in a polymer matrix and has a thickness that is less than five times an average diameter of the phosphor particles. The illumination module may include a transmissive color converting element. The color converting elements may be produced by mixing a polymer binder with a solvent and phosphor particles to form a homogeneous suspension of the phosphor particles. The homogeneous suspension is applied to a surface to form an uncured color converting layer which is heated to vaporize the solvent. The cured color converting layer includes the phosphor particles suspended in the polymer binder

No. of Pages : 69 No. of Claims : 32

(12) PATENT APPLICATION PUBLICATION
(21) Application No.4950/CHENP/2013 A
(19) INDIA
(22) Date of filing of Application :25/06/2013
(43) Publication Date : 05/09/2014

(54) Title of the invention : CASCADE CONVERTER STATION AND MULTI END CASCADE HVDC POWER TRANSMISSION SYSTEM

(51) International classification :H02J3/36
(31) Priority Document No :NA
(32) Priority Date :NA
(33) Name of priority country :NA
(86) International Application No :PCT/CN2010/002001
Filing Date :09/12/2010
(87) International Publication No :WO 2012/075610
(61) Patent of Addition to Application Number :NA
Filing Date :NA
(62) Divisional to Application Number :NA
Filing Date :NA

(71)**Name of Applicant :**
1)STATE GRID CORPORATION OF CHINA
Address of Applicant :No. 86 Xi Changan Avenue Xicheng District Beijing 100031 China
(72)**Name of Inventor :**
1)SUN Xin

(57) Abstract :
A cascade converter station and a multi end cascade high voltage direct current (HVDC) power transmission system. The converter station includes a low voltage end converter station (11) and a high voltage end converter station (12). Each electrode of the low voltage end converter station (11) includes a converter transformer (111a 111b) coupled to a first alternating current (AC) power grid a converter valve (112a 112b) coupled to the converter transformer (111a 111b) and smooth reactors (115a 115b). The high voltage end converter station (12) connected in series with the low voltage end converter station (11) through a medium voltage direct current (DC) power transmission line (13) and connected to a HVDC power transmission line (14). Each electrode of the high voltage end converter station (12) includes a converter transformer (121a 121b) coupled to a second AC power grid a converter valve (122a 122b) coupled to the converter transformer (121a 121b) and smoothing reactors (125a 125b). A ground electrode line (126) and a metal return line (128) are provided in the low voltage end converter station (11). A ground electrode line (133) and neutral bus switches (140a 140b) can be further provided in the high voltage end converter station (12). With the cascade converter station and the multi end cascade HVDC power transmission system HVDC power transmission can be achieved in a flexible reliable and economical manner.

No. of Pages : 63 No. of Claims : 21

(12) PATENT APPLICATION PUBLICATION
(21) Application No.409/CHENP/2013 A
(19) INDIA
(22) Date of filing of Application :17/01/2013
(43) Publication Date : 05/09/2014

(54) Title of the invention : SPINAL SURGERY IMPLANTS AND DELIVERY SYSTEM

(51) International classification :A61F2/44,A61F2/46
(31) Priority Document No :61/366166
(32) Priority Date :21/07/2010
(33) Name of priority country :U.S.A.
(86) International Application No :PCT/IB2011/053268
Filing Date :21/07/2011
(87) International Publication No :WO 2012/011078
(61) Patent of Addition to Application Number :NA
Filing Date :NA
(62) Divisional to Application Number :NA
Filing Date :NA

(71)**Name of Applicant :**
1)NLT SPINE LTD.
Address of Applicant :P.O. Box 2289 Indus Zone Kfar Saba 44641 Israel
(72)**Name of Inventor :**
1)SIEGAL Tzony
2)KEREN Dvir
3)LOEBL Oded
4)TOUBIA Didier

(57) Abstract :
A spinal surgery tool system including an elongated conduit and an implant (400) is disclosed. The implant assumes a straight configuration within the elongated conduit and is deployable from the elongated conduit into a closed or nearly closed loop configuration for deployment interposed between two tissue surfaces to define an enclosed volume. The conduit and the implant are configured such that when the implant is deployed in the loop configuration an opening formed in a proximal portion of the implant forms a contiguous channel (440) with a passageway along the conduit so as to provide a continuous access channel along the elongated conduit into the enclosed volume.

No. of Pages : 39 No. of Claims : 28

(12) PATENT APPLICATION PUBLICATION
(19) INDIA
(22) Date of filing of Application :14/06/2013
(21) Application No.4567/CHENP/2013 A
(43) Publication Date : 05/09/2014

(54) Title of the invention : BRAIN ELECTRODE LEAD ANCHORING DEVICE

(51) International classification :A61N1/375
(31) Priority Document No :201010588332.8
(32) Priority Date :15/12/2010
(33) Name of priority country :China
(86) International Application No :PCT/CN2011/083482
Filing Date :05/12/2011
(87) International Publication No :WO 2012/079478
(61) Patent of Addition to Application Number :NA
Filing Date :NA
(62) Divisional to Application Number :NA
Filing Date :NA

(71)**Name of Applicant :**
1)SCENERAY CO. LTD
Address of Applicant :Building C16 BioBay No. 218 Xing Hu Rd. Suzhou Industrial Park Suzhou Jiangsu 215123 China
(72)**Name of Inventor :**
1)YIN Weizhong

(57) Abstract :
Disclosed is a brain electrode lead anchoring device comprising a cranial burr hole grommet which includes a cranial burr hole junction portion for anchoring the cranial burr hole grommet on the cranial burr hole with the inner wall of the cranial burr hole junction portion forming an electrode aperture through which a brain electrode lead passes; and a cranial burr hole plug which has at least one groove for the passing through and anchoring of the brain electrode lead and which is arranged in the electrode aperture to close the electrode aperture. Compared with the prior art after the electrode lead reaches the designated target by means of a lead guiding needle a doctor pulls out the lead guiding needle and at this time the cranial burr hole plug immediately holds and clips tightly the electrode lead such that the electrode does not move in a horizontal direction or a vertical direction anchoring the electrode lead securely and accurately at the designated target position and avoiding the phenomenon of target deviation from occurring during the operation process to close the cranial burr hole grommet by the doctor. The height of the cranial burr hole plug does not exceed that of the cranial burr hole grommet such that the feeling of discomfort by the patient is avoided and the appearance is not affected.

No. of Pages : 21 No. of Claims : 10

(12) PATENT APPLICATION PUBLICATION
(19) INDIA
(22) Date of filing of Application :25/06/2013
(21) Application No.4983/CHENP/2013 A
(43) Publication Date : 05/09/2014

(54) Title of the invention : AD HOC FILE SHARING

(51) International classification :H04L29/08,H04W76/02
(31) Priority Document No :13/006378
(32) Priority Date :13/01/2011
(33) Name of priority country :U.S.A.
(86) International Application No :PCT/US2012/021073
Filing Date :12/01/2012
(87) International Publication No :WO 2012/097147
(61) Patent of Addition to Application Number :NA
Filing Date :NA
(62) Divisional to Application Number :NA
Filing Date :NA

(71)**Name of Applicant :**
1)APPLE INC.
Address of Applicant :1 Infinite Loop Cupertino CA 95014 U.S.A.
(72)**Name of Inventor :**
1)IAROCCI John Joseph
2)LINN Christopher Scott
3)KROCHMAL Marc Jason
4)STATTENFIELD Keith

(57) Abstract :
A method and apparatus of a device that transfers files and performs file browsing using an ad hoc file sharing service is described. In an exemplary method the device transmits an advertisement of the ad hoc file sharing service to each of one or more of other devices. The transmitted advertisements each include a user identity of the user associated with the first device. Furthermore access to the ad hoc file sharing service is granted on a per user basis. The device establishes a connection with each of the other devices and transfers files with each of the plurality of other devices.

No. of Pages : 44 No. of Claims : 21

(12) PATENT APPLICATION PUBLICATION
(19) INDIA
(22) Date of filing of Application :26/06/2013
(21) Application No.4984/CHENP/2013 A
(43) Publication Date : 05/09/2014

(54) Title of the invention : MANAGEMENT CENTER FOR COMMUNICATION SYSTEM CUSTOMER PREMISES EQUIPMENT

(51) International classification :H04M11/06,H04L12/28,H04L12/24
(31) Priority Document No :NA
(32) Priority Date :NA
(33) Name of priority country :NA
(86) International Application No :PCT/US2010/062604
Filing Date :30/12/2010
(87) International Publication No :WO 2012/091725
(61) Patent of Addition to Application Number :NA
Filing Date :NA
(62) Divisional to Application Number :NA
Filing Date :NA

(71)**Name of Applicant :**
1)ADAPTIVE SPECTRUM AND SIGNAL ALIGNMENT INC.
Address of Applicant :333 Twin Dolphin Drive Redwood City CA 94065 U.S.A.
(72)**Name of Inventor :**
1)CHOW Peter
2)RHEE Wonjong
3)TEHRANI Ardavan Maleki
4)GOLDBURG Marc
5)GINIS Georgios
6)MOHSENI Mehdi

(57) Abstract :
Described are systems and methods for a Digital Subscriber Line (DSL) customer premises equipment (CPE) Management Center (CMC). In one embodiment the CMC includes a communications interface to receive information from the CPE device regarding operation of the CPE device. The received information is analyzed and a command signal generation module generates a corresponding command signal for transmission to the at least one CPE device to modify the CPE device operation based on the analysis results in a manner which either enhances CPE device performance for example increasing data rate or improves line stability for example reducing CPE error rate.

No. of Pages : 44 No. of Claims : 22

(12) PATENT APPLICATION PUBLICATION
(19) INDIA
(22) Date of filing of Application :07/05/2013
(21) Application No.3588/CHENP/2013 A
(43) Publication Date : 05/09/2014

(54) Title of the invention : METHOD FOR INCREASING YIELD AND FINE CHEMICAL PRODUCTION IN PLANTS

(51) International classification :C12N15/82
(31) Priority Document No :10190115.5
(32) Priority Date :05/11/2010
(33) Name of priority country :EPO
(86) International Application No :PCT/IB2011/054792
Filing Date :27/10/2011
(87) International Publication No :WO 2012/059849
(61) Patent of Addition to Application Number :NA
Filing Date :NA
(62) Divisional to Application Number :NA
Filing Date :NA

(71)**Name of Applicant :**
1)BASF PLANT SCIENCE COMPANY GMBH
Address of Applicant :67056 Ludwigshafen Germany
2)BASF (CHINA) COMPANY LIMITED
(72)**Name of Inventor :**
1)PLESCH Gunnar
2)BLAU Astrid
3)HEROLD Michael Manfred
4)KAMLAGE Beate
5)WENDEL Birgit
6)PUZIO Piotr
7)BL„SING Oliver
8)THIMM Oliver
9)HENDRIKS Janneke
10)REUZEAU Christophe

(57) Abstract :
A method for enhancing yield related traits in plants by modulating expression in a plant of a nucleic acid encoding a POI (Protein Of Interest) polypeptide is provided. Methods for the production of plants having modulated expression of a nucleic acid encoding a DnaJ like chaperone polypeptide are provided in which plants have enhanced yield related traits compared to control plants. Nucleic acids encoding DnaJ like chaperone constructs comprising the same and uses thereof are also provided.

No. of Pages : 124 No. of Claims : 15

(12) PATENT APPLICATION PUBLICATION
(19) INDIA
(22) Date of filing of Application :31/05/2013
(21) Application No.4213/CHENP/2013 A
(43) Publication Date : 05/09/2014

(54) Title of the invention : ORAL METRONIDAZOLE PHARMACEUTICAL COMPOSITIONS

(51) International classification	:A61K9/28
(31) Priority Document No	:3592/CHE/2010
(32) Priority Date	:29/11/2010
(33) Name of priority country	:India
(86) International Application No	:PCT/US2011/062406
Filing Date	:29/11/2011
(87) International Publication No	:WO 2012/075015
(61) Patent of Addition to Application Number	:NA
Filing Date	:NA
(62) Divisional to Application Number	:NA
Filing Date	:NA

(71)**Name of Applicant :**
1)DR. REDDYS LABORATORIES LTD.
Address of Applicant :8 2 337 Road No. 3 Benjara Hills Hyderabad Andhra Pradesh 500034 India
(72)**Name of Inventor :**
1)PADHI Bijay Kumar
2)TARIQ Muzammil
3)MANDAWGADE Sagar Dilip
4)GHANDI Rajesh
5)RAGHUVANSHI Rajeev Singh
6)SURAKANTI Dushyanth
7)ALLENBY Kent

(57) Abstract :
The present invention relates to an oral pharmaceutical composition comprising metronidazole wherein metronidazole is released from the composition generally at the pH 5.0 and above.

No. of Pages : 51 No. of Claims : 43

(12) PATENT APPLICATION PUBLICATION
(19) INDIA
(22) Date of filing of Application :19/06/2013
(21) Application No.4725/CHENP/2013 A
(43) Publication Date : 05/09/2014

(54) Title of the invention : DOOR OPENING/CLOSING CONTROL SYSTEM AND DOOR OPENING/CLOSING CONTROL DEVICE

(51) International classification	:E05B49/00,G06K17/00,H04Q9/00
(31) Priority Document No	:2010276249
(32) Priority Date	:10/12/2010
(33) Name of priority country	:Japan
(86) International Application No	:PCT/JP2011/078540
Filing Date	:09/12/2011
(87) International Publication No	:WO 2012/077782
(61) Patent of Addition to Application Number	:NA
Filing Date	:NA
(62) Divisional to Application Number	:NA
Filing Date	:NA

(71)**Name of Applicant :**
1)PANASONIC CORPORATION
Address of Applicant :1006 Oaza Kadoma Kadoma shi Osaka 5718501 Japan
(72)**Name of Inventor :**
1)SHINYASHIKI Yasufumi
2)IMAI Tomikazu
3)FURUKAWA Junichi
4)KIDOKORO Masahiro
5)MURAKAMI Kaoru
6)USUKI Izumi
7)ODA Tomohiro
8)SATO Toshitaka
9)WANAKA Tsuyoshi

(57) Abstract :
This door opening/closing control system is provided with: a plurality of door opening/closing devices that lock and unlock a corresponding door; a door opening/closing control device that controls the plurality of door opening/closing devices; and a plurality of input devices that when ID information is input transmit the input ID information to the door opening/closing control device. The door opening/closing control device is provided with a recording device and a control device. The recording device is configured in a manner so as to record the corresponding relationship between the door opening/closing devices and the combination of the ID information and the input devices. The control device is configured in a manner so that when ID information is received from the input devices the control device refers to the corresponding relationship recorded at the recording device selects the door opening/closing device corresponding to the combination of the received ID information and the input device that transmitted the ID information and causes the selected door opening/closing device to unlock the corresponding door.

No. of Pages : 36 No. of Claims : 8

(12) PATENT APPLICATION PUBLICATION
(19) INDIA
(22) Date of filing of Application :27/11/2012
(21) Application No.4946/CHE/2012 A
(43) Publication Date : 05/09/2014

(54) Title of the invention : LIQUID POWER GENERATION APPARATUS AND LIQUID POWER GENERATION SYSTEM

(51) International classification	:B05B
(31) Priority Document No	:JP2011-262761
(32) Priority Date	:30/11/2011
(33) Name of priority country	:Japan
(86) International Application No	:NA
Filing Date	:NA
(87) International Publication No	: NA
(61) Patent of Addition to Application Number	:NA
Filing Date	:NA
(62) Divisional to Application Number	:NA
Filing Date	:NA

(71)**Name of Applicant :**
1)SHINOHARA, TOORU
Address of Applicant :1-20-9, SYONAN KOKUSAI MURA, YOKOSUKA-SHI, KANAGAWA 2400107 Japan
(72)**Name of Inventor :**
1)SHINOHARA, TOORU

(57) Abstract :
A liquid power generation apparatus LG comprises a movable liquid tank 1, a linear-rotation conversion mechanism 2, liquid introducing means 3, controlling means 4, liquid discharging means 5, liquid tank returning means 6, and a generator 7. The movable liquid tank 1 can vertically move. The linear-rotation conversion mechanism 2 generates a rotation output in tandem with the vertical movement of the movable liquid tank. The liquid introducing means 3 introduces a liquid when the movable liquid tank is provided at an upper position. The controlling means 4 moves down the movable liquid tank from the upper position. The liquid discharging means 5 discharges the liquid when the movable liquid tank is lowered. The liquid tank returning means 6 moves up the movable liquid tank and returns it to its original position. The generator 7 generates electricity by using a rotation output from the linear-rotation conversion mechanism.

No. of Pages : 114 No. of Claims : 8

(12) PATENT APPLICATION PUBLICATION
(19) INDIA
(22) Date of filing of Application :27/06/2013
(21) Application No.5063/CHENP/2013 A
(43) Publication Date : 05/09/2014

(54) Title of the invention : TIME SHARED AND CONCURRENT MULTI PROTOCOL BEACON TRANSMISSION DESIGN

(51) International classification :H04W48/12,H04W84/04
(31) Priority Document No :61/438644
(32) Priority Date :01/02/2011
(33) Name of priority country :U.S.A.
(86) International Application No :PCT/US2012/023555
Filing Date :01/02/2012
(87) International Publication No :WO 2012/106480
(61) Patent of Addition to Application Number :NA
Filing Date :NA
(62) Divisional to Application Number :NA
Filing Date :NA

(71)**Name of Applicant :**
1)QUALCOMM Incorporated
Address of Applicant :Attn: International IP Administration 5775 Morehouse Drive San Diego California 92121 U.S.A.
(72)**Name of Inventor :**
1)MAKH Vansh Pal Singh
2)PATEL Chirag Sureshbhai
3)TOKGOZ Yeliz
4)YAVUZ Mehmet
5)SORIAGA Joseph B.
6)DANGUI Rahul

(57) Abstract :
A base station in a cellular wireless communications system uses one or more control algorithms to control a transmission pattern of a 1xRTT or DO discovery beacon. The transmission pattern enables access terminals using any one of multiple wake up periods and wake up offsets to discover all macrocell frequencies in a finite amount of time. In addition for base stations allocating a single transmit chain to both 1xRTT and DO beacons the transmission pattern enables a definite maximum discovery time for both 1xRTT and DO beacons for all access terminals entering the base station coverage.

No. of Pages : 84 No. of Claims : 68

(12) PATENT APPLICATION PUBLICATION
(19) INDIA
(22) Date of filing of Application :17/06/2013
(21) Application No.4645/CHENP/2013 A
(43) Publication Date : 05/09/2014

(54) Title of the invention : TUBULAR PRESSURE ACCUMULATOR IN PARTICULAR FOR MIXTURE COMPRESSING SPARK IGNITION INTERNAL COMBUSTION ENGINES

(51) International classification :F02M55/02,F02M69/46,B21C37/08
(31) Priority Document No :10 2010 064 021.2
(32) Priority Date :23/12/2010
(33) Name of priority country :Germany
(86) International Application No :PCT/EP2011/069430
Filing Date :04/11/2011
(87) International Publication No :WO 2012/084326
(61) Patent of Addition to Application Number :NA
Filing Date :NA
(62) Divisional to Application Number :NA
Filing Date :NA

(71)**Name of Applicant :**
1)ROBERT BOSCH GMBH
Address of Applicant :Postfach 30 02 20 70442 Stuttgart Germany
(72)**Name of Inventor :**
1)BOLZ Thilo
2)LANG Klaus
3)HAVERLAND Daniel
4)SCHIERHOLZ Norbert
5)GRUSCHWITZ Heiko

(57) Abstract :
The invention relates to a tubular pressure accumulator (1) used in particular as a fuel distribution rail for a mixture compressing spark ignition internal combustion engine comprising a metal wall (2) which is bent into a tube. Longitudinal sides (10 11) of the metal wall (2) bent into a tube associated with each other are connected to each other by a welding seam (15). The metal wall (2) which is bent into a tube further comprises a design feature (3 4) which is formed by machining the metal wall (2) before welding and by bending the metal wall (2).

No. of Pages : 20 No. of Claims : 11

(12) PATENT APPLICATION PUBLICATION
(19) INDIA
(22) Date of filing of Application :25/06/2013
(21) Application No.4967/CHENP/2013 A
(43) Publication Date : 05/09/2014

(54) Title of the invention : OUTDOOR URETHANE ADHESIVE AGENT

(51) International classification :C09J175/04,C08G18/42,C08G18/62
(31) Priority Document No :2010292442
(32) Priority Date :28/12/2010
(33) Name of priority country :Japan
(86) International Application No :PCT/JP2011/079810
Filing Date :22/12/2011
(87) International Publication No :WO 2012/090857
(61) Patent of Addition to Application Number :NA
Filing Date :NA
(62) Divisional to Application Number :NA
Filing Date :NA

(71)**Name of Applicant :**
1)Henkel AG & Co. KGaA
Address of Applicant :Henkelstrasse 67 Dusesseldorf 40589 Germany
(72)**Name of Inventor :**
1)MATSUKI Yuichi
2)YOSHIDA Yoshio
3)ITO Shoko

(57) Abstract :
Provided are: an outdoor urethane adhesive agent which has excellent initial adhesion properties exhibits excellent adhesion properties after being cured can be cured into a coating film having excellent flexibility and preferably has superior weather resistance; a solar cell back sheet which is produced using the adhesive agent; and a solar cell module which is produced using the solar cell back sheet. An outdoor urethane adhesive agent (A) comprising a urethane resin (A) produced by the reaction of an isocyanate compound (a1) with a polyol (a2) having an ester bond wherein the isocyanate compound (a1) comprises at least one compound selected from aliphatic isocyanates and alicyclic isocyanates and the polyol (a2) comprises both a polyester polyol (a2 1) and an acrylic polyol (a2 2). The adhesive agent has excellent initial adhesion properties exhibits excellent adhesion properties after being cured and can be cured into a coating film having excellent flexibility. When the adhesive agent additionally contains a hydroxyphenyltriazine type compound the adhesive agent can rarely undergo the change in color and can have superior weather resistance.

No. of Pages : 60 No. of Claims : 6

(12) PATENT APPLICATION PUBLICATION
(19) INDIA
(22) Date of filing of Application :02/07/2013
(21) Application No.5190/CHENP/2013 A
(43) Publication Date : 05/09/2014

(54) Title of the invention : ORAL HYGIENE APPLIANCE WITH FORMABLE SUBSTRATE

(51) International classification :A61C17/34,A61C17/22
(31) Priority Document No :61/422414
(32) Priority Date :13/12/2010
(33) Name of priority country :U.S.A.
(86) International Application No :PCT/IB2011/055566
Filing Date :09/12/2011
(87) International Publication No :WO 2012/080919
(61) Patent of Addition to Application Number :NA
Filing Date :NA
(62) Divisional to Application Number :NA
Filing Date :NA

(71)**Name of Applicant :**
1)KONINKLIJKE PHILIPS ELECTRONICS N.V.
Address of Applicant :High Tech Campus 5 NL 5656 AE Eindhoven Netherlands
(72)**Name of Inventor :**
1)MILLER Kevin A.
2)HEADSTROM Patrick A.
3)JOHNSON Bethany Joyce
4)BLANCH Ian Gordon
5)HUTTENHUIS Tijn Pieter Lodewijk

(57) Abstract :
The power appliance (10) for cleaning teeth includes a drive system (16) and a substrate (10) for supporting a field of bristles (14) which contact teeth for cleaning. The drive system is connected to the substrate moving the substrate in operation to produce an action of the bristle field against the teeth. The assembly which includes internal stiffeners (60 62 64) in one embodiment has two physical states including a first state in which the substrate is softened so as to be formable to conform to the geometry of the teeth and a second hardened state following its conformance to the teeth in which the substrate is sufficiently rigid to effectively transmit a driving motion to the bristles.

No. of Pages : 14 No. of Claims : 16

(12) PATENT APPLICATION PUBLICATION
(19) INDIA
(22) Date of filing of Application :02/07/2013
(21) Application No.5192/CHENP/2013 A
(43) Publication Date : 05/09/2014

(54) Title of the invention : APPARATUS AND METHOD FOR INFLUENCING AND/OR DETECTING MAGNETIC PARTICLES

(51) International classification :A61B5/05
(31) Priority Document No :10194503.8
(32) Priority Date :10/12/2010
(33) Name of priority country :EPO
(86) International Application No :PCT/IB2011/055456
Filing Date :05/12/2011
(87) International Publication No :WO 2012/077035
(61) Patent of Addition to Application Number :NA
Filing Date :NA
(62) Divisional to Application Number :NA
Filing Date :NA

(71)**Name of Applicant :**
1)KONINKLIJKE PHILIPS ELECTRONICS N.V.
Address of Applicant :High Tech Campus 5 NL 5656 AE Eindhoven Netherlands
2)PHILIPS INTELLECTUAL PROPERTY & STANDARDS GMBH
(72)**Name of Inventor :**
1)BONTUS Claas
2)GLEICH Bernhard

(57) Abstract :
The present invention relates to an apparatus and a method for influencing and/or detecting magnetic particles in a field of view (28) in particular for magnetic particle imaging (MPI). The proposed apparatus comprises selection means for generating a magnetic selection field (50) and drive means for generating a magnetic drive field for moving a field free point along a predetermined trajectory through the field of view so that the magnetization of the magnetic material changes locally. According to the present invention a time dependent oscillating drive field current is provided per drive field coil for driving the respective drive field coil each drive field current having one or more individual oscillating frequencies and one or more individual current amplitudes and being generated by a corresponding drive field voltage per drive field coil (136a 136b 136c) each drive field voltage being generated by a superposition of a number of drive field voltage components including a drive field voltage component per drive field coil wherein a drive field voltage component corresponding to a particular drive field coil comprises one or more sub¬ components a sub component having an individual voltage amplitude and having the same individual oscillating frequency as the respective drive field current of said particular drive field coil.

No. of Pages : 36 No. of Claims : 17

(12) PATENT APPLICATION PUBLICATION
(19) INDIA
(22) Date of filing of Application :29/05/2013
(21) Application No.4138/CHENP/2013 A
(43) Publication Date : 05/09/2014

(54) Title of the invention : TECHNIQUE FOR MANAGING TRAFFIC AT A ROUTER

(51) International classification :H04L12/56
(31) Priority Document No :12/960935
(32) Priority Date :06/12/2010
(33) Name of priority country :U.S.A.
(86) International Application No :PCT/US2011/063428
Filing Date :06/12/2011
(87) International Publication No :WO 2012/078575
(61) Patent of Addition to Application Number :NA
Filing Date :NA
(62) Divisional to Application Number :NA
Filing Date :NA

(71)**Name of Applicant :**
1)QUALCOMM INCORPORATED
Address of Applicant :5775 Morehouse Drive San Diego CA 92121 U.S.A.
(72)**Name of Inventor :**
1)MENCHACA Benjamin M.
2)DUNLAP Wayne G.

(57) Abstract :
A router of a network is configured to manage routing of packets based on executing applications. The network communicates packets of information between endpoints coupled to the network. Each packet is assigned to a traffic class based on the application associated with the packet. The router manages routing of received packets based on the traffic classes associated with the received packets. Accordingly the router can determine routing priority bandwidth acknowledgment policy and other routing management information based on the applications associated with received packets.

No. of Pages : 28 No. of Claims : 21

(12) PATENT APPLICATION PUBLICATION
(19) INDIA
(22) Date of filing of Application :17/06/2013
(21) Application No.4639/CHENP/2013 A
(43) Publication Date : 05/09/2014

(54) Title of the invention : WIRELESS ENERGY TRANSFER AND CONTINUOUS RADIO STATION SIGNAL COEXISTENCE

(51) International classification :H04B5/00
(31) Priority Document No :61/423779
(32) Priority Date :16/12/2010
(33) Name of priority country :U.S.A.
(86) International Application No :PCT/US2011/064838
Filing Date :14/12/2011
(87) International Publication No :WO 2012/082858
(61) Patent of Addition to Application Number :NA
Filing Date :NA
(62) Divisional to Application Number :NA
Filing Date :NA

(71)**Name of Applicant :**
1)QUALCOMM INCORPORATED
Address of Applicant :5775 Morehouse Drive San Diego California 92121 U.S.A.
(72)**Name of Inventor :**
1)WIDMER Hanspeter

(57) Abstract :
This disclosure provides systems methods and apparatus for wirelessly transmitting power while avoiding interference with wireless communication devices. In one aspect a wireless power transmitter apparatus is provided. The wireless power transmitter apparatus includes a transmit circuit configured to wirelessly transmit power at a transmit frequency to a first receiver device. The wireless power transmitter apparatus further includes a controller circuit configured to reduce a level of emission of the transmit circuit at a determined frequency during a period of time based on information about an information signal transmitted to a second receiver device substantially at the determined frequency to be received within the period of time.

No. of Pages : 55 No. of Claims : 52

(12) PATENT APPLICATION PUBLICATION
(19) INDIA
(22) Date of filing of Application :17/06/2013
(21) Application No.4640/CHENP/2013 A
(43) Publication Date : 05/09/2014

(54) Title of the invention : PROCESSING APPARATUS TRACE UNIT AND DIAGNOSTIC APPARATUS

(51) International classification :G06F9/38,G06F11/34,G06F11/36
(31) Priority Document No :1100505.5
(32) Priority Date :13/01/2011
(33) Name of priority country :U.K.
(86) International Application No :PCT/GB2011/052353
Filing Date :29/11/2011
(87) International Publication No :WO 2012/095619
(61) Patent of Addition to Application Number :NA
Filing Date :NA
(62) Divisional to Application Number :NA
Filing Date :NA

(71)**Name of Applicant :**
1)ARM LIMITED
Address of Applicant :110 Fulbourn Road Cherry Hinton Cambridge CB1 9NJ U.K.
(72)**Name of Inventor :**
1)HORLEY John
2)CRASKE Simon
3)GIBBS Michael
4)GILKERSON Paul

(57) Abstract :
A processing circuit (4) is responsive to at least one conditional instruction to perform a conditional operation in dependence on a current value of a subset of at least one condition flag (22). A trace circuit (6) is provided for generating trace data elements indicative of operations performed by the processing circuit (4). When the processing circuit (4) processes at least one selected instruction then the trace circuit (6) generates a trace data element including a traced condition value indicating at least the subset of condition flags (22) required to determine the outcome of the conditional instruction. A corresponding diagnostic apparatus (12) uses the traced condition value to determine a processing outcome of the at least one conditional instruction.

No. of Pages : 59 No. of Claims : 38

(12) PATENT APPLICATION PUBLICATION
(21) Application No.5183/CHENP/2013 A
(19) INDIA
(22) Date of filing of Application :02/07/2013
(43) Publication Date : 05/09/2014

(54) Title of the invention : ADJUSTING MEASUREMENTS OF THE EFFECTS OF ACOUSTIC RADIATION FORCE FOR BACKGROUND MOTION EFFECTS

(51) International classification :A61B8/00,G01S7/52
(31) Priority Document No :61/422479
(32) Priority Date :13/12/2010
(33) Name of priority country :U.S.A.
(86) International Application No :PCT/IB2011/055546
Filing Date :08/12/2011
(87) International Publication No :WO 2012/080913
(61) Patent of Addition to Application Number :NA
Filing Date :NA
(62) Divisional to Application Number :NA
Filing Date :NA

(71)**Name of Applicant :**
1)KONINKLIJKE PHILIPS ELECTRONICS N.V.
Address of Applicant :High Tech Campus 5 NL 5656 AE Eindhoven Netherlands
(72)**Name of Inventor :**
1)FRASER John Douglas
2)XIE Hua

(57) Abstract :
An ultrasonic diagnostic imaging system for shear wave measurement transmits push pulses into tissue for the generation of shear waves. Characteristics of the shear waves such as their velocity of passage through the tissue are measured to assess properties such as tissue stiffness. The measurements are compensated for effects of background motion by sampling echo signals from the tissue at different times and comparing the samples to detect the presence of relative motion between the ultrasound probe and the region of interest where shear waves are detected. Sensed background motion is used to adjust measured shear wave characteristics.

No. of Pages : 31 No. of Claims : 15

(12) PATENT APPLICATION PUBLICATION
(19) INDIA
(22) Date of filing of Application :02/07/2013
(21) Application No.5189/CHENP/2013 A
(43) Publication Date : 05/09/2014

(54) Title of the invention : HEADGEAR STRAP MEMBERS WITH ENHANCED COMFORT

(51) International classification :A61M16/06
(31) Priority Document No :61/422243
(32) Priority Date :13/12/2010
(33) Name of priority country :U.S.A.
(86) International Application No :PCT/IB2011/055355
Filing Date :29/11/2011
(87) International Publication No :WO 2012/080887
(61) Patent of Addition to Application Number :NA
Filing Date :NA
(62) Divisional to Application Number :NA
Filing Date :NA

(71)**Name of Applicant :**
1)KONINKLIJKE PHILIPS ELECTRONICS N.V.
Address of Applicant :High Tech Campus 5 NL 5656 AE Eindhoven Netherlands
(72)**Name of Inventor :**
1)HO Peter Chi Fai
2)MATULA Jerome Jr.

(57) Abstract :
A strap member for use in securing a mask to the head of a patient includes a strap portion formed from a first material. The first material comprises a silicone material. The strap member further includes a breathability enhancing element associated with the strap portion.

No. of Pages : 21 No. of Claims : 13

(12) PATENT APPLICATION PUBLICATION
(21) Application No.1080/CHENP/2013 A
(19) INDIA
(22) Date of filing of Application :08/02/2013
(43) Publication Date : 05/09/2014

(54) Title of the invention : CHECK VALVE AND LIQUID FEEDING PUMP

(51) International classification :F16K15/04,F04B53/10
(31) Priority Document No :NA
(32) Priority Date :NA
(33) Name of priority country :NA
(86) International Application No :PCT/JP2010/064045
Filing Date :20/08/2010
(87) International Publication No :WO 2012/023201
(61) Patent of Addition to Application Number :NA
Filing Date :NA
(62) Divisional to Application Number :NA
Filing Date :NA

(71)**Name of Applicant :**
1)SHIMADZU CORPORATION
Address of Applicant :1 Nishinokyo kuwabaracho Nakagyo ku Kyoto shi Kyoto 6048511 Japan
(72)**Name of Inventor :**
1)ASOU Yoshiaki

(57) Abstract :
A valve chamber is provided inside a valve element including a liquid inlet and a liquid outlet at positions facing each other. Inside the valve chamber, a ball is disposed to be movable in a direction of a straight line connecting the liquid inlet and the liquid outlet. A ball seat is fitted in the liquid inlet portion of the valve element. The ball seat includes a flow path forming the liquid inlet inside itself and allows the ball to be seated at an edge portion of the flow path. The ball seat is made of material having a hexagonal crystal structure and formed while controlling an orientation of a crystal axis so that a C axis which is the crystal axis of the material is oriented in the same direction as a central axis of the flow path forming the liquid inlet.

No. of Pages : 26 No. of Claims : 3

(12) PATENT APPLICATION PUBLICATION
(21) Application No.218/CHE/2012 A
(19) INDIA
(22) Date of filing of Application :19/01/2012
(43) Publication Date : 05/09/2014

(54) Title of the invention : CABLE TYPE SPEED GOVERNOR SYSTEM WITH STEPPER MOTOR

(51) International classification :H02P
(31) Priority Document No :NA
(32) Priority Date :NA
(33) Name of priority country :NA
(86) International Application No :NA
Filing Date :NA
(87) International Publication No : NA
(61) Patent of Addition to Application Number :NA
Filing Date :NA
(62) Divisional to Application Number :NA
Filing Date :NA

(71)**Name of Applicant :**
1)NOBY E A
Address of Applicant :ERALIL HOUSE, LPS ROAD, PALLINADA, PALARIVATTOM, P.O., KOCHI - 682 025 Kerala India
(72)**Name of Inventor :**
1)NOBY E A

(57) Abstract :
The various embodiments of the invention provide a cable type speed regulator system and method with a stepper motor assembly for regulating the speed of the vehicles and enabling the vehicle operation with limited speed under limp modes. The cable type speed governor systems are generally used in vehicle having mechanical linkage to control the speed of the vehicle and fitted between the accelerator pedal and the fuel injection system. The present inventions aims at providing speed controller operation, cruise controller operation and limp mode operation on a conventional cable type speed governor system. The present invention also provides a limp mode operation wherein the vehicle operates in a very limited speed irrespective of the accelerator pedal being pressed. The speed achievable under limp mode is set dynamically by the engine control unit and the limp mode is activated when the speed regulator system is tampered or any actions that make the speed controller work abnormal.

No. of Pages : 36 No. of Claims : 14

(12) PATENT APPLICATION PUBLICATION
(19) INDIA
(22) Date of filing of Application :19/06/2013
(21) Application No.4755/CHENP/2013 A
(43) Publication Date : 05/09/2014

(54) Title of the invention : METAL RESIN COMPLEX AND PROCESS FOR PRODUCTION THEREOF

(51) International classification :B29C45/14,C23F1/36,H01M2/04
(31) Priority Document No :2010263235
(32) Priority Date :26/11/2010
(33) Name of priority country :Japan
(86) International Application No :PCT/JP2011/077221
Filing Date :25/11/2011
(87) International Publication No :WO 2012/070654
(61) Patent of Addition to Application Number :NA
Filing Date :NA
(62) Divisional to Application Number :NA
Filing Date :NA

(71)**Name of Applicant :**
1)TAISEI PLAS CO. LTD.
Address of Applicant :11 8 Nihonbashi hamacho 1 chome Chuo ku Tokyo 1030007 Japan
(72)**Name of Inventor :**
1)NARITOMI Masanori
2)ANDOH Naoki

(57) Abstract :
A metal-resin composite having high gas sealing properties is provided. An aluminum alloy structure having a shape surrounding the copper 63 is firstly formed, and the attached aluminum alloy is made closely contact with the copper electrode 63 and further made engaged into the copper electrode 63 by pressing or forging. It is then machined into a predetermined shape so as to prepare the copper alloy 63 attached with an aluminum alloy part 61a. Subsequently, the surface treatment of the NMT or NMT 2 is given to three members of an aluminum electrode 62, the copper electrode 63 attached with the aluminum alloy part 61a and an aluminum alloy lid 61. These three members are inserted into an injection mold, and a thermoplastic resin composition 64 of PPS resin is injected. The lithium-ion battery lid 6 0 having a structure as shown in

No. of Pages : 76 No. of Claims : 5

(12) PATENT APPLICATION PUBLICATION
(19) INDIA
(22) Date of filing of Application :03/07/2013
(21) Application No.5200/CHENP/2013 A
(43) Publication Date : 05/09/2014

(54) Title of the invention : DEVICE FOR INJECTING ADJUSTABLE DOSES OF LIQUID DRUG

(51) International classification :A61M5/315
(31) Priority Document No :10197269.3
(32) Priority Date :29/12/2010
(33) Name of priority country :EPO
(86) International Application No :PCT/EP2011/073775
Filing Date :22/12/2011
(87) International Publication No :WO 2012/089616
(61) Patent of Addition to Application Number :NA
Filing Date :NA
(62) Divisional to Application Number :NA
Filing Date :NA

(71)**Name of Applicant :**
1)NOVO NORDISK A/S
Address of Applicant :Novo All DK 2880 Bagsv¦rd Denmark
(72)**Name of Inventor :**
1)RADMER Bo
2)ENGGAARD Christian Peter
3)MOURIDSEN Brian
4)PETERSEN Michael Frank
5)NIELSEN Lars Ulrik

(57) Abstract :
The present invention relates to an injection device for administering doses of liquid drug. The injection device comprises a user operable dose adjustment structure configured to adjust in a prepared state of the device a dose of liquid drug of a first size to set a dose of a second size. The present injection device is particularly suitable for self injection of liquid drugs such as insulin for treating diabetes by the user or patient.

No. of Pages : 43 No. of Claims : 15

(12) PATENT APPLICATION PUBLICATION
(19) INDIA
(22) Date of filing of Application :06/05/2013
(21) Application No.3545/CHENP/2013 A
(43) Publication Date : 05/09/2014

(54) Title of the invention : HYDRODYNAMIC TUMBLE DISC BEARING SYSTEM

(51) International classification :F16C23/04
(31) Priority Document No :10190103.1
(32) Priority Date :05/11/2010
(33) Name of priority country :EPO
(86) International Application No :PCT/IB2011/053308
Filing Date :25/07/2011
(87) International Publication No :WO 2012/059824
(61) Patent of Addition to Application Number :NA
Filing Date :NA
(62) Divisional to Application Number :NA
Filing Date :NA

(71)**Name of Applicant :**
1)KONINKLIJKE PHILIPS ELECTRONICS N.V.
Address of Applicant :High Tech Campus 5 NL 5656 AE Eindhoven Netherlands
2)PHILIPS INTELLECTUAL PROPERTY & STANDARDS GMBH
(72)**Name of Inventor :**
1)ONKEN Volker
2)POTZE Willem
3)WASSINK Bernardus Wilhelmus Johannes

(57) Abstract :
The invention relates to a tumble disc bearing (100) to provide an efficient axial bearing for a rotating anode (216) of an X ray source (212) having a tumble disc (102) for axially bearing the rotating anode (216) and a mounting component (120) for supporting the tumble disc (102). The mounting component (120) comprises an inner mounting face (122) for attaching to a supporting structure (194 204). The mounting component (120) is supported in the tumble disc (102) at a tumble position (140) in which an inner supporting face (104) of the tumble disc (102) matches an outer supporting face (124) of the mounting component (120) such that the tumble disc (102) is enabled to perform a tumble motion in all directions in relation to the mounting component (120). The mounting component (120) is adapted to be inserted in an inserting position (142) traverse to the tumble position (140) into the tumble disc (102). At least one recess (110 610) at the tumble disc (102) is provided for inserting at least one catch (150 650) in an axial direction (160) of an anode rotation axis (162) and for engaging with the at least one catch (150 650) to fixate the tumble disc (102) against a rotational movement (164) in relation to the support structure (194 204) while maintaining the tumble motion of the tumble disc (102).

No. of Pages : 46 No. of Claims : 16

(12) PATENT APPLICATION PUBLICATION
(19) INDIA
(22) Date of filing of Application :06/05/2013
(21) Application No.3546/CHENP/2013 A
(43) Publication Date : 05/09/2014

(54) Title of the invention : DRIVER DEVICE AND DRIVING METHOD FOR DRIVING A LOAD IN PARTICULAR AN LED UNIT

(51) International classification :G09G
(31) Priority Document No :10189759.3
(32) Priority Date :03/11/2010
(33) Name of priority country :EPO
(86) International Application No :PCT/IB2011/054825
Filing Date :31/10/2011
(87) International Publication No :WO 2012/059853
(61) Patent of Addition to Application Number :NA
Filing Date :NA
(62) Divisional to Application Number :NA
Filing Date :NA

(71)**Name of Applicant :**
1)KONINKLIJKE PHILIPS ELECTRONICS N.V.
Address of Applicant :High Tech Campus 5 NL 5656 AE Eindhoven Netherlands
2)PHILIPS INTELLECTUAL PROPERTY & STANDARDS GMBH
(72)**Name of Inventor :**
1)LOP‰Z Toni
2)ELFERICH Reinhold

(57) Abstract :
The present invention relates to a driver device (50a 50e)and a corresponding driving method for driving a load (22) in particular an LED unit comprising a power input unit (52) for receiving an input voltage (V20) from an external power supply and for providing a rectified supply voltage(V52) a power conversion unit(54)for converting said supply voltage (V52) to a load current (I54) for powering the load (22) a charge capacitor (56) for storing a charge and powering the load (22) when insufficient energy for powering the load (22) and/or the power conversion unit (54) is drawn from said external power supply (20) at a given time and a control unit (58) for controlling the charging of said charge capacitor(56) by said supply voltage (V52) to a capacitor voltage (V56) that can be substantially higher than the peak voltage (V52) of said supply voltage and for powering the load(22).

No. of Pages : 22 No. of Claims : 14

(12) PATENT APPLICATION PUBLICATION
(21) Application No.4432/CHENP/2013 A
(19) INDIA
(22) Date of filing of Application :10/06/2013
(43) Publication Date : 05/09/2014

(54) Title of the invention : HYBRID LIGHT GUIDE WITH FACETED AND HOLOGRAPHIC LIGHT TURNING FEATURES

(51) International classification :G02B6/00,G02B5/32
(31) Priority Document No :12/948572
(32) Priority Date :17/11/2010
(33) Name of priority country :U.S.A.
(86) International Application No :PCT/US2011/059062
Filing Date :03/11/2011
(87) International Publication No :WO 2012/067838
(61) Patent of Addition to Application Number :NA
Filing Date :NA
(62) Divisional to Application Number :NA
Filing Date :NA

(71)**Name of Applicant :**
1)QUALCOMM MEMS TECHNOLOGIES INC.
Address of Applicant :5775 Morehouse Drive San Diego CA 92121 U.S.A.
(72)**Name of Inventor :**
1)GRUHLKE Russell Wayne
2)LI Kebin

(57) Abstract :
The present disclosure provides systems methods and apparatus to illuminate displays. In one aspect an illumination device with a light guide can include both faceted and holographic light turning features. The holographic light turning features can be provided between the facets. The facets can eject light out of the light guide. The holographic light turning features also can eject light out of the light guide or can collimate the light so that it propagates more nearly parallel to the major surfaces of the light guide or both eject and collimate light. The ejected light can be used to illuminate a display.

No. of Pages : 50 No. of Claims : 36

(12) PATENT APPLICATION PUBLICATION
(19) INDIA
(22) Date of filing of Application :04/07/2013
(21) Application No.5268/CHENP/2013 A
(43) Publication Date : 05/09/2014

(54) Title of the invention : USER INPUT BACK CHANNEL FOR WIRELESS DISPLAYS

(51) International classification :G06F3/03,H04L29/06
(31) Priority Document No :61/435194
(32) Priority Date :21/01/2011
(33) Name of priority country :U.S.A.
(86) International Application No :PCT/US2012/022076
Filing Date :20/01/2012
(87) International Publication No :WO 2012/100193
(61) Patent of Addition to Application Number :NA
Filing Date :NA
(62) Divisional to Application Number :NA
Filing Date :NA

(71)**Name of Applicant :**
1)QUALCOMM INCORPORATED
Address of Applicant :Attn: International Ip Administration 5775 Morehouse Drive San Diego California 92121 U.S.A.
(72)**Name of Inventor :**
1)HUANG Xiaolong
2)RAVEENDRAN Vijayalakshmi R.
3)WANG Xiaodong
4)SHAUKAT Fawad

(57) Abstract :
As part of a communication session a wireless source device can transmit audio and video data to a wireless sink device and the wireless sink device can transmit user input data received at the wireless sink device back to the wireless source device. In this manner a user of the wireless sink device can control the wireless source device and control the content that is being transmitted from the wireless source device to the wireless sink device.

No. of Pages : 76 No. of Claims : 94

(12) PATENT APPLICATION PUBLICATION
(19) INDIA
(22) Date of filing of Application :20/03/2013
(21) Application No.2240/CHENP/2013 A
(43) Publication Date : 05/09/2014

(54) Title of the invention : METHOD FOR FEEDING AN ANTISTATIC COMPOUND TO A POLYMERIZATION REACTOR

(51) International classification :C08F10/00,C08F2/00
(31) Priority Document No :10181234.5
(32) Priority Date :28/09/2010
(33) Name of priority country :EPO
(86) International Application No :PCT/EP2011/066680
Filing Date :26/09/2011
(87) International Publication No :WO 2012/041811
(61) Patent of Addition to Application Number :NA
Filing Date :NA
(62) Divisional to Application Number :NA
Filing Date :NA

(71)**Name of Applicant :**
1)BASELL POLYOLEFINE GMBH
Address of Applicant :Br¼hler Strae 60 50389 Wesseling Germany
(72)**Name of Inventor :**
1)BAITA Pietro
2)FERRARI Paolo
3)MINGOZZI Ines
4)PEDRIALI Lorella
5)DI DIEGO Maria
6)PICA Roberta

(57) Abstract :
A method for feeding an antistatic compound to a polymerization reactor comprising the steps of: a) dispersing under mixing conditions a catalyst powder and an antistatic compound in an oil so as to form a suspension of catalyst powder and antistatic compound in said oil; b) successively adding under mixing conditions a molten thickening agent to said suspension from step a) while maintaining said suspension at a temperature such that said thickening agent solidifies on contact with said suspension; c) transferring the product obtained from b) to a polymerization reactor.

No. of Pages : 24 No. of Claims : 15

(12) PATENT APPLICATION PUBLICATION
(21) Application No.4179/CHENP/2013 A
(19) INDIA
(22) Date of filing of Application :30/05/2013
(43) Publication Date : 05/09/2014

(54) Title of the invention : METHOD FOR PRODUCING N HETEROCYCLIC OPTICALLY ACTIVE ALCOHOLS

(51) International classification :C12P7/22
(31) Priority Document No :10192418.1
(32) Priority Date :24/11/2010
(33) Name of priority country :EPO
(86) International Application No :PCT/EP2011/070607
Filing Date :22/11/2011
(87) International Publication No :WO 2012/069434
(61) Patent of Addition to Application Number :NA
Filing Date :NA
(62) Divisional to Application Number :NA
Filing Date :NA

(71)**Name of Applicant :**
1)BASF SE
Address of Applicant :67056 Ludwigshafen Germany
(72)**Name of Inventor :**
1)SCHNEIDER Nina
2)BONNEKESSEL Melanie
3)BREUER Michael
4)D„UWEL J¼rgen
5)DITRICH Klaus
6)KARL Ulrich
7)ST„B Tobias

(57) Abstract :
Method for producing N heterocyclic optically active alcohols of the formula (I) where R represents alkyl groups which in turn can be monosubstituted or polysubstituted by alkyl halogen SH.SR OH OR NO CN CO COOR NRR or NRRRX where R R and R independently of one another are H or a low alkyl or low alkoxy radical and X is a counterion R is N containing heteroaryl groups which in turn can be monosubstituted or polysubstituted by alkyl halogen SH.SR OH OR NO CN CO COOR NRR or NRRRX where R R and R independently of one another are H or a low alkyl or low alkoxy radical and X is a counterion by reduction of the corresponding ketone wherein the reduction is carried out using a dehydrogenase having the polypeptide sequence SEQ ID NO: 2 or NO: 4 or having a polypeptide sequence in which up to 25% of the amino acid radicals are modified in comparison with SEQ ID NO: 2 or NO: 4 by deletion insertion substitution or a combination thereof.

No. of Pages : 32 No. of Claims : 5

(12) PATENT APPLICATION PUBLICATION
(19) INDIA
(22) Date of filing of Application :09/02/2012
(21) Application No.481/CHE/2012 A
(43) Publication Date : 05/09/2014

(54) Title of the invention : LOLDUVIN - S

(51) International classification :A23J
(31) Priority Document No :NA
(32) Priority Date :NA
(33) Name of priority country :NA
(86) International Application No :NA
Filing Date :NA
(87) International Publication No : NA
(61) Patent of Addition to Application Number :NA
Filing Date :NA
(62) Divisional to Application Number :NA
Filing Date :NA

(71)**Name of Applicant :**
1)DR. A.S. SMILINE GIRJA
Address of Applicant :NO.8/11, ABC SANDHESH APARTMENTS, AYANAVARAM ROAD, CHENNAI 600 023 Tamil Nadu India
(72)**Name of Inventor :**
1)DR. A.S. SMILINE GIRJA

(57) Abstract :
This is the first discovery done in India to isolate and identify a new protein named as Lolduvin-S from the ink of the Indian squid Loligo duvauceli. LOLDUVIN-S: 'Lol' stands for Loligo and 'duvin' stands for a protein from the species of Loligo duvauceli. 'S' stands for the discoverer's [my] name 'SMILINE' This is the first study to design the preliminary protocols for isolation and identification of Lolduvin-S by electrophoresis method. Lolduvin-S was found to possess a molecular weight of 63Kda and has L-amino acid oxidase activity. Lolduvin-S possess various bioactive properties like antibacterial, antifungal, antiviral, antimalarial, immunomodulating, cytotoxic [antitumour] and was found to be biocompatible. Lolduvin-S is cost effective and can be used as novel therapeutic agent from a marine source in the eradication of the drug resistant micro organisms and can be designed as a drug in near future with broad spectrum bio-activity.

No. of Pages : 12 No. of Claims : 10

(12) PATENT APPLICATION PUBLICATION
(19) INDIA
(22) Date of filing of Application :08/07/2013
(21) Application No.5366/CHENP/2013 A
(43) Publication Date : 05/09/2014

(54) Title of the invention : SOLID LIQUID SEPARATION DEVICE

(51) International classification :B30B9/26,B30B9/12
(31) Priority Document No :2011012428
(32) Priority Date :24/01/2011
(33) Name of priority country :Japan
(86) International Application No :PCT/JP2012/000237
Filing Date :17/01/2012
(87) International Publication No :WO 2012/101980
(61) Patent of Addition to Application Number :NA
Filing Date :NA
(62) Divisional to Application Number :NA
Filing Date :NA

(71)**Name of Applicant :**
1)AMUKON KABUSHIKI KAISHA
Address of Applicant :1926 Nippa cho Kohoku ku Yokohama shi Kanagawa 2230057 Japan
(72)**Name of Inventor :**
1)KANEKO Kazuo
2)TEZUKA Yusuke
3)NAKAMURA Yoshitaka
4)KADOWAKI Yuki
5)KOBAYASHI Hirokazu

(57) Abstract :
A solid liquid separation device includes a plurality of fixed members and movable members that are movably disposed between the adjacent fixed members and moreover a screw extending through the fixed members and the movable members in a state where the screw is not in contact with the fixed members and the movable members. The screw is rotationally driven about a center axis line thereof. Following the rotation of the screw an object to be treated that has penetrated into a solid liquid separation portion demarcated by the fixed members and the movable members is caused to move toward an outlet of the solid liquid separation portion a filtrate separated from the object is discharged to the outside of the solid liquid separation portion through filtrate discharge gaps between the fixed members and the movable members and the object that has a reduced liquid content ratio is discharged from the outlet to the outside of the solid liquid separation portion. In order to increase significantly a dewatering ratio of the object the movable members are formed to move while penetrating closer to the center axis line of the screw than an outer circumferential edge of the blade of the screw without coming into contact with the screw.

No. of Pages : 101 No. of Claims : 11

(12) PATENT APPLICATION PUBLICATION
(19) INDIA
(22) Date of filing of Application :05/07/2013
(21) Application No.5292/CHENP/2013 A
(43) Publication Date : 05/09/2014

(54) Title of the invention : METHOD AND APPARATUS FOR PROVIDING CONTEXT BASED COUPON SHARING

(51) International classification :G06Q30/00
(31) Priority Document No :NA
(32) Priority Date :NA
(33) Name of priority country :NA
(86) International Application No :PCT/CN2010/079667
Filing Date :10/12/2010
(87) International Publication No :WO 2012/075643
(61) Patent of Addition to Application Number :NA
Filing Date :NA
(62) Divisional to Application Number :NA
Filing Date :NA

(71)**Name of Applicant :**
1)NOKIA CORPORATION
Address of Applicant :Keilalahdentie 4 FI 02150 Espoo Finland
(72)**Name of Inventor :**
1)LIU Dong
2)LI Jiang
3)YANG Hao
4)SONG Zhanjiang

(57) Abstract :
An approach is provided for context based coupon sharing. A coupon management platform receives a request specifying an exchange of one or more coupons. The request includes at least in part one or more attribute condition pairs associated with the one or more coupons one or more participants of the exchange or a combination thereof. The coupon management platform determines context data associated with a first user at least one device associated with the first user at least one second user at least one other device associated with the at least one second user or a combination thereof. The coupon management platform then causes at least in part processing of the one or more attribute condition pairs the context data or a combination thereof for initiating the exchange between the first user and the at least one second user.

No. of Pages : 59 No. of Claims : 59

(12) PATENT APPLICATION PUBLICATION
(19) INDIA
(22) Date of filing of Application :08/07/2013
(21) Application No.5402/CHENP/2013 A
(43) Publication Date : 05/09/2014

(54) Title of the invention : SUBSTITUTED PYRIDINES HAVING HERBICIDAL ACTIVITY

(51) International classification :C07D495/04,A01N43/60
(31) Priority Document No :61/426523
(32) Priority Date :23/12/2010
(33) Name of priority country :U.S.A.
(86) International Application No :PCT/EP2011/073157
Filing Date :19/12/2011
(87) International Publication No :WO 2012/084755
(61) Patent of Addition to Application Number :NA
Filing Date :NA
(62) Divisional to Application Number :NA
Filing Date :NA

(71)**Name of Applicant :**
1)BASF SE
Address of Applicant :67056 Ludwigshafen Germany
(72)**Name of Inventor :**
1)WITSCHEL Matthias
2)MOBERG William Karl
3)PARRA RAPADO Liliana
4)BESONG Gilbert
5)RACK Michael
6)KLOET Andree van der
7)SEITZ Thomas
8)REINGRUBER R¼diger
9)KRAUS Helmut
10)HUTZLER Johannes
11)NEWTON Trevor William
12)LERCHL Jens
13)KREUZ Klaus
14)GROSSMANN Klaus
15)EVANS Richard Roger

(57) Abstract :
The present invention provides substituted pyridine compounds of the formula (I) or N oxides or agriculturally suitable salts thereof wherein the variables in the formula (I) are defined as in the description. Substituted pyridines of formula I are useful as herbicides.

No. of Pages : 160 No. of Claims : 15

(12) PATENT APPLICATION PUBLICATION
(19) INDIA
(22) Date of filing of Application :08/07/2013
(21) Application No.5403/CHENP/2013 A
(43) Publication Date : 05/09/2014

(54) Title of the invention : PROCESSES FOR THE PRODUCTION OF ETHYLENE GLYCOL

(51) International classification :C07C29/09,C07C29/12,C07C29/64
(31) Priority Document No :11152780.0
(32) Priority Date :31/01/2011
(33) Name of priority country :EPO
(86) International Application No :PCT/EP2012/051450
Filing Date :30/01/2012
(87) International Publication No :WO 2012/104252
(61) Patent of Addition to Application Number :NA
Filing Date :NA
(62) Divisional to Application Number :NA
Filing Date :NA

(71)**Name of Applicant :**
1)SHELL INTERNATIONALE RESEARCH MAATSCHAPPIJ B.V.
Address of Applicant :Carel van Bylandtlaan 30 NL 2596 HR The Hague Netherlands
(72)**Name of Inventor :**
1)VAN OGTROP Jan
2)SMAARDIJK Abraham Adriaan
3)STICHTER Hendrik

(57) Abstract :
The invention provides a process for the production of ethylene glycol comprising the steps of: (i) supplying ethylene and oxygen and an organic chloride moderator to an ethylene oxide reactor wherein ethylene and oxygen react in the presence of a catalyst to produce ethylene oxide thereby producing a reactor product stream; (ii) supplying the reactor product stream to an ethylene oxide absorber wherein ethylene oxide is recovered from the reactor product stream by absorption in water in the absorber section thereby producing a fat absorbent stream; (iii) supplying the fat absorbent stream to an ethylene oxide stripper wherein the fat absorbent stream is steam stripped thereby producing a concentrated ethylene oxide stream and a lean absorbent stream; (iv) recirculating the lean absorbent stream to the ethylene oxide absorber; (v) optionally supplying the concentrated ethylene oxide stream to one or more carboxylation reactors wherein ethylene oxide reacts with carbon dioxide to form an ethylene carbonate stream; and (vi) supplying the concentrated ethylene oxide stream and/or the ethylene carbonate stream to one or more hydrolysis reactors wherein ethylene oxide and/or ethylene carbonate reacts with water in the presence of a hydrolysis catalyst selected from one or more basic alkali metal salts to form an ethylene glycol stream; wherein the process comprises the additional steps of: (vii) removing a glycol bleed stream from the ethylene oxide stripper; and (viii) adding a base to the ethylene oxide stripper such that the pH in the bottom section of the stripper i maintained in the range of from at least 9.5 to at most 12.0.

No. of Pages : 17 No. of Claims : 9

(12) PATENT APPLICATION PUBLICATION
(19) INDIA
(22) Date of filing of Application :08/07/2013
(21) Application No.5404/CHENP/2013 A
(43) Publication Date : 05/09/2014

(54) Title of the invention : BITUMINOUS COMPOSITION WITH REDUCED EMISSION OF HYDROGEN SULFIDE

(51) International classification :C08K5/3415,C08K13/02,C08L95/00
(31) Priority Document No :PCT/IN2010/000838
(32) Priority Date :21/12/2010
(33) Name of priority country :India
(86) International Application No :PCT/EP2011/073220
Filing Date :19/12/2011
(87) International Publication No :WO 2012/084808
(61) Patent of Addition to Application Number :NA
Filing Date :NA
(62) Divisional to Application Number :NA
Filing Date :NA

(71)**Name of Applicant :**
1)SHELL INTERNATIONALE RESEARCH MAATSCHAPPIJ B.V.
Address of Applicant :Carel van Bylandtlaan 30 NL 2596 HR The Hague Netherlands
(72)**Name of Inventor :**
1)ASHTEKAR Sunil
2)NARAYANAN Sathya

(57) Abstract :
The present invention relates to a bituminous composition comprising from 20 wt% to 99.9 wt% of bitumen from 0.01 wt% to 10 wt% of a maleimide compound and from 0.5 to 75 wt% of sulphur by weight of the bituminous composition. The present invention also relates to an asphalt composition comprising said bituminous composition and filler and/or aggregate. The bituminous and asphalt compositions of the present invention exhibit significantly reduced HS emissions.

No. of Pages : 20 No. of Claims : 8

(12) PATENT APPLICATION PUBLICATION
(19) INDIA
(22) Date of filing of Application :10/06/2013
(21) Application No.4421/CHENP/2013 A
(43) Publication Date : 05/09/2014

(54) Title of the invention : EFFICIENTLY HANDLING LARGE DATA SETS ON MOBILE DEVICES

(51) International classification :G06F3/048,G06F3/14,H04W88/02
(31) Priority Document No :12/973814
(32) Priority Date :20/12/2010
(33) Name of priority country :U.S.A.
(86) International Application No :PCT/US2011/065452
Filing Date :16/12/2011
(87) International Publication No :WO 2012/087809
(61) Patent of Addition to Application Number :NA
Filing Date :NA
(62) Divisional to Application Number :NA
Filing Date :NA

(71)**Name of Applicant :**
1)SYBASE INC.
Address of Applicant :One Sybase Drive Building A. Sixth Floor Dublin CA 94568 U.S.A.
(72)**Name of Inventor :**
1)SETHI Raman

(57) Abstract :
A system method and computer program product are provided for efficiently fetching and displaying large datasets on mobile devices such as devices running the iPhone„ operating system. The method fetches data for a mobile device from a server and displays a plurality of data rows in a ListView within a user interface on the mobile device. The method stores primary keys on the mobile device until their corresponding data rows are to be displayed. The method reacts to user inputs such as scrolling actions and touch screen gestures to efficiently fetch and display list view subsets of large datasets. The method facilitates quick response times when navigating through large lists of data on a mobile device by: fetching displayable or visible rows of data in a data list view preloading the visible rows on the mobile device; and binding the visible rows to user interface elements on the mobile device.

No. of Pages : 44 No. of Claims : 20

(12) PATENT APPLICATION PUBLICATION
(19) INDIA
(22) Date of filing of Application :10/06/2013
(21) Application No.4422/CHENP/2013 A
(43) Publication Date : 05/09/2014

(54) Title of the invention : METHOD AND DEVICE FOR BROADCASTING DOMAIN DIVISION TIME DIVISION PACKET

(51) International classification :H04L12/18
(31) Priority Document No :201010580696.1
(32) Priority Date :09/12/2010
(33) Name of priority country :China
(86) International Application No :PCT/CN2011/079837
Filing Date :19/09/2011
(87) International Publication No :WO 2012/075846
(61) Patent of Addition to Application Number :NA
Filing Date :NA
(62) Divisional to Application Number :NA
Filing Date :NA

(71)**Name of Applicant :**
1)ZTE CORPORATION
Address of Applicant :ZTE Plaza Keji Road South Hi Tech Industrial Park Nanshan District Shenzhen Guangdong 518057 China
(72)**Name of Inventor :**
1)LI Xiaoli

(57) Abstract :
Disclosed are a method and a device for broadcasting a domain division time division packet. The method comprises: a switching apparatus setting identifiers for paths in a domain; and after receiving a packet from one path the switching apparatus broadcasting the packet by using a path with an identifier different from the identifier of the path. The present invention solves the problem of packet blocking caused by domain division time division thereby achieving an effect of normally broadcasting the packet.

No. of Pages : 25 No. of Claims : 10

(12) PATENT APPLICATION PUBLICATION
(19) INDIA
(22) Date of filing of Application :02/07/2013
(21) Application No.5182/CHENP/2013 A
(43) Publication Date : 05/09/2014

(54) Title of the invention : COLLIMATOR ARRANGEMENT AND METHOD

(51) International classification :A61B6/06,G21K1/02,G21K1/04
(31) Priority Document No :10513075
(32) Priority Date :13/12/2010
(33) Name of priority country :Sweden
(86) International Application No :PCT/EP2011/068501
Filing Date :24/10/2011
(87) International Publication No :WO 2012/079814
(61) Patent of Addition to Application Number :NA
Filing Date :NA
(62) Divisional to Application Number :NA
Filing Date :NA

(71)**Name of Applicant :**
1)PHILIPS DIGITAL MAMMOGRAPHY SWEDEN AB
Address of Applicant :Smidesvgen 5 S 171 41 Solna Sweden
(72)**Name of Inventor :**
1)S„LL Daniel
2)WAHLBERG Markus
3)DANIELSSON Mats
4)HJ„RN Torbjrn

(57) Abstract :
The present invention relates to a method and an X ray apparatus comprising an X ray source an x ray detector and at least a first collimator having a first active position and a second collimator having a second active position for forming a bundle of X ray beams wherein both of said active positions are located in a substantially straight path between said X ray source and said detector but at different distances from said X ray source. The X ray apparatus further comprises a selector arrangement for switching one of said first or second collimators in said first or second active position whereby when one of said first or second collimators is in an active position the other collimator is in an inactive position.

No. of Pages : 35 No. of Claims : 30

(12) PATENT APPLICATION PUBLICATION
(19) INDIA
(22) Date of filing of Application :09/07/2013
(21) Application No.5415/CHENP/2013 A
(43) Publication Date : 05/09/2014

(54) Title of the invention : CONTOUR GUIDED DEFORMABLE IMAGE REGISTRATION

(51) International classification :G06T7/00
(31) Priority Document No :61/423150
(32) Priority Date :15/12/2010
(33) Name of priority country :U.S.A.
(86) International Application No :PCT/IB2011/055638
Filing Date :13/12/2011
(87) International Publication No :WO 2012/080949
(61) Patent of Addition to Application Number :NA
Filing Date :NA
(62) Divisional to Application Number :NA
Filing Date :NA

(71)**Name of Applicant :**
1)KONINKLIJKE PHILIPS ELECTRONICS N.V.
Address of Applicant :High Tech Campus 5 NL 5656 AE Eindhoven Netherlands
(72)**Name of Inventor :**
1)MALLYA Yogisha
2)POSTON Timothy

(57) Abstract :
A method includes obtaining first volumetric image data which is acquired at a first time including a region of interest with a structural feature located at a first position. The method further includes obtaining second volumetric image data which is acquired at a second different time including the region of interest with the structural feature located at a second different position. The method further includes determining a registration transformation that registers the first and second volumetric image data such that the at least one structural feature in the first volumetric image data aligns with the at least one structural feature in the second volumetric image data. The registration transformation is based at least on a contour guided deformation registration. The method further includes generating a signal indicative of the registration transformation.

No. of Pages : 21 No. of Claims : 27

(12) PATENT APPLICATION PUBLICATION
(21) Application No.478/CHE/2012 A
(19) INDIA
(22) Date of filing of Application :09/02/2012
(43) Publication Date : 05/09/2014

(54) Title of the invention : SOLAR DRIVEN LIGHT WEIGHT FOUR WHEELER FOR ADVERTISING AND MULTIPURPOSE UTILITY VEHICLE.

(51) International classification :F24J
(31) Priority Document No :NA
(32) Priority Date :NA
(33) Name of priority country :NA
(86) International Application No :NA
Filing Date :NA
(87) International Publication No : NA
(61) Patent of Addition to Application Number :NA
Filing Date :NA
(62) Divisional to Application Number :NA
Filing Date :NA

(71)**Name of Applicant :**
1)S. DEVANEYAN
Address of Applicant :#3/1222, ANNAI ANJUHAM NAGAR, CHETTYMANDAPAM, KUMBAKONAM 612 001 Tamil Nadu India
2)SYED ZAHED
(72)**Name of Inventor :**
1)S. DEVANEYAN
2)SYED ZAHED

(57) Abstract :
Solar driven light weight four wheeler for advertising and multipurpose utility vehicle is powered by solar Photovoltaic modules [1]. These PV modules [1] are charging the batteries [4]. The entire set up is incorporated in a fabricated four wheeler. Once the vehicle is turned on for the operation power starts flowing from batteries [4] to public address system [5] where mike and speakers through junction box [3]. In addition to this lighting sub systems [5] are energized through junction box [3] from the battery [4]. Lighting sub subsystems consists of lighting for vehicles [6-1] and lightings for advertisement flux [6-2]. BLDC motors [8] [9] are receiving power from batteries [4] through the motor controller [7] to drive the rear wheel and front wheel as well. Complete Photovoltaic powered four wheelers, which can be used for multi utility vehicles like advertisement carrier, flex board advertisement carrier, load carrier in/out campus and general utility vehicle with all dismantle / reassemble mechanism for an appropriate application.

No. of Pages : 6 No. of Claims : 3

(12) PATENT APPLICATION PUBLICATION
(19) INDIA
(22) Date of filing of Application :21/06/2013
(21) Application No.4883/CHENP/2013 A
(43) Publication Date : 05/09/2014

(54) Title of the invention : OMEGA 3 CONCENTRATE

(51) International classification :A23D9/00,C11B1/10,C11B3/00
(31) Priority Document No :15872010
(32) Priority Date :27/12/2010
(33) Name of priority country :Chile
(86) International Application No :PCT/CL2011/000082
Filing Date :25/12/2011
(87) International Publication No :WO 2012/088620
(61) Patent of Addition to Application Number :NA
Filing Date :NA
(62) Divisional to Application Number :NA
Filing Date :NA

(71)**Name of Applicant :**
1)GOLDEN OMEGA S.A.
Address of Applicant :El Quisco 3140 Las Condes Santiago Chile
(72)**Name of Inventor :**
1)SEPšLVEDA REYES Juvenal Antonio
2)BERRIOS CORNEJO Miriam Rosa
3)FUENZALIDA D AZ Miguel ngel
4)MARKOVITS ROJAS Alejandro
5)HARTING GLADE Thomas Francis

(57) Abstract :
A simple efficient method for obtaining a concentrate that comprises around 80% by weight 3 fatty acid ethyl esters from a composition of material that contains 3 fatty acid esters or free 3 fatty acids which comprises the following steps: a) placing the composition of material in contact with at least 96% by weight ethanol an alkali and metal hydroxide at a temperature between 60 and 200°C to form a liquid mixture that comprises fatty acid alkaline salts; b) cooling the liquid mixture to a temperature between 50 and 20°C to form a solid phase and a liquid phase and separating the liquid phase from the solid phase; c) placing the liquid phase separated in step b) in contact with an acid to form an acidified mixture with a water content of less than 10% in which the mixture consists of a solid phase that comprises the alkali metal salt of the acid and a liquid phase that comprises 3 fatty acids; d) heating the mixture from step c) to 50 to 150°C in the presence of an esterification catalyst to form a mixture that comprises 3 fatty acid ethyl esters; e) placing the mixture from step d) in contact with an alkali to form a neutralized mixture; f) distilling the neutralized mixture to obtain a distillate that comprises around 80% by weight 3 fatty acid ethyl esters.

No. of Pages : 22 No. of Claims : 7

(12) PATENT APPLICATION PUBLICATION
(19) INDIA
(22) Date of filing of Application :28/06/2013
(21) Application No.5107/CHENP/2013 A
(43) Publication Date : 05/09/2014

(54) Title of the invention : FLOOR FOR AN ELEVATOR CAR

(51) International classification :B66B11/02
(31) Priority Document No :11161363.4
(32) Priority Date :06/04/2011
(33) Name of priority country :EPO
(86) International Application No :PCT/EP2012/054694
Filing Date :16/03/2012
(87) International Publication No :WO 2012/136461
(61) Patent of Addition to Application Number :NA
Filing Date :NA
(62) Divisional to Application Number :NA
Filing Date :NA

(71)**Name of Applicant :**
1)INVENTIO AG
Address of Applicant :Seestrasse 55 CH 6052 Hergiswil Switzerland
(72)**Name of Inventor :**
1)BRGGER Beat
2)SCHULER Christoph
3)ZEDER Lukas
4)WEST Thomas
5)SCHAFFHAUSER Urs
6)STREBEL Ren

(57) Abstract :
The invention relates to a floor for an elevator car comprising a base plate (7) a cover plate (8) and a support structure (6) arranged therebetween. The support structure (6) comprises a first grating arrangement (10) made of a plurality of upright intersecting profiled sections (12 13). For local reinforcement the support structure (6) additionally comprises a centrally arranged second grating arrangement (11) that is superimposed on the first arrangement.

No. of Pages : 16 No. of Claims : 9

(12) PATENT APPLICATION PUBLICATION
(19) INDIA
(22) Date of filing of Application :09/07/2013
(21) Application No.5441/CHENP/2013 A
(43) Publication Date : 05/09/2014

(54) Title of the invention : NON MAP BASED MOBILE INTERFACE

(51) International classification :G01C21/20,G01C21/36,H04W4/02
(31) Priority Document No :61/432129
(32) Priority Date :12/01/2011
(33) Name of priority country :U.S.A.
(86) International Application No :PCT/US2012/020989
Filing Date :11/01/2012
(87) International Publication No :WO 2012/097098
(61) Patent of Addition to Application Number :NA
Filing Date :NA
(62) Divisional to Application Number :NA
Filing Date :NA

(71)**Name of Applicant :**
1)QUALCOMM INCORPORATED
Address of Applicant :Attn: International IP Administration 5775 Morehouse Drive San Diego California 92121 U.S.A.
(72)**Name of Inventor :**
1)GARIN Lionel Jacques
2)NAGUIB Ayman Fawzy
3)HOLM Eric Kendall
4)PADOVANI Niccolo A.
5)DAS Saumitra Mohan
6)BLAICH Andrew C.

(57) Abstract :
Example methods apparatuses or articles of manufacture are disclosed herein that may be utilized in whole or in part to facilitate or support one or more navigation or positioning operations or techniques using for example a non map based location or routing interface for use in or with mobile communication devices.

No. of Pages : 68 No. of Claims : 52

(12) PATENT APPLICATION PUBLICATION
(21) Application No.479/CHE/2012 A
(19) INDIA
(22) Date of filing of Application :09/02/2012
(43) Publication Date : 05/09/2014

(54) Title of the invention : SOLAR DRIVEN DRAINAGE WATER COLLECTING VEHICLE

(51) International classification :F24J
(31) Priority Document No :NA
(32) Priority Date :NA
(33) Name of priority country :NA
(86) International Application No :NA
Filing Date :NA
(87) International Publication No : NA
(61) Patent of Addition to Application Number :NA
Filing Date :NA
(62) Divisional to Application Number :NA
Filing Date :NA

(71)**Name of Applicant :**
1)SYED ZAHED
Address of Applicant :#33-1-69, TVP STREET, ONGOLE, PRAKASAM[DT] - 523 001 Andhra Pradesh India
(72)**Name of Inventor :**
1)SYED ZAHED

(57) Abstract :
Solar driven drainage water collecting vehicle encompass solar modules [1] output is connected to charge controller unit [2]. From charge controller unit [2], there are two outputs goes one to junction box [3] and to another to battery banks [4]. From Junction box [3] again three outputs goes one to vehicle lighting sub system [5], next to pumping sub systems [6] and another to BLDC motors [8] [9] through the controller [7]. Power produced by solar Photovoltaic modules [1] is charging the batteries [4]. The entire set up is incorporated in a fabricated four wheeler or three wheeler. Once the vehicle is turned on for the operation power starts flowing from batteries [4] to lightings sub system [5] through junction box [3]. In addition to this lighting sub systems [5] are energized through junction box [3] from the battery [4]. BLDC motors [8] [9] are receiving power from batteries [4] through the motor controller [7] and through the junction box [3]. Complete photovoltaic powered two or three wheelers can be used to collect all the drainage water with the help of PV powered pumps and transported to the area of agriculture or biomass centre for bio gas generation.

No. of Pages : 6 No. of Claims : 3

(12) PATENT APPLICATION PUBLICATION
(19) INDIA
(22) Date of filing of Application :06/07/2013
(21) Application No.5349/CHENP/2013 A
(43) Publication Date : 05/09/2014

(54) Title of the invention : METHOD AND APPARATUS TO PRODUCE PULP USING PRE HYDROLYSIS AND KRAFT COOKING

(51) International classification :D21C1/04
(31) Priority Document No :61/445253
(32) Priority Date :22/02/2011
(33) Name of priority country :U.S.A.
(86) International Application No :PCT/US2012/024848
Filing Date :13/02/2012
(87) International Publication No :WO 2012/115812
(61) Patent of Addition to Application Number :NA
Filing Date :NA
(62) Divisional to Application Number :NA
Filing Date :NA

(71)**Name of Applicant :**
1)ANDRITZ INC.
Address of Applicant :One Namic Place Glens Falls New York 12801 U.S.A.
(72)**Name of Inventor :**
1)LEAVITT Aaron T.
2)PAKARINEN Jussi
3)GREENWOOD Brian F.

(57) Abstract :
A pulp cooking system including: a cellulosic material feed system a pre hydrolysis reactor vessel and a Kraft cooking reactor vessel. The feed material system includes a steaming chip bin (10) and a high pressure transfer device (12). The pre hydrolysis reactor vessel maintains the feed material in a mildly acidic condition and allows hydrolysate to be extracted through screens (60) below a hydrolysis zone (56) in the vessel. A wash zone (66) is below the screens and allows wash liquid to flow through the feed material in a cross current direction. The wash liquid and hydrolysate removed from the feed material is extracted from the wash zone through the screens (60). The feed material is maintained in a mildly acidic condition through the pre hydrolysis reactor vessel until the material enters the Kraft cooking vessel where the feed material is treated with alkaline cooking liquors.

No. of Pages : 32 No. of Claims : 28

(12) PATENT APPLICATION PUBLICATION
(19) INDIA
(22) Date of filing of Application :08/07/2013
(21) Application No.5350/CHENP/2013 A
(43) Publication Date : 05/09/2014

(54) Title of the invention : NETWORK EVENT MANAGEMENT

(51) International classification :G06F15/173,G06F11/00
(31) Priority Document No :11155862.3
(32) Priority Date :24/02/2011
(33) Name of priority country :EPO
(86) International Application No :PCT/IB2012/050451
Filing Date :31/01/2012
(87) International Publication No :WO 2012/114215
(61) Patent of Addition to Application Number :NA
Filing Date :NA
(62) Divisional to Application Number :NA
Filing Date :NA

(71)**Name of Applicant :**
1)INTERNATIONAL BUSINESS MACHINES CORPORATION
Address of Applicant :New Orchard Road Armonk NY 10504 U.S.A.
2)IBM UNITED KINGDOM LIMITED
3)IBM (CHINA) INVESTMENT COMPANY LIMITED
(72)**Name of Inventor :**
1)FRANKLIN David Richard
2)STEWART Kristian Jon
3)DINGER John
4)LAKE John Michael

(57) Abstract :
An apparatus for predicting a network event flood comprises an event rate detector for detecting rates of event emissions from one or more devices; an aggregator for producing an aggregate rate and an aggregate rate trend of the rates of event emissions from a plurality of the devices; a level generator for generating a plurality of levels comprising maximum acceptable event rate values of a plurality of the aggregate rate trends over plural time periods; a storage component for storing the plurality of levels; a comparator for comparing a current aggregate rate trend with at least a selected one of the levels; and a signaller for signalling a predicted event flood responsive to the comparator detecting that the current aggregate rate trend will exceed the at least a selected one of the levels at a first point in time.

No. of Pages : 25 No. of Claims : 27

(12) PATENT APPLICATION PUBLICATION
(19) INDIA
(22) Date of filing of Application :13/07/2013
(21) Application No.5583/CHENP/2013 A
(43) Publication Date : 05/09/2014

(54) Title of the invention : IN LINE COLOR MIXER

(51) International classification :C09C3/04,B29B7/00,B01F3/08
(31) Priority Document No :61/432777
(32) Priority Date :14/01/2011
(33) Name of priority country :U.S.A.
(86) International Application No :PCT/US2012/021254
Filing Date :13/01/2012
(87) International Publication No :WO 2012/097259
(61) Patent of Addition to Application Number :NA
Filing Date :NA
(62) Divisional to Application Number :NA
Filing Date :NA

(71)**Name of Applicant :**
1)COLOR MATRIX GROUP INC.
Address of Applicant :680 North Rocky River Drive Berea OH 44017 U.S.A.
(72)**Name of Inventor :**
1)SLY Robert
2)MAURI Jim
3)MASAR Jeff
4)BELL Keith

(57) Abstract :
The method of producing a colored powder of a polymeric material includes the steps of selecting a feedstock of said polymeric material pulverizing said polymeric material in a pulverizer to produce a powder moving the powder directly from the pulverizer to a mixer; spraying a liquid formulation including a colorant into the powder within the mixer and mixing the liquid formulation and powder.

No. of Pages : 22 No. of Claims : 20

(12) PATENT APPLICATION PUBLICATION
(21) Application No.5584/CHENP/2013 A
(19) INDIA
(22) Date of filing of Application :14/07/2013
(43) Publication Date : 05/09/2014

(54) Title of the invention : METHOD AND APPARATUS PROVIDING INTERFERENCE MEASUREMENT IN A COORDINATED MULTI POINT TRANSMISSION ENVIRONMENT

(51) International classification :H04W24/02,H04W16/24
(31) Priority Document No :12/928704
(32) Priority Date :16/12/2010
(33) Name of priority country :U.S.A.
(86) International Application No :PCT/IB2011/054945
Filing Date :07/11/2011
(87) International Publication No :WO 2012/080857
(61) Patent of Addition to Application Number :NA
Filing Date :NA
(62) Divisional to Application Number :NA
Filing Date :NA

(71)**Name of Applicant :**
1)NOKIA CORPORATION
Address of Applicant :Keilalahdentie 4 FI 02150 Espoo Finland
(72)**Name of Inventor :**
1)KOIVISTO Tommi
2)ROMAN Timo
3)ENESCU Mihai
4)LUNTTILA Timo

(57) Abstract :
A method includes receiving signaling from a base station where the signaling includes information descriptive of a muted resource element pattern configuration when operating in a cell that is associated with at least one multi cell cooperation area. The method further includes making at least one measurement according to the received information for at least one of the cooperation areas for making an interference estimate and transmitting measurement results to the base station. Another method includes transmitting signaling that contains information descriptive of a muted resource element pattern configuration to a user equipment operating in a cell that is associated with at least one multi cell cooperation area. This method further includes muting resource element transmissions in accordance with the information descriptive of the muted resource element pattern configuration; and receiving from the user equipment at least one measurement made according to the transmitted signaling for at least one of the cooperation areas. In these methods different cooperation areas are associated with mutually orthogonal muted resource elements. Corresponding apparatus and computer programs stored on non transitory computer readable medium are also disclosed.

No. of Pages : 35 No. of Claims : 40

(12) PATENT APPLICATION PUBLICATION
(21) Application No.5585/CHENP/2013 A
(19) INDIA
(22) Date of filing of Application :15/07/2013
(43) Publication Date : 05/09/2014

(54) Title of the invention : CAPACITIVE TOUCH SENSING DEVICES AND METHODS OF MANUFACTURING THEREOF

(51) International classification :G06F3/044
(31) Priority Document No :12/975025
(32) Priority Date :21/12/2010
(33) Name of priority country :U.S.A.
(86) International Application No :PCT/US2011/065266
Filing Date :15/12/2011
(87) International Publication No :WO 2012/087764
(61) Patent of Addition to Application Number :NA
Filing Date :NA
(62) Divisional to Application Number :NA
Filing Date :NA

(71)**Name of Applicant :**
1)QUALCOMM MEMS TECHNOLOGIES INC.
Address of Applicant :5775 Morehouse Drive San Diego California 92121 U.S.A.
(72)**Name of Inventor :**
1)MIGNARD Marc Maurice
2)ELLOWAY Donald J.
3)MARTIN Russel A.
4)GOVIL Alok

(57) Abstract :
The present disclosure provides systems methods and apparatus for sensing the location(s) of conductive objects disposed near a sensor array. In one aspect a sensor array includes a conductive row and a conductive column formed of non transparent material(s). At least a portion of the conductive row overlaps at least a portion of the conductive column and each of the conductive rows and columns include sensing elements. The sensing elements at least partially define volumes including non conductive and optically transparent material(s) to limit the loss of light that passes therethrough.

No. of Pages : 79 No. of Claims : 64

(12) PATENT APPLICATION PUBLICATION
(21) Application No.5586/CHENP/2013 A
(19) INDIA
(22) Date of filing of Application :15/07/2013
(43) Publication Date : 05/09/2014

(54) Title of the invention : PROCESSING OF IMAGE DATA COMPRISING EFFECTS OF TURBULENCE IN A LIQUID MEDIUM

(51) International classification :G06T5/00
(31) Priority Document No :11 50655
(32) Priority Date :28/01/2011
(33) Name of priority country :France
(86) International Application No :PCT/FR2012/050055
Filing Date :09/01/2012
(87) International Publication No :WO 2012/101355
(61) Patent of Addition to Application Number :NA
Filing Date :NA
(62) Divisional to Application Number :NA
Filing Date :NA

(71)**Name of Applicant :**
1)ELECTRICITE DE FRANCE
Address of Applicant :22 30 avenue de Wagram F 75008 Paris France
(72)**Name of Inventor :**
1)PAUL Nicolas
2)DE CHILLAZ Antoine

(57) Abstract :
The invention relates to the processing of successive digital image data acquired by a camera immersed in a liquid comprising turbulence such as water in a nuclear reactor core this turbulence causing an effect of apparent displacement of pixels of the images. The processing comprises advantageously: a modelling of the effect of the turbulence on the pixels of the images and a deconvolution by this modelling of a time averaged image.

No. of Pages : 35 No. of Claims : 25

(12) PATENT APPLICATION PUBLICATION
(19) INDIA
(22) Date of filing of Application :15/07/2013
(21) Application No.5587/CHENP/2013 A
(43) Publication Date : 05/09/2014

(54) Title of the invention : DEVICE AND METHOD FOR REDUCING THICKNESS OF ABSORBER

(51) International classification :A61F13/15,A61F13/49,A61F13/53
(31) Priority Document No :2011010063
(32) Priority Date :20/01/2011
(33) Name of priority country :Japan
(86) International Application No :PCT/JP2012/050589
Filing Date :13/01/2012
(87) International Publication No :WO 2012/099015
(61) Patent of Addition to Application Number :NA
Filing Date :NA
(62) Divisional to Application Number :NA
Filing Date :NA

(71)**Name of Applicant :**
1)UNI CHARM CORPORATION
Address of Applicant :182 Kinseichoshimobun Shikokuchuo shi Ehime 7990111 Japan
(72)**Name of Inventor :**
1)HOSHIKA Kazuhiko

(57) Abstract :
Provided is a device for reducing thickness of an absorber having a liquid absorbent fiber as the main material thereof. The device according to the present invention comprises: a press device which compresses the absorber delivered in a delivery direction in a thickness direction orthogonal to the delivery direction to reduce the thickness of the absorber; a pair of rolls which is disposed downstream of the press device in the delivery direction and which passes the absorber through a gap formed by the outer peripheral surfaces thereof facing each other while rotating; a sensor which outputs measurement information on the thickness of the absorber at a position between the press device and the pair of rolls; and a control section which sets the size of the gap between the pair of rolls based on the measurement information.

No. of Pages : 36 No. of Claims : 5

(12) PATENT APPLICATION PUBLICATION
(19) INDIA
(22) Date of filing of Application :14/06/2013
(21) Application No.4608/CHENP/2013 A
(43) Publication Date : 05/09/2014

(54) Title of the invention : INTELLIGENT CODE DIFFERENCING USING CODE CLONE DETECTION

(51) International classification :G06F11/28
(31) Priority Document No :NA
(32) Priority Date :NA
(33) Name of priority country :NA
(86) International Application No :PCT/CN2010/079801
Filing Date :15/12/2010
(87) International Publication No :WO 2012/079230
(61) Patent of Addition to Application Number :NA
Filing Date :NA
(62) Divisional to Application Number :NA
Filing Date :NA

(71)**Name of Applicant :**
1)MICROSOFT CORPORATION
Address of Applicant :One Microsoft Way Redmond Washington 98052 U.S.A.
(72)**Name of Inventor :**
1)LIU Weipeng
2)CHENG Gong
3)KHAN Sadi
4)GE Song
5)ZHANG Dongmei
6)DANG Yingnong

(57) Abstract :
The subject disclosure relates to systems and methods for intelligent code differencing employing code clone detection technology. A large complex source code change (e.g. moving and renaming functions across source files) may involve edits in multiple source files. As such developers and/or code reviewers may have a difficult time identifying the large and complex changes and determining which changes are most significant using existing code differencing tools. Using code clone detection technology different types of changes either across source files or inside a particular source file may be determined. The changes can be categorized as new duplicated and deleted code snippets or functions and moved renamed or modified functions. For changes categorized as duplicated or modified further categorization by the level of importance of the change can be made. For example the change can be trivial minor or significant. Visualization of the changes further provides intuitive understanding of the changes.

No. of Pages : 46 No. of Claims : 20

(12) PATENT APPLICATION PUBLICATION
(19) INDIA
(22) Date of filing of Application :02/07/2013
(21) Application No.5152/CHENP/2013 A
(43) Publication Date : 05/09/2014

(54) Title of the invention : PIXEL LEVEL ADAPTIVE INTRA SMOOTHING

(51) International classification :H04N7/26,H04N7/34
(31) Priority Document No :61/437482
(32) Priority Date :28/01/2011
(33) Name of priority country :U.S.A.
(86) International Application No :PCT/US2012/021747
Filing Date :18/01/2012
(87) International Publication No :WO 2012/102929
(61) Patent of Addition to Application Number :NA
Filing Date :NA
(62) Divisional to Application Number :NA
Filing Date :NA

(71)**Name of Applicant :**
1)QUALCOMM INCORPORATED
Address of Applicant :5775 Morehouse Drive ATTN: International IP Administration San Diego California 92121 1714 U.S.A.
(72)**Name of Inventor :**
1)ZHENG Yunfei
2)COBAN Muhammed Zeyd
3)KARCZEWICZ Marta

(57) Abstract :
This disclosure describes intra smoothing techniques for intra coding video data. In one example a video encoder is configured to determine a plurality of prediction samples for intra predictive coding of a block to be coded in a video frame calculate a local statistic for a first prediction sample of the prediction samples select a filter from a plurality of filters based on the local statistic and apply the selected filter to the first prediction sample. The video encoder may also be configured to calculate at least one local statistic for each prediction sample of the prediction samples select a filter from a plurality of different filters based on the at least one local statistic for each prediction sample and apply each selected filter to the corresponding prediction sample to generate the filtered version of the prediction sample. Embodiments further include video decoders and method of decoding encoded video signals.

No. of Pages : 70 No. of Claims : 76

(12) PATENT APPLICATION PUBLICATION
(19) INDIA
(22) Date of filing of Application :02/07/2013
(21) Application No.5154/CHENP/2013 A
(43) Publication Date : 05/09/2014

(54) Title of the invention : DRIVE SOURCE CONTROL DEVICE FOR HYBRID VEHICLE DRIVE SOURCE CONTROL METHOD FOR HYBRID VEHICLE AND HYBRID VEHICLE

(51) International classification	:B60W10/08,B60K6/445,B60W10/06
(31) Priority Document No	:NA
(32) Priority Date	:NA
(33) Name of priority country	:NA
(86) International Application No	:PCT/JP2011/000723
Filing Date	:09/02/2011
(87) International Publication No	:WO 2012/107957
(61) Patent of Addition to Application Number	:NA
Filing Date	:NA
(62) Divisional to Application Number	:NA
Filing Date	:NA

(71)**Name of Applicant :**
1)SUZUKI MOTOR CORPORATION
Address of Applicant :300 Takatsuka cho Minami ku Hamamatsu shi Shizuoka 4328611 Japan
(72)**Name of Inventor :**
1)OHKUMA Hitoshi
2)ITO Yoshiki
3)SAITO Masakazu
4)TAGAWA Masaaki
5)HOSOE Yukihiro

(57) Abstract :
Provided is drive source control for a hybrid vehicle wherein a motor generator can be comfortably driven by starting an internal combustion engine only at minimum required timing during backward travel. A drive source control device (1) for a hybrid vehicle which travels while being equipped with an engine (2) and motor generators (4 5) wherein a drive control unit (32) reduces the target rotation speed of the first motor generator (4) when a shift position detection unit (47) acquires a backward travel instruction and a battery state of charge detection unit (36) detects that the remaining charge amount (SOC) of a battery (21) is a set value or less while the operation of the engine (2) is being stopped.

No. of Pages : 49 No. of Claims : 10

(12) PATENT APPLICATION PUBLICATION
(21) Application No.5626/CHENP/2013 A
(19) INDIA
(22) Date of filing of Application :15/07/2013
(43) Publication Date : 05/09/2014

(54) Title of the invention : METHOD AND APPARATUS FOR A CONTROL PLANE TO MANAGE DOMAIN BASED SECURITY AND MOBILITY IN AN INFORMATION CENTRIC NETWORK

(51) International classification :H04W64/00
(31) Priority Document No :61/439769
(32) Priority Date :04/02/2011
(33) Name of priority country :U.S.A.
(86) International Application No :PCT/CN2012/070889
Filing Date :06/02/2012
(87) International Publication No :WO 2012/103818
(61) Patent of Addition to Application Number :NA
Filing Date :NA
(62) Divisional to Application Number :NA
Filing Date :NA

(71)**Name of Applicant :**
1)HUAWEI TECHNOLOGIES CO. LTD.
Address of Applicant :Huawei Administration Building Bantian Longgang Shenzhen Guangdong 518129 China
(72)**Name of Inventor :**
1)WANG Guoqiang
2)ZHANG Xinwen
3)RAVINDRAN Ravi

(57) Abstract :
A networking system comprising a virtual group controller in an information centric network configured to enable mobility and security for a plurality of users groups of the information centric network a plurality of user groups coupled to the virtual group controller and associated with the users a plurality of agents that are each associated with one of the user groups and a database for trusted service profile coupled to the virtual group controller wherein the virtual group controller is configured to interact with the agents to enable mobility for the user groups using a server less domain based naming scheme.

No. of Pages : 52 No. of Claims : 25

(12) PATENT APPLICATION PUBLICATION
(19) INDIA
(22) Date of filing of Application :09/07/2013
(21) Application No.5416/CHENP/2013 A
(43) Publication Date : 05/09/2014

(54) Title of the invention : SYSTEM AND METHOD FOR GENERATING AND DISPLAYING A 2D PROJECTION FROM A 3D OR 4D DATASET

(51) International classification :G06T15/08,G06T11/00,G06T9/00
(31) Priority Document No :61/423143
(32) Priority Date :15/12/2010
(33) Name of priority country :U.S.A.
(86) International Application No :PCT/IB2011/055631
Filing Date :13/12/2011
(87) International Publication No :WO 2012/080943
(61) Patent of Addition to Application Number :NA
Filing Date :NA
(62) Divisional to Application Number :NA
Filing Date :NA

(71)**Name of Applicant :**
1)KONINKLIJKE PHILIPS ELECTRONICS N.V.
Address of Applicant :High Tech Campus 5 NL 5656 AE Eindhoven Netherlands
2)PHILIPS INTELLECTUAL PROPERTY & STANDARDS GMBH
3)THE REGENTS OF THE UNIVERSITY OF COLORADO A BODY CORPORATE
(72)**Name of Inventor :**
1)NEUBAUER Anne Morawski
2)DEN HARTOG Willem Frederik
3)CAROLL John Dougher
4)WINK Onno
5)SCHOONENBERG Gert Antonius Franciscus
6)CHEN Shiuh Yung
7)GRASS Michael

(57) Abstract :
A system and method is described by which so called standard angiographic views can be generated using a 3 or 4 D reconstructed image of the object of interest. One preferred example is the reconstruction of coronary angiograms from rotational angiography sequences. Once the 3D image is created it can be forward projected into the user defined standard views for live presentation during the procedure. It is anticipated that these standard views which more closely mimic what a physician is accustomed to see will be more readily accepted by the interventional community.

No. of Pages : 13 No. of Claims : 10

(12) PATENT APPLICATION PUBLICATION
(19) INDIA
(22) Date of filing of Application :09/07/2013
(21) Application No.5417/CHENP/2013 A
(43) Publication Date : 05/09/2014

(54) Title of the invention : MONITORING FOR POSTPARTUM HEMORRHAGE

(51) International classification :A61B8/08,A61B5/00
(31) Priority Document No :10194930.3
(32) Priority Date :14/12/2010
(33) Name of priority country :EPO
(86) International Application No :PCT/IB2011/055524
Filing Date :07/12/2011
(87) International Publication No :WO 2012/080909
(61) Patent of Addition to Application Number :NA
Filing Date :NA
(62) Divisional to Application Number :NA
Filing Date :NA

(71)**Name of Applicant :**
1)KONINKLIJKE PHILIPS ELECTRONICS N.V.
Address of Applicant :High Tech Campus 5 NL 5656 AE Eindhoven Netherlands
(72)**Name of Inventor :**
1)VAJINEPALLI Pallavi
2)SISODIA Rajendra Singh
3)FIRTION Celine
4)ANAND Ajay
5)XIE Hua
6)KESWARPU Payal
7)GUPTA Lalit
8)PETRUZZELLO John

(57) Abstract :
A device for monitoring a subject for postpartum hemorrhage is disclosed. It comprises an ultrasound transducer for applying ultrasound energy focused at a region of uterine musculature of the subject for creating an acoustic radiation force for generating a shear wave in the uterine musculature. A second ultrasound transducer radiates ultrasound energy into the subject and receives the echoed ultrasound energy. By analyzing a signal representative of the received echoed ultrasound energy the speed of propagation of the shear wave in the uterine musculature is determined. The value of the tone of the uterine musculature is estimated based on the speed of propagation of the shear wave and conveyed to a user. Further a device for detecting and locating a hemorrhage and estimating its severity are also disclosed.

No. of Pages : 17 No. of Claims : 10

(12) PATENT APPLICATION PUBLICATION
(19) INDIA
(22) Date of filing of Application :09/07/2013

(21) Application No.5418/CHENP/2013 A
(43) Publication Date : 05/09/2014

(54) Title of the invention : ULTRASOUND IMAGING SYSTEM AND METHOD WITH PEAK INTENSITY DETECTION

(51) International classification :A61B8/00
(31) Priority Document No :61/422764
(32) Priority Date :14/12/2010
(33) Name of priority country :U.S.A.
(86) International Application No :PCT/IB2011/055513
Filing Date :07/12/2011
(87) International Publication No :WO 2012/080905
(61) Patent of Addition to Application Number :NA
Filing Date :NA
(62) Divisional to Application Number :NA
Filing Date :NA

(71)**Name of Applicant :**
1)KONINKLIJKE PHILIPS ELECTRONICS N.V.
Address of Applicant :High Tech Campus 5 NL 5656 AE Eindhoven Netherlands
(72)**Name of Inventor :**
1)HARRISON Gerard Joseph
2)GAUTHIER Thomas Patrice Jean Arsene

(57) Abstract :
The present invention relates to an ultrasound imaging system (10)and method that allow for a quantitative analysis of the acquired images during acquisition and for an optimized workflow for image acquisition and analysis. The proposed ultrasound imaging system (10) comprises a transducer (12) configured to acquire ultrasound images (14) of an object based on one or more adjustable acquisition parameters an analyzer (22) configured to analyze an ultrasound image (14)in real time for a mean intensity value(24) and a processor (28) configured to determine in real time when the mean intensity value (24) has reached a peak and to change the setting of at least one of the one or more adjustable acquisition parameters after a peak has been determined.

No. of Pages : 22 No. of Claims : 15

(12) PATENT APPLICATION PUBLICATION
(19) INDIA
(22) Date of filing of Application :09/07/2013
(21) Application No.5419/CHENP/2013 A
(43) Publication Date : 05/09/2014

(54) Title of the invention : INTEGRATED WORK FLOW FOR ACCURATE INPUT FUNCTION ESTIMATION

(51) International classification :A61B6/03,A61B6/00
(31) Priority Document No :61/422698
(32) Priority Date :14/12/2010
(33) Name of priority country :U.S.A.
(86) International Application No :PCT/IB2011/055662
Filing Date :14/12/2011
(87) International Publication No :WO 2012/080960
(61) Patent of Addition to Application Number :NA
Filing Date :NA
(62) Divisional to Application Number :NA
Filing Date :NA

(71)**Name of Applicant :**
1)KONINKLIJKE PHILIPS ELECTRONICS N.V.
Address of Applicant :High Tech Campus 5 NL 5656 AE Eindhoven Netherlands
2)PHILIPS INTELLECTUAL PROPERTY & STANDARDS GMBH
(72)**Name of Inventor :**
1)GEORGI Jens Christoph
2)NARAYANAN Manoj

(57) Abstract :
When estimating an arterial input function or a patient under study cross calibration factors are generated by comparing nuclear scan data of a radioactive material (e.g. F18) and measuring a sample of the radioactive material in a gamma counter. The derived cross calibration factors are applied to venous samples collected from the patient during a nuclear scan after infusion with a radioactive tracer to convert gamma values counted by the gamma counter into concentration values. The concentration values are used to optimize an initial estimated input function thereby generating an arterialized input function.

No. of Pages : 21 No. of Claims : 19

(12) PATENT APPLICATION PUBLICATION
(19) INDIA
(22) Date of filing of Application :16/07/2013
(21) Application No.5646/CHENP/2013 A
(43) Publication Date : 05/09/2014

(54) Title of the invention : MICROSTRIP TO AIRSTRIP TRANSITION WITH LOW PASSIVE INTER MODULATION

(51) International classification :H01Q5/00
(31) Priority Document No :13/248356
(32) Priority Date :29/09/2011
(33) Name of priority country :U.S.A.
(86) International Application No :PCT/US2012/057293
Filing Date :26/09/2012
(87) International Publication No :WO 2013/049172
(61) Patent of Addition to Application Number :NA
Filing Date :NA
(62) Divisional to Application Number :NA
Filing Date :NA

(71)**Name of Applicant :**
1)ANDREW LLC
Address of Applicant :1100 CommScope Place SE Hickory NC 28602 U.S.A.
(72)**Name of Inventor :**
1)TIMOFEEV Igor

(57) Abstract :
A microstrip to airstrip transition is provided. The microstrip to airstrip transition includes a ground plane a printed circuit board a microstrip a solder mask and an airstrip. The ground plane has first and second sides. The printed circuit board has first and second sides and is disposed on the first side of the ground plane. The microstrip is disposed on a portion of the first side of the printed circuit board and the solder mask is disposed over at least a portion of the microstrip. The airstrip is disposed over the at least portion of the solder mask and the solder mask prevents direct contact between the microstrip and the airstrip.

No. of Pages : 31 No. of Claims : 33

(12) PATENT APPLICATION PUBLICATION
(19) INDIA
(22) Date of filing of Application :22/03/2013
(21) Application No.2299/CHENP/2013 A
(43) Publication Date : 05/09/2014

(54) Title of the invention : ANTIBODY AGAINST COLORECTAL CANCER MARKER

(51) International classification :C07K16/30,C12N5/10,C12N15/02
(31) Priority Document No :2010195926
(32) Priority Date :01/09/2010
(33) Name of priority country :Japan
(86) International Application No :PCT/JP2011/070418
Filing Date :01/09/2011
(87) International Publication No :WO 2012/029990
(61) Patent of Addition to Application Number :NA
Filing Date :NA
(62) Divisional to Application Number :NA
Filing Date :NA

(71)**Name of Applicant :**
1)Bio Matrix Research Inc.
Address of Applicant :105 Higashifukai Nagareyama shi Chiba 2700101 Japan
2)National Cancer Center
(72)**Name of Inventor :**
1)SATOFUKA Hiroyuki
2)OKABE Youko
3)MATSUMURA Yasuhiro
4)YASUNAGA Masahiro

(57) Abstract :
Disclosed is a novel monoclonal antibody which binds to SLC6A6 or an extracellular domain thereof. The disclosed monoclonal antibody recognizes native SLC6A6 or a polypeptide of an extracellular domain of SLC6A6.

No. of Pages : 49 No. of Claims : 13

(12) PATENT APPLICATION PUBLICATION
(19) INDIA
(22) Date of filing of Application :26/03/2013
(21) Application No.2366/CHENP/2013 A
(43) Publication Date : 05/09/2014

(54) Title of the invention : AMATOXIN CONJUGATES WITH IMPROVED LINKERS

(51) International classification :A61K47/48,A61P35/00
(31) Priority Document No :10 012573.1
(32) Priority Date :30/09/2010
(33) Name of priority country :EPO
(86) International Application No :PCT/EP2011/004875
Filing Date :29/09/2011
(87) International Publication No :WO 2012/041504
(61) Patent of Addition to Application Number :NA
Filing Date :NA
(62) Divisional to Application Number :NA
Filing Date :NA

(71)**Name of Applicant :**
1)HEIDELBERG PHARMA GMBH
Address of Applicant :Schriesheimer Strasse 101 68526 Ladenburg Germany
(72)**Name of Inventor :**
1)ANDERL Jan
2)SIMON Werner
3)MLLER Christoph

(57) Abstract :
The invention relates to tumour therapy. In one aspect the present invention relates to conjugates of an amatoxin and a target binding moiety e.g. an antibody connected by a linker comprising a urea moiety which are useful in the treatment of cancer. In a further aspect the invention relates to pharmaceutical compositions comprising such conjugates.

No. of Pages : 58 No. of Claims : 16

(12) PATENT APPLICATION PUBLICATION
(19) INDIA
(22) Date of filing of Application :18/06/2013
(21) Application No.2639/CHE/2013 A
(43) Publication Date : 05/09/2014

(54) Title of the invention : METHOD AND APPARATUS FOR GENERATING A PRINTING MEMBER

(51) International classification :G06F17/30
(31) Priority Document No :13/529,581
(32) Priority Date :21/06/2012
(33) Name of priority country :U.S.A.
(86) International Application No :NA
Filing Date :NA
(87) International Publication No : NA
(61) Patent of Addition to Application Number :NA
Filing Date :NA
(62) Divisional to Application Number :NA
Filing Date :NA

(71)**Name of Applicant :**
1)XEROX CORPORATION
Address of Applicant :45 GLOVER AVENUE, P.O. BOX 4505, NORWALK, CONNECTICUT 06856-4505 U.S.A.
(72)**Name of Inventor :**
1)DALAL, EDUL, N.
2)RASMUSSEN, D, RENE

(57) Abstract :
An approach is provided for generating a printing member. The approach involves determining one or more image areas associated with printing one or more images, the one or more image areas being positioned on a surface of a substrate. The approach also involves determining a liquid interaction behavior of at least the surface of substrate is one of hydrophobic or hydrophilic. The approach further involves causing, at least in part, a substance that is the other of the determined liquid interaction behavior of the surface of the substrate to be applied to the one or more image areas on the surface of the substrate by a jetting process. In one embodiment, the printing member is mounted inside a printing system when the substance is applied. In one embodiment, the surface may be completely or partially cleaned and a new image created by another application of the substance.

No. of Pages : 25 No. of Claims : 10

(12) PATENT APPLICATION PUBLICATION
(19) INDIA
(22) Date of filing of Application :17/06/2013
(21) Application No.4633/CHENP/2013 A
(43) Publication Date : 05/09/2014

(54) Title of the invention : TIMED PRODUCT SUPPLY FOR A CENTRIFUGE AND CENTRIFUGE THEREFOR

(51) International classification :B04B11/02,B04B11/04,B04B1/08
(31) Priority Document No :10 2010 052 301.1
(32) Priority Date :23/11/2010
(33) Name of priority country :Germany
(86) International Application No :PCT/EP2011/070528
Filing Date :21/11/2011
(87) International Publication No :WO 2012/069398
(61) Patent of Addition to Application Number :NA
Filing Date :NA
(62) Divisional to Application Number :NA
Filing Date :NA

(71)**Name of Applicant :**
1)GEA MECHANICAL EQUIPMENT GMBH
Address of Applicant :Werner Habig Str. 1 59302 Oelde Germany
(72)**Name of Inventor :**
1)K–NIG Julian
2)TERWEY Bernd
3)MACKEL Wilfried
4)PENKL Andreas
5)BATHELT Thomas
6)QUITER Kathrin

(57) Abstract :
Method for processing in particular for clarifying a liquid using at least one continuously operating centrifuge in particular a separator with a disc stack (8) wherein a volumetric flow of the liquid is fed into the centrifuge particles (16 17) are separated from the liquid and if appropriate the liquid is separated into a plurality of liquid phases and the liquid or the liquid phases and the separated particles (16 17) are discharged separately from the centrifuge and wherein the volumetric flow of the liquid is fed in a timed manner continuously or batchwise.

No. of Pages : 18 No. of Claims : 19

(12) PATENT APPLICATION PUBLICATION
(19) INDIA
(22) Date of filing of Application :18/07/2013
(21) Application No.5696/CHENP/2013 A
(43) Publication Date : 05/09/2014

(54) Title of the invention : PROCESSES FOR PRODUCING FERMENTATION PRODUCTS

(51) International classification :C12P7/06
(31) Priority Document No :61/426039
(32) Priority Date :22/12/2010
(33) Name of priority country :U.S.A.
(86) International Application No :PCT/US2011/066559
Filing Date :21/12/2011
(87) International Publication No :WO 2012/088303
(61) Patent of Addition to Application Number :NA
Filing Date :NA
(62) Divisional to Application Number :NA
Filing Date :NA

(71)**Name of Applicant :**
1)NOVOZYMES NORTH AMERICA INC.
Address of Applicant :77 Perry Chapel Church Rd. P.O. Box 576 Franklinton North Carolina 27525 U.S.A.
2)NOVOZYMES A/S
(72)**Name of Inventor :**
1)DEINHAMMER Randy
2)CLARK Suzanne
3)QUIROS Mauricio
4)MATTHEWS John
5)HJULMAND Anne Glud
6)SOONG Chee Leong
7)MATSUI Tomoko
8)TAKAGI Shinobu

(57) Abstract :
The present invention relates to processes for producing fermentation products from starch containing material wherein a thermostable alpha amylase and optionally a thermostable protease are present and/or added during liquefaction. The invention also relates to a composition suitable for use in a process of the invention.

No. of Pages : 126 No. of Claims : 25

(12) PATENT APPLICATION PUBLICATION
(19) INDIA
(22) Date of filing of Application :18/07/2013
(21) Application No.5697/CHENP/2013 A
(43) Publication Date : 05/09/2014

(54) Title of the invention : GUIDER FOR CONVEYING SHEET SHAPED OBJECT

(51) International classification :B65H29/60
(31) Priority Document No :201110092139.X
(32) Priority Date :13/04/2011
(33) Name of priority country :China
(86) International Application No :PCT/CN2012/073094
Filing Date :27/03/2012
(87) International Publication No :WO 2012/139459
(61) Patent of Addition to Application Number :NA
Filing Date :NA
(62) Divisional to Application Number :NA
Filing Date :NA

(71)**Name of Applicant :**
1)GRG BANKING EQUIPMENT CO. LTD.
Address of Applicant :9 Kelin Road Science City Luogang District Guangzhou Guangdong 510663 China
(72)**Name of Inventor :**
1)YIN Guangjun
2)TAN Dong
3)WU En

(57) Abstract :
A guider for conveying a sheet shaped object comprises two side plates; two wheel components arranged in parallel between the two side plates a top channel plate being disposed on a top portion of the wheel components; and a lifting channel plate disposed between the two wheel components and the top channel plate the lifting channel plate forming a horizontal channel with the top channel plate and respectively forming lateral channels with the two wheel components. The lifting channel plate is disposed on the two side plates in a height adjustable manner. The guider further comprises: a first driving device for driving the lifting channel plate to move up and down; a reversing member hinged between the two lateral channels and used for switch between the two lateral channels; and a second driving device for driving the reversing member to rotate. The guider for conveying a sheet shaped object of the present invention simplifies the structure of the guider and meanwhile reduces the manufacturing cost of the guider.

No. of Pages : 23 No. of Claims : 10

(12) PATENT APPLICATION PUBLICATION
(19) INDIA
(22) Date of filing of Application :08/07/2013
(21) Application No.5367/CHENP/2013 A
(43) Publication Date : 05/09/2014

(54) Title of the invention : HLA BINDING PEPTIDES DERIVED FROM PROSTATE ASSOCIATED ANTIGENIC MOLECULES AND METHODS OF USE THEREOF

(51) International classification :A61K39/00,C07K14/47,C07K14/705
(31) Priority Document No :PCT/EP2010/069675
(32) Priority Date :14/12/2010
(33) Name of priority country :EPO
(86) International Application No :PCT/EP2011/070024
Filing Date :14/11/2011
(87) International Publication No :WO 2012/079878
(61) Patent of Addition to Application Number :NA
Filing Date :NA
(62) Divisional to Application Number :NA
Filing Date :NA

(71)**Name of Applicant :**
1)IMMATICS BIOTECHNOLOGIES GMBH
Address of Applicant :Paul Ehrlich Strasse 15 72076 Tuebingen Germany
(72)**Name of Inventor :**
1)WEINSCHENK Toni
2)LEWANDROWSKI Peter
3)RAMMENSEE Hans Georg
4)STEVANOVIC Stefan
5)GOUTTEFANGEAS Ccile

(57) Abstract :
Methods and compositions for immunotherapeutic treatment of prostate cancer are disclosed. More specifically methods of treating patients with prostate cancer comprising administering compositions comprising HLA binding peptides derived from prostate associated antigenic molecules either with or without immunological adjuvants are disclosed.

No. of Pages : 98 No. of Claims : 15

(12) PATENT APPLICATION PUBLICATION
(19) INDIA
(22) Date of filing of Application :17/07/2013
(21) Application No.5716/CHENP/2013 A
(43) Publication Date : 05/09/2014

(54) Title of the invention : INFORMATION TRANSMITTING METHOD DEVICE AND SYSTEM

(51) International classification :H04W4/12
(31) Priority Document No :201110005298.1
(32) Priority Date :12/01/2011
(33) Name of priority country :China
(86) International Application No :PCT/CN2011/084256
Filing Date :20/12/2011
(87) International Publication No :WO 2012/094938
(61) Patent of Addition to Application Number :NA
Filing Date :NA
(62) Divisional to Application Number :NA
Filing Date :NA

(71)**Name of Applicant :**
1)TENCENT TECHNOLOGY (SHENZHEN) COMPANY LIMITED
Address of Applicant :Room 403 East Block 2 SEG Park Zhenxing Road Futian District Shenzhen Guangdong 518044 China
(72)**Name of Inventor :**
1)HU Peng

(57) Abstract :
Disclosed is an information transmitting method comprising: acquiring an area awaiting transmission of a piece of information awaiting transmission; confirming a first base station identifier corresponding to the area awaiting transmission; acquiring a first unique user identifier corresponding to the first base station identifier; and transmitting the information awaiting transmission to a mobile terminal of a first user the first user being the user identified by the first unique user identifier. Also disclosed is an information transmitting device comprising: an area awaiting transmission acquisition module a user identifier confirmation module and an information awaiting transmission transmitting module. In embodiments of the present invention the first base station identifier corresponding to the area awaiting transmission is confirmed by confirming the first base station identifier corresponding to the area awaiting transmission acquiring the first unique user identifier corresponding to the first base station identifier and transmitting the information awaiting transmission to a mobile terminal of a first user thus allowing a server to acquire information on the current actual geographical location of the mobile terminal user. This allows for improved precision of information transmission to mobile terminal user on the basis of area and improved effect of information delivery.

No. of Pages : 28 No. of Claims : 15

(12) PATENT APPLICATION PUBLICATION
(19) INDIA
(22) Date of filing of Application :17/07/2013
(21) Application No.5717/CHENP/2013 A
(43) Publication Date : 05/09/2014

(54) Title of the invention : PROCESS AND APPARATUS FOR GENERATING WORK

(51) International classification :F01K11/04,F25B3/00,F02C1/04
(31) Priority Document No :11155064.6
(32) Priority Date :18/02/2011
(33) Name of priority country :EPO
(86) International Application No :PCT/EP2012/052569
Filing Date :15/02/2012
(87) International Publication No :WO 2012/110546
(61) Patent of Addition to Application Number :NA
Filing Date :NA
(62) Divisional to Application Number :NA
Filing Date :NA

(71)**Name of Applicant :**
1)HELEOS TECHNOLOGY GMBH
Address of Applicant :Schmidgasse 3 CH 6300 Zug Switzerland
(72)**Name of Inventor :**
1)HOOS Frank

(57) Abstract :
The invention relates to a process and apparatus (10) for generating work the apparatus (10) comprising at least one circuit for processing a working fluid in a thermodynamic cycle and mounted in a frame (11A) rotatable about an axis of rotation (12) the at least one circuit comprising a compressor (13) for increasing the pressure in the working fluid one or more expanders (17) in on or downstream from the compressor (13) and extending in a direction having a tangential component at least one channel (22) for the working fluid a heat exchanger (18) for heating the accelerating working fluid in the channel (22) and a turbine (16) for generating work.

No. of Pages : 18 No. of Claims : 15

(12) PATENT APPLICATION PUBLICATION
(19) INDIA
(22) Date of filing of Application :17/07/2013
(21) Application No.5718/CHENP/2013 A
(43) Publication Date : 05/09/2014

(54) Title of the invention : METHODS AND APPARATUS FOR SIMULTANEOUS TRANSMISSION AND RECEPTION OF A DATA SEQUENCE AND CHANNEL INFORMATION FOR LINK ADAPTATION

(51) International classification :H04L1/00
(31) Priority Document No :11290036.0
(32) Priority Date :21/01/2011
(33) Name of priority country :EPO
(86) International Application No :PCT/EP2011/073062
Filing Date :16/12/2011
(87) International Publication No :WO 2012/097936
(61) Patent of Addition to Application Number :NA
Filing Date :NA
(62) Divisional to Application Number :NA
Filing Date :NA

(71)**Name of Applicant :**
1)ALCATEL LUCENT
Address of Applicant :3 avenue Octave Grard F 75007 Paris France
(72)**Name of Inventor :**
1)SANTOS Andr F.D.
2)WILD Thorsten
3)VALENTIN Stefan

(57) Abstract :
The present invention refers to methods and apparatus for simultaneous transmission and reception of a data sequence (d) and channel information (CI) for link adaptation. In order to provide a method a transmitter element (34) and a receiver element (38) that consume less transmission resources and improve the overall spectral efficiency of the network a method and a transmitter element (34) for simultaneous transmission of a data sequence (d) and channel information (CI) for link adaptation over a radio channel (29) of a wireless network (11) is suggested the method comprising encoding said data sequence to a codeword (c) using a channel encoder (19) and transmitting (21) the codeword (c) over the radio channel (29) wherein the method further comprises including the channel information (CI) into the codeword (c) using said channel encoder (19) the codeword (c) comprising both the data sequence (d) and the channel information (CI). Furthermore a corresponding method and receiver element (38) for receiving and decoding the transmitted codeword (c) are suggested.

No. of Pages : 26 No. of Claims : 15

(12) PATENT APPLICATION PUBLICATION
(19) INDIA
(22) Date of filing of Application :12/07/2013
(21) Application No.5532/CHENP/2013 A
(43) Publication Date : 05/09/2014

(54) Title of the invention : DEVICE FOR CONTROLLING THE ALARM LIMIT OF AN ALARM DEVICE

(51) International classification :G06F19/00
(31) Priority Document No :10195673.8
(32) Priority Date :17/12/2010
(33) Name of priority country :EPO
(86) International Application No :PCT/IB2011/055665
Filing Date :14/12/2011
(87) International Publication No :WO 2012/080963
(61) Patent of Addition to Application Number :NA
Filing Date :NA
(62) Divisional to Application Number :NA
Filing Date :NA

(71)**Name of Applicant :**
1)KONINKLIJKE PHILIPS ELECTRONICS N.V.
Address of Applicant :High Tech Campus 5 NL 5656 AE Eindhoven Netherlands
2)PHILIPS INTELLECTUAL PROPERTY & STANDARDS GMBH
(72)**Name of Inventor :**
1)TIVIG Gerhard
2)NEUMANN Rolf
3)SPAETH Michael Mathias
4)GREINER Harald
5)GEGNER Guenter

(57) Abstract :
A controlling device (110)is configured for controlling a state of an alarm limit of an alarm device (108). The alarm device (108) is configured for generating an alarm signal in association with a monitored physiological parameter of a patient. The alarm limit triggers the generation of the alarm signal. In order to automatically control the state of the alarm limit the controlling device (110)comprises a receiving unit(146) configured for receiving information indicating an administration of a treatment to the patient a determining unit (148) configured for determining whether the treatment is administered to the patient based on the received information and a controlling unit (150) configured for controlling the state of the alarm limit based on a result of the determination of the determining unit (148).

No. of Pages : 27 No. of Claims : 15

(12) PATENT APPLICATION PUBLICATION
(19) INDIA
(22) Date of filing of Application :18/07/2013
(21) Application No.5755/CHENP/2013 A
(43) Publication Date : 05/09/2014

(54) Title of the invention : SLIDING DEVICE FOR CARRYING BREAKER

(51) International classification :H01H71/02
(31) Priority Document No :201010602222.2
(32) Priority Date :23/12/2010
(33) Name of priority country :China
(86) International Application No :PCT/CN2011/084438
Filing Date :22/12/2011
(87) International Publication No :WO 2012/083867
(61) Patent of Addition to Application Number :NA
Filing Date :NA
(62) Divisional to Application Number :NA
Filing Date :NA

(71)**Name of Applicant :**
1)SCHNEIDER ELECTRIC INDUSTRIES SAS
Address of Applicant :35 rue Joseph Monier Rueil Malmaison F 92500 France
(72)**Name of Inventor :**
1)LIU Zhenzhong
2)YIN Yan
3)FERRAND Jean Paul
4)VACHER Richard

(57) Abstract :
The present invention discloses a sliding device for carrying a breaker comprising a sliding plate and lock mechanism the sliding plate having a first face and a second face opposite to the first face. A sliding mechanism and a carrier are positioned on the sliding plate. The sliding mechanism is slidably connected to a chassis and the carrier is used to carry the breaker on the second face of the sliding plate. The lock mechanism is positioned on the first face of the sliding plate and used to lock the sliding plate to the chassis. It since employs a structural design with a single sliding plate and no additional assembling parts and a simple lock mechanism positioned on the sliding plate to cooperate with the chassis to realize a simpler structure less assembly tolerance and more convenient assembling process thereby reducing the cost.

No. of Pages : 21 No. of Claims : 18

(12) PATENT APPLICATION PUBLICATION
(19) INDIA
(22) Date of filing of Application :18/07/2013
(21) Application No.5757/CHENP/2013 A
(43) Publication Date : 05/09/2014

(54) Title of the invention : ABSOLUTE GRAVIMETRIC MEASUREMENT DEVICE BY ATOMIC INTERFEROMETRY FOR GEOPHYSICAL APPLICATIONS PARTICULARLY FOR MONITORING HYDROCARBON RESERVOIRS

(51) International classification :G01V7/00
(31) Priority Document No :MI2010A002453
(32) Priority Date :29/12/2010
(33) Name of priority country :Italy
(86) International Application No :PCT/IB2011/055814
Filing Date :20/12/2011
(87) International Publication No :WO 2012/090121
(61) Patent of Addition to Application Number :NA
Filing Date :NA
(62) Divisional to Application Number :NA
Filing Date :NA

(71)**Name of Applicant :**
1)ENI S.P.A.
Address of Applicant :Piazzale E. Mattei 1 I 00144 Roma Italy
(72)**Name of Inventor :**
1)ITALIANO Francesco
2)ANTONELLI Massimo
3)TINO Guglielmo Maria Lucio
4)SORRENTINO Fiodor
5)DE ANGELIS Marella

(57) Abstract :
Absolute gravimetric measurement device (10) of the type comprising arranged in downward succession along the vertical direction a laser system (13) a supporting surface (16) of said laser system (13) an ultra vacuum system (14) a retroreflective mirror (21) and a seismic attenuation system (15) said seismic attenuation system (15) comprising an upper plate (1002) equipped with a hole (1003) above which said retroreflective mirror (21) is kept suspended by means of at least three metallic blades (70 71 72) said three metallic blades (70 71 72) comprising first ends constrained to the periphery of said plate (1002) and second ends inciding above said hole (1003) in correspondence with said retroreflective mirror (21) said metallic blades (70 71 72) being configured to form a spring antispring geometry for damping the vibrations of the retroreflective mirror (21) along said vertical direction wherein said absolute gravimetric measurement device (10) also comprises means for the leveling of said retroreflective mirror (21) integral with said seismic attenuation system (15) and radial constraining means between said retroreflective mirror (21) and said upper plate (1002) acting in the plane orthogonal to the vertical direction.

No. of Pages : 59 No. of Claims : 9

(12) PATENT APPLICATION PUBLICATION
(19) INDIA
(22) Date of filing of Application :18/07/2013
(21) Application No.5758/CHENP/2013 A
(43) Publication Date : 05/09/2014

(54) Title of the invention : METHOD FOR REMOVING N2O AND X FROM THE NITRIC ACID PRODUCTION PROCESS AND AN INSTALLATION SUITABLE FOR SAME

(51) International classification :C01B21/26,C01B21/38,B01D53/86
(31) Priority Document No :10 2011 011 881.0
(32) Priority Date :21/02/2011
(33) Name of priority country :Germany
(86) International Application No :PCT/EP2012/000642
Filing Date :14/02/2012
(87) International Publication No :WO 2012/113516
(61) Patent of Addition to Application Number :NA
Filing Date :NA
(62) Divisional to Application Number :NA
Filing Date :NA

(71)**Name of Applicant :**
1)ThyssenKrupp Uhde GmbH
Address of Applicant :Friedrich Uhde Strasse 15 44141 Dortmund Germany
(72)**Name of Inventor :**
1)SCHWEFER Meinhard
2)SIEFERT Rolf
3)FUCHS J¼rgen
4)RUTHARDT Klaus
5)GROVES Michael

(57) Abstract :
The invention relates to a method for producing nitric acid by catalytically oxidising NH with oxygen and then reacting the obtained with an absorption agent in an absorption tower said tower comprising a catalyst bed for NO decomposition arranged in the process gas after the catalytic NH oxidation and before the absorption tower in the direction of flow and a catalyst bed for reduction and further NO reduction arranged in the residual gas after the absorption tower in the direction of flow. In the catalyst bed for NO decomposition that is arranged in the process gas as much NO as possible is broken down such that before the residual gas enters the catalyst bed for reduction the NO content is at > 100 ppmv and a molar NO/ ratio of > 0.25 is the result; the catalyst bed for reduction and further NO reduction arranged in the residual gas containing at least one zeolite catalyst loaded with iron; there being such an amount of NH added to the residual gas prior to entry into the catalyst bed that upon exit from the catalyst bed an concentration of < 40 ppmv results; and the operating parameters being selected so as to produce an NO concentration of <200 ppmv. The invention additionally relates to a nitric acid installation in which the NO formed during the catalytic NH oxidation is catalytically removed in the process gas with the content being reduced and the NO content being further reduced in the residual gas downstream of the absorption tower and which is characterised in that at least the following elements are present: A) a reactor for the catalytic oxidation of NH with oxygen to produce a process gas containing B) an absorption tower for reacting the obtained from the process gas with an absorption agent a residual gas containing and NO being the result C) at least one first catalyst bed for NO decomposition through which the process gas flows and which is arranged after the catalytic NH oxidation and before the absorption tower in the direction of flow D) at least one second catalyst bed for reduction and further NO reduction through which the residual gas flows and which is arranged after the absorption tower in the direction of flow E) at least one device for feeding a gaseous reduction agent into the residual gas arranged after the absorption tower and before the second catalyst bed in the direction of flow F) the first catalyst bed containing a catalyst for decomposing NO and G) the second catalyst bed containing a catalyst which contains at least one zeolite loaded with iron. The method and installation allow NO and emissions from nitric acid installations to be reduced in a particularly efficient manner.

No. of Pages : 28 No. of Claims : 22

(12) PATENT APPLICATION PUBLICATION
(19) INDIA
(22) Date of filing of Application :09/07/2013
(21) Application No.5421/CHENP/2013 A
(43) Publication Date : 05/09/2014

(54) Title of the invention : MEMORY WIRE TERMINATOR

(51) International classification :E05B65/46,A47F1/00,A47B67/02
(31) Priority Document No :13/012721
(32) Priority Date :24/01/2011
(33) Name of priority country :U.S.A.
(86) International Application No :PCT/US2012/022243
Filing Date :23/01/2012
(87) International Publication No :WO 2012/103021
(61) Patent of Addition to Application Number :NA
Filing Date :NA
(62) Divisional to Application Number :NA
Filing Date :NA

(71)**Name of Applicant :**
1)CAREFUSION 303 INC.
Address of Applicant :3750 Torrey Valley Court San Diego California 92129 U.S.A.
(72)**Name of Inventor :**
1)WEBER Frank Dean
2)RAHILLY Michael

(57) Abstract :
A container for use in a dispensing system is disclosed. The container comprises a body a linkage element movably attached to the body a control module and an actuator comprising a memory wire having a length and a terminator that is attached to the memory wire. The linkage element has a first position and a second position and the actuator is mechanically coupled to the linkage element. The control module is attached to the body and comprises a contact element. The terminator is attached to the body and electrically coupled to the contact element wherein the electrical coupling between the memory wire and the contact element is mechanically compliant such that the position of the terminator relative to the body is invariant when the position of the control module relative to the body varies.

No. of Pages : 35 No. of Claims : 20

(12) PATENT APPLICATION PUBLICATION
(19) INDIA
(22) Date of filing of Application :19/07/2013
(21) Application No.5765/CHENP/2013 A
(43) Publication Date : 05/09/2014

(54) Title of the invention : FAST DUAL CONTRAST MR IMAGING

(51) International classification :G01R33/563,G01R33/561
(31) Priority Document No :10196091.2
(32) Priority Date :21/12/2010
(33) Name of priority country :EPO
(86) International Application No :PCT/IB2011/055561
Filing Date :09/12/2011
(87) International Publication No :WO 2012/085733
(61) Patent of Addition to Application Number :NA
Filing Date :NA
(62) Divisional to Application Number :NA
Filing Date :NA

(71)**Name of Applicant :**
1)KONINKLIJKE PHILIPS ELECTRONICS N.V.
Address of Applicant :High Tech Campus 5 NL 5656 AE Eindhoven Netherlands
(72)**Name of Inventor :**
1)GEERTS OSSEVOORT Liesbeth
2)VISSER Frederik

(57) Abstract :
The invention relates to a method of MR imaging of at least a portion of a body (10) of a patient placed in an examination volume of a MR device (1). The method comprises the steps of: subjecting the portion of the body (10) to a first imaging sequence for acquiring a first signal data set (31 32) from a central portion of k space wherein magnetic resonance is excited by means of RF pulses having a large flip angle (a); subjecting the portion of the body (10) to a second imaging sequence for acquiring a second signal data set (33 34) from the central portion of k space wherein magnetic resonance is excited by means of RF pulses having a small flip angle (a); subjecting the portion of the body (10) to a third imaging sequence for acquiring a third signal data set (35 36) at least from a peripheral portion of k space wherein magnetic resonance is excited by means of RF pulses having an intermediate flip angle (a 3); reconstructing a first MR image (37) from a combination of the first signal data set (31 32) and the third signal data set (35 36) and reconstructing a second MR image (38) from a combination of the second signal data set (33 34) and the third signal data set (35 36).

No. of Pages : 16 No. of Claims : 12

(12) PATENT APPLICATION PUBLICATION
(21) Application No.5767/CHENP/2013 A
(19) INDIA
(22) Date of filing of Application :19/07/2013
(43) Publication Date : 05/09/2014

(54) Title of the invention : SYSTEM AND METHOD FOR AUTOMATIC GENERATION OF INITIAL RADIATION TREATMENT PLANS

(51) International classification :G06T7/00,G06K9/62
(31) Priority Document No :61/424845
(32) Priority Date :20/12/2010
(33) Name of priority country :U.S.A.
(86) International Application No :PCT/IB2011/055507
Filing Date :07/12/2011
(87) International Publication No :WO 2012/085722
(61) Patent of Addition to Application Number :NA
Filing Date :NA
(62) Divisional to Application Number :NA
Filing Date :NA

(71)**Name of Applicant :**
1)KONINKLIJKE PHILIPS ELECTRONICS N.V.
Address of Applicant :High Tech Campus 5 NL 5656 AE Eindhoven Netherlands
(72)**Name of Inventor :**
1)LEE Michael Chun Chieh
2)BOROCZKY Lills

(57) Abstract :
A non transitory computer readable storage medium storing a set of instructions executable by a processor. The set of instructions is operable to receive a current patient medical image of a current patient compare the current patient medical image to a plurality of previous patient medical images each of the previous patient medical images corresponding to a previous patient select one of the previous patients based on a geometric similarity between the previous patient medical image of the selected one of the previous patients and the current patient medical image and determine an initial radiation treatment plan based on a radiation treatment plan of the selected one of the previous patients.

No. of Pages : 18 No. of Claims : 24

(12) PATENT APPLICATION PUBLICATION
(19) INDIA
(22) Date of filing of Application :19/07/2013
(21) Application No.5769/CHENP/2013 A
(43) Publication Date : 05/09/2014

(54) Title of the invention : DEVICE AND METHOD FOR CONTROLLING CURRENT TO SOLID STATE LIGHTING CIRCUIT

(51) International classification :H05B33/08
(31) Priority Document No :61/425334
(32) Priority Date :21/12/2010
(33) Name of priority country :U.S.A.
(86) International Application No :PCT/IB2011/055747
Filing Date :16/12/2011
(87) International Publication No :WO 2012/085800
(61) Patent of Addition to Application Number :NA
Filing Date :NA
(62) Divisional to Application Number :NA
Filing Date :NA

(71)**Name of Applicant :**
1)KONINKLIJKE PHILIPS ELECTRONICS N.V.
Address of Applicant :High Tech Campus 5 NL 5656 AE Eindhoven Netherlands
2)PHILIPS INTELLECTUAL PROPERTY & STANDARDS GMBH
(72)**Name of Inventor :**
1)RADERMACHER Harald Josef G¼nther

(57) Abstract :
A device for controlling current to a solid state lighting load includes a capacitor (241 341) and a current source(245 345). The capacitor is connected in a parallel arrangement with the solid state lighting load(260 360). The current source is connected in series with the parallel arrangement of the capacitor and the solid state lighting load. The current source is configured to modulate dynamically an amplitude of an input current provided to the parallel arrangement of the capacitor and the solid state lighting load based on an input voltage.

No. of Pages : 36 No. of Claims : 20

(12) PATENT APPLICATION PUBLICATION
(19) INDIA
(22) Date of filing of Application :06/03/2013
(21) Application No.1822/CHENP/2013 A
(43) Publication Date : 05/09/2014

(54) Title of the invention : PROTECTIVE CAP FOR AN INSERTION DEVICE AND OTHER INSERTION DEVICE FEATURES

(51) International classification :A61F2/16,A61F9/00,A61M5/32
(31) Priority Document No :61/376661
(32) Priority Date :24/08/2010
(33) Name of priority country :U.S.A.
(86) International Application No:PCT/US2011/049029
Filing Date :24/08/2011
(87) International Publication No :WO 2012/027517
(61) Patent of Addition to Application Number :NA
Filing Date :NA
(62) Divisional to Application Number :NA
Filing Date :NA

(71)**Name of Applicant :**
1)ABBOTT MEDICAL OPTICS INC.
Address of Applicant :1700 E. St. Andrew Place Santa Ana CA 92705 U.S.A.
(72)**Name of Inventor :**
1)ANDERSON Steven R.
2)RUDDOCKS David A.
3)GAYLORD David W.
4)COLE Mark S.

(57) Abstract :
A protective cap having finger grips a window and port. The protective cap may also have one or more clips (or snaps) one or more relief slots and/or one or more guides. Protective cap 200 may also have a fill indicator and/ or a material relief. An insertion system having a handpiece a pushrod assembly a cartridge and a cap with a window and a port. The cap is configured and dimensioned to couple with the distal end of the cartridge. The insertion system may also have a pushrod with a plunger having a marker configured and dimensioned to indicate axially translation of the pushrod assembly within the handpiece.

No. of Pages : 90 No. of Claims : 25

(12) PATENT APPLICATION PUBLICATION
(19) INDIA
(22) Date of filing of Application :30/05/2013
(21) Application No.4163/CHENP/2013 A
(43) Publication Date : 05/09/2014

(54) Title of the invention : OPTICAL IMAGING SYSTEM

(51) International classification :A61B3/12
(31) Priority Document No :1018560.1
(32) Priority Date :03/11/2010
(33) Name of priority country :U.K.
(86) International Application No :PCT/EP2011/069375
Filing Date :03/11/2011
(87) International Publication No :WO 2012/059564
(61) Patent of Addition to Application Number :NA
Filing Date :NA
(62) Divisional to Application Number :NA
Filing Date :NA

(71)**Name of Applicant :**
1)CITY UNIVERSITY
Address of Applicant :Northampton Square London EC1V 0HB U.K.
(72)**Name of Inventor :**
1)GRUPPETTA Stephen

(57) Abstract :
An optical imaging system (1) for in vivo retinal imaging the system (1) comprising: an optical source (3) for generating incoherent light in a plurality of wavelength bands; an optical imaging sub system (6) configured to split light from said optical source (3) into a plurality of beams to introduce a path difference between said beams of light and recombine those beams to form interference fringes that are imaged on a subject (21); and an image capture device (29) configured to capture light from the subject (21) being imaged and to form an image of said subject (21).

No. of Pages : 32 No. of Claims : 35

(12) PATENT APPLICATION PUBLICATION
(19) INDIA
(22) Date of filing of Application :28/06/2013
(21) Application No.5091/CHENP/2013 A
(43) Publication Date : 05/09/2014

(54) Title of the invention : IN SITU SAMPLING AND ANALYSIS SYSTEM FOR A DRILL RIG AND A DRILL RIG INCORPORATING SAME

(51) International classification :E21B21/01,E21B15/00,E21B7/00
(31) Priority Document No :2011900230
(32) Priority Date :25/01/2011
(33) Name of priority country :Australia
(86) International Application No :PCT/AU2012/000015
Filing Date :11/01/2012
(87) International Publication No :WO 2012/100283
(61) Patent of Addition to Application Number :NA
Filing Date :NA
(62) Divisional to Application Number :NA
Filing Date :NA

(71)**Name of Applicant :**
1)TECHNOLOGICAL RESOURCES PTY LIMITED
Address of Applicant :123 Albert Street Brisbane QLD 4000 Australia
(72)**Name of Inventor :**
1)KOSTARELAS Michael
2)ROESNER Matthew Kenneth
3)CARTER Geoffrey Alan
4)GREEN Craig
5)MURFIT Ian

(57) Abstract :
An in situ sampling and analysis system 10 is supported by a drill rig 12. The system 10 incorporates a frame 26 which carries equipment capable of sampling and analysing drill cuttings produced during drilling. This equipment includes a drill cutting handling system 28 and an emission spectrometer 30. The frame 26 is moveable to an operational position which facilitates the acquiring samples of the drill cuttings and conducting an elemental analysis of the cuttings. Prior to the drill rig 12 being trammed to the desired location for drilling of a further hole the frame 26 is elevated with respect to the operational position to retract the equipment from ground level. The sampling of drill cuttings and determination of the composition of a mineral body is performed in real time simultaneously with the drilling.

No. of Pages : 34 No. of Claims : 49

(12) PATENT APPLICATION PUBLICATION
(19) INDIA
(22) Date of filing of Application :09/07/2013
(21) Application No.5434/CHENP/2013 A
(43) Publication Date : 05/09/2014

(54) Title of the invention : METHOD OF DESULFURIZING STEEL

(51) International classification :C21C7/064
(31) Priority Document No :13/007163
(32) Priority Date :14/01/2011
(33) Name of priority country :U.S.A.
(86) International Application No :PCT/AU2012/000019
Filing Date :12/01/2012
(87) International Publication No :WO 2012/094705
(61) Patent of Addition to Application Number :NA
Filing Date :NA
(62) Divisional to Application Number :NA
Filing Date :NA

(71)**Name of Applicant :**
1)BLUESCOPE STEEL LIMITED
Address of Applicant :Level 11 120 Collins Street Melbourne Victoria 3000 Australia
2)IHI CORPORATION
3)NUCOR CORPORATION
(72)**Name of Inventor :**
1)PANDA Dhiren
2)ROSS Neal
3)MCQUILLIS Gary
4)JENKINS Jerome

(57) Abstract :
A method of desulfurizing steel including steps of forming a slag over a molten steel drawing a vacuum to less than 5 torr over the slag and molten steel stirring the molten steel and slag and deoxidizing and desulfurizing the molten steel and slag to degas the steel reducing at least sulfur nitrogen oxygen and hydrogen contents and reducing activity of oxygen in the molten metal to less than 30 ppm. The method includes forming a slag composition after degassing the steel comprising CaO between 50 and 70% by weight Si0 between 20 and 28% by weight CaFbetween 5 and 15% by weight MgO not more than 8% by weight AIO not more than 1% by weight and a combination of FeO + MnO not more than 2% by weight where the sum of CaO +CaF + Si0 + MgO is at least 85% by weight.

No. of Pages : 32 No. of Claims : 20

(12) PATENT APPLICATION PUBLICATION
(19) INDIA
(22) Date of filing of Application :19/07/2013
(21) Application No.5777/CHENP/2013 A
(43) Publication Date : 05/09/2014

(54) Title of the invention : PATIENT CONDITION DETECTION AND MORTALITY

(51) International classification :G06F19/30
(31) Priority Document No :61/425388
(32) Priority Date :21/12/2010
(33) Name of priority country :U.S.A.
(86) International Application No :PCT/IB2011/055610
Filing Date :12/12/2011
(87) International Publication No :WO 2012/085750
(61) Patent of Addition to Application Number :NA
Filing Date :NA
(62) Divisional to Application Number :NA
Filing Date :NA

(71)**Name of Applicant :**
1)KONINKLIJKE PHILIPS ELECTRONICS N.V.
Address of Applicant :High Tech Campus 5 NL 5656 AE Eindhoven Netherlands
(72)**Name of Inventor :**
1)CHBAT Nicolas Wadih

(57) Abstract :
When prediction onset of a medical condition for a patient multiple sources of knowledge (112) are aggregated and modeled into a format that is usable by multiple algorithms including an inference algorithm (134) a Bayesian network (136) and a state machine (138). The outputs (116) of the multiple algorithms are then combined to more accurately predict condition onset. For instance several knowledge sources can be input to each of the inference algorithm the Bayesian network and the finite state machine and the outputs of each algorithm are combined optionally weighted etc. to make a final determination of the likelihood that the patient has or will imminently have the specified medical condition.

No. of Pages : 21 No. of Claims : 19

(12) PATENT APPLICATION PUBLICATION
(19) INDIA
(22) Date of filing of Application :03/07/2013
(21) Application No.5201/CHENP/2013 A
(43) Publication Date : 05/09/2014

(54) Title of the invention : MEDICAL INJECTION DEVICE

(51) International classification :A61M5/00,A61M5/32,A61M5/24
(31) Priority Document No :10197464.0
(32) Priority Date :31/12/2010
(33) Name of priority country :EPO
(86) International Application No :PCT/EP2011/074255
Filing Date :29/12/2011
(87) International Publication No :WO 2012/089821
(61) Patent of Addition to Application Number :NA
Filing Date :NA
(62) Divisional to Application Number :NA
Filing Date :NA

(71)**Name of Applicant :**
1)NOVO NORDISK A/S
Address of Applicant :Novo All DK 2880 Bagsv¦rd Denmark
(72)**Name of Inventor :**
1)RADMER Bo
2)PLAMBECH Christian
3)NIELSEN Christian H¸jris
4)WINDUM Jesper Peter
5)MARKUSSEN Tom Hede

(57) Abstract :
The present invention relates to injection devices for injecting a dose of a medicament. The injection device (100) incorporates a housing (101) a needle assembly (150) and a cover (200). The needle assembly (150) comprises an injection needle (152 153) accommodated in a needle container (151) having an opening which in a storage state of the injection device (100) is sealed by a film seal (155). The cover may include sections (201 202) arranged movable relative to the housing (101). The injection device (100) is so configured that upon movement of the cover sections (201 202) relative to the housing (101) the film seal (155) is changed from a sealing state to an unsealing state for shifting the injection device (100) into a ready to administer state.

No. of Pages : 29 No. of Claims : 15

(12) PATENT APPLICATION PUBLICATION
(19) INDIA
(22) Date of filing of Application :03/07/2013
(21) Application No.5202/CHENP/2013 A
(43) Publication Date : 05/09/2014

(54) Title of the invention : ID GROUPING METHOD AT PHYSICAL LAYER CELL AND SCRAMBLING CODE ALLOCATION METHOD AND SYSTEM

(51) International classification :H04W16/10,H04W72/10
(31) Priority Document No :201010618559.2
(32) Priority Date :31/12/2010
(33) Name of priority country :China
(86) International Application No :PCT/CN2011/084326
Filing Date :21/12/2011
(87) International Publication No :WO 2012/089052
(61) Patent of Addition to Application Number :NA
Filing Date :NA
(62) Divisional to Application Number :NA
Filing Date :NA

(71)**Name of Applicant :**
1)CHINA MOBILE GROUP DESIGN INSTITUTE CO.LTD
Address of Applicant :16A Danling Street Haidian District Beijing 100080 China
(72)**Name of Inventor :**
1)SUN Hao
2)CHEN Yanlei
3)DONG Jiangbo
4)LI Nan
5)ZHAO Pei
6)GAO Peng

(57) Abstract :
Disclosed are an ID grouping method at a physical layer cell and a scrambling code allocation method and system. The ID grouping method at a physical layer cell comprises: determining each scrambling code used in each channel by using each allocable physical layer cell ID for each channel among multiple designated cells; determining a correlative index value between every two scrambling codes among the scrambling codes used in each channel; categorizing the determined correlative index value in each preset index value interval; and based on a categorization result allocating each physical layer cell ID into each physical layer cell ID group. The technical solutions of the present invention solve the problem that the scrambling codes cannot be properly allocated for an LTE system in the prior art.

No. of Pages : 33 No. of Claims : 14

(12) PATENT APPLICATION PUBLICATION
(19) INDIA
(22) Date of filing of Application :09/07/2013
(21) Application No.5436/CHENP/2013 A
(43) Publication Date : 05/09/2014

(54) Title of the invention : GLYCOSIDE BLENDS

(51) International classification :C07H15/207
(31) Priority Document No :61/422523
(32) Priority Date :13/12/2010
(33) Name of priority country :U.S.A.
(86) International Application No :PCT/US2011/064528
Filing Date :13/12/2011
(87) International Publication No :WO 2012/082677
(61) Patent of Addition to Application Number :NA
Filing Date :NA
(62) Divisional to Application Number :NA
Filing Date :NA

(71)**Name of Applicant :**
1)CARGILL INCORPORATED
Address of Applicant :15407 McGinty Road West Mail Stop 24 Wayzata Minnesota 55391 U.S.A.
(72)**Name of Inventor :**
1)CARLSON Ting Liu
2)GUTHRIE Brian D.
3)LINDGREN Timothy
4)MORTENSON Michael

(57) Abstract :
Sweetener compositions comprising particular glycoside blends are described in this paper. The glycioside blends comprise rebaudioside A rebaudioside B and/or rebaudioside D in various proportions. The sweetener composition can also include one or more bulking agents or other ingredients. The sweetener compositions can be used in foods and beverages.

No. of Pages : 32 No. of Claims : 24

(12) PATENT APPLICATION PUBLICATION
(21) Application No.5437/CHENP/2013 A
(19) INDIA
(22) Date of filing of Application :09/07/2013
(43) Publication Date : 05/09/2014

(54) Title of the invention : MOTION VECTOR PREDICTION

(51) International classification :H04N7/26,H04N7/50
(31) Priority Document No :61/435204
(32) Priority Date :21/01/2011
(33) Name of priority country :U.S.A.
(86) International Application No :PCT/US2011/067547
Filing Date :28/12/2011
(87) International Publication No :WO 2012/099692
(61) Patent of Addition to Application Number :NA
Filing Date :NA
(62) Divisional to Application Number :NA
Filing Date :NA

(71)**Name of Applicant :**
1)QUALCOMM INCORPORATED
Address of Applicant :ATTN: International IP Administration 5775 Morehouse Drive San Diego California 92121 1714 U.S.A.
(72)**Name of Inventor :**
1)CHIEN Wei Jung
2)CHEN Peisong
3)KARCZEWICZ Marta

(57) Abstract :
A method of coding video data includes determining a candidate motion vector for each of one or more candidate portions of a video frame and determining a current motion vector for a current portion of a current frame. The current motion vector identifies a portion of a reference frame that at least partially matches the current portion of the current frame. The method also includes calculating a motion vector difference between the current motion vector and each of the candidate motion vectors selecting one of the candidate motion vectors based on the calculated motion vector differences signaling an index identifying the candidate portion having the selected one of the candidate motion vectors and signaling the corresponding motion vector difference calculated with respect to the selected one of the candidate motion vectors.

No. of Pages : 51 No. of Claims : 48

(12) PATENT APPLICATION PUBLICATION
(19) INDIA
(22) Date of filing of Application :19/07/2013
(21) Application No.5780/CHENP/2013 A
(43) Publication Date : 05/09/2014

(54) Title of the invention : A LIGHTING DEVICE

(51) International classification :H05B37/02
(31) Priority Document No :10196376.7
(32) Priority Date :22/12/2010
(33) Name of priority country :EPO
(86) International Application No :PCT/IB2011/055627
Filing Date :13/12/2011
(87) International Publication No :WO 2012/085754
(61) Patent of Addition to Application Number :NA
Filing Date :NA
(62) Divisional to Application Number :NA
Filing Date :NA

(71)**Name of Applicant :**
1)KONINKLIJKE PHILIPS ELECTRONICS N.V.
Address of Applicant :High Tech Campus 5 NL 5656 AE Eindhoven Netherlands
(72)**Name of Inventor :**
1)VAN ENDERT Tony Petrus
2)COOPMANS Markus Wilhelmus Maria

(57) Abstract :
In a lighting device (101) a primary control unit (103) is arranged to select on the basis of an obtained lighting device control command a broadcast communication mode or an addressing communication mode of a control unit interface (113) and to communicate at least one light generation control command to at least one light unit interface (117) of at least one respective light unit (107) of a group of light units (107) of the lighting device (101) via a control unit interface (113) of the primary control unit (103) using the selected communication mode.

No. of Pages : 22 No. of Claims : 15

(12) PATENT APPLICATION PUBLICATION
(19) INDIA
(22) Date of filing of Application :09/07/2013
(21) Application No.5444/CHENP/2013 A
(43) Publication Date : 05/09/2014

(54) Title of the invention : LTE/WI FI COEXISTENCE

(51) International classification :H04W4/06
(31) Priority Document No :61/430193
(32) Priority Date :06/01/2011
(33) Name of priority country :U.S.A.
(86) International Application No :PCT/IB2012/050015
Filing Date :02/01/2012
(87) International Publication No :WO 2012/093349
(61) Patent of Addition to Application Number :NA
Filing Date :NA
(62) Divisional to Application Number :NA
Filing Date :NA

(71)**Name of Applicant :**
1)ALTAIR SEMICONDUCTOR LTD.
Address of Applicant :6 Haharash Street P.O. Box 7158 45240 Hod Hasharon Israel
(72)**Name of Inventor :**
1)BITRAN Yigal
2)YAGIL Ariel

(57) Abstract :
A method for communication in a wireless device (24) includes establishing a first connection with a base station (BS 28) of a long range wireless data network and a second connection on a Wireless Local Area Network (WLAN). A time interval (96) is selected in the wireless device for communicating over the second connection. In preparation for the selected time interval the BS is caused to refrain from scheduling data transmission from the wireless device to the BS over the first connection during the time interval by reporting to the BS prior to the time interval that no data is pending for transmission from the wireless device. The wireless device communicates over the second connection on the WLAN during the time interval.

No. of Pages : 39 No. of Claims : 52

(12) PATENT APPLICATION PUBLICATION
(19) INDIA
(22) Date of filing of Application :16/07/2013
(21) Application No.5670/CHENP/2013 A
(43) Publication Date : 05/09/2014

(54) Title of the invention : ORAL HYGIENE APPLIANCE WITH BRISTLE CHARACTERISTICS FOR EFFECTIVE CLEANING

(51) International classification :A46B9/04,A61C17/22
(31) Priority Document No :61/424718
(32) Priority Date :20/12/2010
(33) Name of priority country :U.S.A.
(86) International Application No :PCT/IB2011/055801
Filing Date :20/12/2011
(87) International Publication No :WO 2012/085832
(61) Patent of Addition to Application Number :NA
Filing Date :NA
(62) Divisional to Application Number :NA
Filing Date :NA

(71)**Name of Applicant :**
1)KONINKLIJKE PHILIPS ELECTRONICS N.V.
Address of Applicant :High Tech Campus 5 NL 5656 AE Eindhoven Netherlands
(72)**Name of Inventor :**
1)MILLER Kevin A

(57) Abstract :
An oral cleaning appliance such as a toothbrush (10) or a mouthpiece (20) includes a bristle arrangement which comprises a base member and a field of bristles for contacting and cleaning teeth wherein the bristle field (17 26) has bristles with a density of between 2 7% and wherein the individual bristle filaments have a stiffness characterized by a deflection of no greater than 50% of their length for a bristle tip pressure of 6 Newtons/cm and a deflection reaching 50% for a bristle tip pressure of 85 Newtons/cm.

No. of Pages : 15 No. of Claims : 13

(12) PATENT APPLICATION PUBLICATION
(19) INDIA
(22) Date of filing of Application :19/07/2013
(21) Application No.5782/CHENP/2013 A
(43) Publication Date : 05/09/2014

(54) Title of the invention : SYSTEM AND METHOD FOR PROVIDING INTELLIGENT PARAMETER SUBSTITUTIONS FOR CLINICAL APPLICATIONS

(51) International classification :G06F19/00
(31) Priority Document No :61/425985
(32) Priority Date :22/12/2010
(33) Name of priority country :U.S.A.
(86) International Application No :PCT/IB2011/055658
Filing Date :14/12/2011
(87) International Publication No :WO 2012/085762
(61) Patent of Addition to Application Number :NA
Filing Date :NA
(62) Divisional to Application Number :NA
Filing Date :NA

(71)**Name of Applicant :**
1)KONINKLIJKE PHILIPS ELECTRONICS N.V.
Address of Applicant :High Tech Campus 5 NL 5656 AE Eindhoven Netherlands
(72)**Name of Inventor :**
1)GROSS Brian David
2)JOHNSON Soren Steiny
3)ZENGO Elizabeth J.
4)KIM David Youngjin
5)SHVARTSMAN Dmitri
6)RABER Gregory

(57) Abstract :
A patient monitoring station (44) includes a display (12) that displays a plurality of sectors (60) each sector including one or more tiles (64). A controller (46) displays patient data received from a patient information server (10) in a corresponding sector of the display. The controller is programmed to populate the tiles of the sectors with patient data according to a selected clinical theme.

No. of Pages : 29 No. of Claims : 20

(12) PATENT APPLICATION PUBLICATION
(19) INDIA
(22) Date of filing of Application :19/07/2013
(21) Application No.5785/CHENP/2013 A
(43) Publication Date : 05/09/2014

(54) Title of the invention : METHOD AND APPARATUS WITH LIGHTING SYSTEM FOR BREWING INGREDIENTS IN A SOLVENT

(51) International classification :A47J27/18,A47J27/20,A47J27/212
(31) Priority Document No :PCT/CN2010/080096
(32) Priority Date :22/12/2010
(33) Name of priority country :China
(86) International Application No :PCT/IB2011/055644
Filing Date :13/12/2011
(87) International Publication No :WO 2012/085757
(61) Patent of Addition to Application Number :NA
Filing Date :NA
(62) Divisional to Application Number :NA
Filing Date :NA

(71)**Name of Applicant :**
1)KONINKLIJKE PHILIPS ELECTRONICS N.V.
Address of Applicant :High Tech Campus 5 NL 5656 AE Eindhoven Netherlands
(72)**Name of Inventor :**
1)KELLY Declan Patrick
2)WANG Guangwei

(57) Abstract :
The invention relates to a method and an apparatus for brewing ingredients in a solvent said apparatus comprising: a container for containing said ingredients; a sensor for measuring a characteristic of said solvent; a lighting system (6) for generating a light beam (LB) that travels towards said container said lighting system comprising a circuit for changing based on the measured characteristic a lighting property of said light beam. With such an invention the visual indication is directly based on characteristics of the beverage being prepared thereby providing the user with more accurate visual information on the state of preparation and also greatly improving user experience of a person using the apparatus.

No. of Pages : 17 No. of Claims : 11

(12) PATENT APPLICATION PUBLICATION
(19) INDIA
(22) Date of filing of Application :19/07/2013
(21) Application No.5786/CHENP/2013 A
(43) Publication Date : 05/09/2014

(54) Title of the invention : RINSING GLASS AND CHARGER COMBINATION FOR A POWER TOOTHBRUSH

(51) International classification :A61C17/22
(31) Priority Document No :61/426071
(32) Priority Date :22/12/2010
(33) Name of priority country :U.S.A.
(86) International Application No :PCT/IB2011/055780
Filing Date :19/12/2011
(87) International Publication No :WO 2012/085819
(61) Patent of Addition to Application Number :NA
Filing Date :NA
(62) Divisional to Application Number :NA
Filing Date :NA

(71)**Name of Applicant :**
1)KONINKLIJKE PHILIPS ELECTRONICS N.V.
Address of Applicant :High Tech Campus 5 NL 5656 AE Eindhoven Netherlands
(72)**Name of Inventor :**
1)NAZAROFF Peter George
2)SHREVE Peter Lewis
3)JOHNSON Ahren Karl
4)LI Chi Hung
5)LO Wai Hang Raymond

(57) Abstract :
The combination of a power toothbrush and a charging system includes a charging base unit(12) having a charging coil (22) wound around the interior surface (20) of a portion of the charging base unit and connectable to a source of electric power and a rinsing vessel(26) adapted to hold a toothbrush the rinsing glass having a lower surface (27) configured to fit onto the upper surface (14) of the charging unit. The vessel is configured to hold a toothbrush in such a manner to prevent the toothbrush from tipping over when placed in the vessel and further configured relative to the base unit that charging of the power toothbrush can occur between a pickup coil (46) in the handle of the toothbrush and the charging coil in the base charging unit.

No. of Pages : 10 No. of Claims : 11

(12) PATENT APPLICATION PUBLICATION
(19) INDIA
(22) Date of filing of Application :20/06/2013
(21) Application No.4784/CHENP/2013 A
(43) Publication Date : 05/09/2014

(54) Title of the invention : METHOD AND APPARATUS FOR CONTROLLING DEVICE

(51) International classification :H04N5/225
(31) Priority Document No :1020110005987
(32) Priority Date :20/01/2011
(33) Name of priority country :Republic of Korea
(86) International Application No :PCT/KR2011/007646
Filing Date :14/10/2011
(87) International Publication No :WO 2012/099315
(61) Patent of Addition to Application Number :NA
Filing Date :NA
(62) Divisional to Application Number :NA
Filing Date :NA

(71)**Name of Applicant :**
1)SAMSUNG ELECTRONICS CO. LTD.
Address of Applicant :129 Samsung ro Yeongtong gu Suwon si Gyeonggi do 443 742 Republic of Korea
(72)**Name of Inventor :**
1)EUN Dong Jin
2)KIM Hark Joon
3)KANG Seong Hoon

(57) Abstract :
A method of controlling a device is provided including identifying a registered device from a screen input by a camera receiving a user input for the identified device and transmitting a control command corresponding to the input to the identified device.

No. of Pages : 26 No. of Claims : 22

(12) PATENT APPLICATION PUBLICATION
(19) INDIA
(22) Date of filing of Application :03/07/2013
(21) Application No.5227/CHENP/2013 A
(43) Publication Date : 05/09/2014

(54) Title of the invention : METHODS AND APPARATUSES FOR LOW RATE TELEVISION WHITE SPACE (TVWS) ENABLEMENT

(51) International classification :H04W16/14,H04W84/12
(31) Priority Document No :61/433046
(32) Priority Date :14/01/2011
(33) Name of priority country :U.S.A.
(86) International Application No :PCT/US2012/021379
Filing Date :13/01/2012
(87) International Publication No :WO 2012/097341
(61) Patent of Addition to Application Number :NA
Filing Date :NA
(62) Divisional to Application Number :NA
Filing Date :NA

(71)**Name of Applicant :**
1)QUALCOMM INCORPORATED
Address of Applicant :Attn: International IP Administration 5775 Morehouse Drive San Diego California 92121 U.S.A.
(72)**Name of Inventor :**
1)SHELLHAMMER Stephen J.
2)SHEN Cong
3)TANDRA Rahul
4)ABRAHAM Santosh Paul
5)VERMANI Sameer
6)SAMPATH Hemanth

(57) Abstract :
Certain aspects of the present disclosure relate to techniques for supporting television white space (TVWS) communication. In an aspect of the present disclosure a low rate TVWS enabler (Mode II wireless communication device) may provide initial enablement for all Mode I devices (e.g. access points and user terminals) as well as it may transmit a contact verification signal (CVS) on a regular basis to keep the Mode I devices enabled for the TVWS communication.

No. of Pages : 60 No. of Claims : 59

(12) PATENT APPLICATION PUBLICATION
(19) INDIA
(22) Date of filing of Application :05/07/2013
(21) Application No.5346/CHENP/2013 A
(43) Publication Date : 05/09/2014

(54) Title of the invention : TEMPERATURE COMPENSATED BUSHING DESIGN

(51) International classification :H01B17/28
(31) Priority Document No :11152449.2
(32) Priority Date :28/01/2011
(33) Name of priority country :EPO
(86) International Application No :PCT/EP2011/073445
Filing Date :20/12/2011
(87) International Publication No :WO 2012/100883
(61) Patent of Addition to Application Number :NA
Filing Date :NA
(62) Divisional to Application Number :NA
Filing Date :NA

(71)**Name of Applicant :**
1)ABB TECHNOLOGY LTD
Address of Applicant :Affolternstrasse 44 CH 8050 Z¼rich Switzerland
(72)**Name of Inventor :**
1)ERIKSSON Thomas
2)SJ–BERG Peter

(57) Abstract :
A bushing (11) comprising a bottom contact (3) and a tubular conductor (2) having a lower part having an end in electrical and mechanical contact with the bottom contact and a draw rod arrangement inside the conductor arranged to exert sufficient contact pressure between the bottom contact and the conductor and the draw rod arrangement comprises a member (10) in mechanical contact with the conductor and draw rod (1) having a second end fixedly connected to the bottom contact and a first end in connection to the member and clamping means (5) the clamping means is adapted to apply a force urging the member in the direction of the bottom contact to generate sufficient contact pressure between the bottom contact and the conductor. The member (10) of the draw rod arrangement is arranged to apply said force to the lower part of the conductor.

No. of Pages : 19 No. of Claims : 12

(12) PATENT APPLICATION PUBLICATION
(21) Application No.5347/CHENP/2013 A
(19) INDIA
(22) Date of filing of Application :05/07/2013
(43) Publication Date : 05/09/2014

(54) Title of the invention : HANDHELD EMG STIMULATOR DEVICE WITH ADJUSTABLE SHAFT LENGTH

(51) International classification :A61N1/34
(31) Priority Document No :61/422614
(32) Priority Date :13/12/2010
(33) Name of priority country :U.S.A.
(86) International Application No :PCT/US2011/047011
Filing Date :09/08/2011
(87) International Publication No :WO 2012/082187
(61) Patent of Addition to Application Number :NA
Filing Date :NA
(62) Divisional to Application Number :NA
Filing Date :NA

(71)**Name of Applicant :**
1)NEURAL PATHWAYS LLC
Address of Applicant :2225 Sperry Ave. Suite # 1000 Ventura CA 93003 U.S.A.
(72)**Name of Inventor :**
1)REA Ryan M.

(57) Abstract :
A nerve stimulating device with an adjustable length is shown and described. The device includes a handle and an elongated shaft with a stimulating electrode. The stimulating electrode can be selectively positioned to a plurality of distances relative to the handle. The device allows nerves in nerve regions at multiple positions relative to the surface of the patient s body to be stimulated with a single device.

No. of Pages : 35 No. of Claims : 30

(12) PATENT APPLICATION PUBLICATION
(19) INDIA
(22) Date of filing of Application :12/07/2013
(21) Application No.5576/CHENP/2013 A
(43) Publication Date : 05/09/2014

(54) Title of the invention : SYSTEMS AND METHODS FOR ACTIVATION AND DEACTIVATION OF APPLIANCES

(51) International classification :G05D3/12
(31) Priority Document No :13/042611
(32) Priority Date :08/03/2011
(33) Name of priority country :U.S.A.
(86) International Application No :PCT/US2012/028125
Filing Date :07/03/2012
(87) International Publication No :WO 2012/122304
(61) Patent of Addition to Application Number :NA
Filing Date :NA
(62) Divisional to Application Number :NA
Filing Date :NA

(71)**Name of Applicant :**
1)D. LIGHT DESIGN INC.
Address of Applicant :Clifton House 75 Fort Street P.O. Box 1350 Grand Cayman KY1 1108 Cayman Island
(72)**Name of Inventor :**
1)RICKET Douglas J.

(57) Abstract :
Systems and methods are provided for an appliance system. The system includes an appliance and a processor connected to the appliance such that the processor places the appliance in one of an enabled state and a disabled state. The processor is configured to track usage of the appliance and to place the appliance in a disabled state when the usage of the appliance exceeds a threshold amount. The system also includes a data receiving device configured to receive a code wherein upon receipt of a valid code the processor is configured to adjust the threshold amount to allow additional usage of the appliance.

No. of Pages : 29 No. of Claims : 18

(12) PATENT APPLICATION PUBLICATION
(19) INDIA
(22) Date of filing of Application :19/07/2013
(21) Application No.5794/CHENP/2013 A
(43) Publication Date : 05/09/2014

(54) Title of the invention : FUSED HETEROCYCLIC COMPOUND AND USE FOR PEST CONTROL THEREOF

(51) International classification :C07D235/18,C07D277/68,C07D471/04
(31) Priority Document No :2010287412
(32) Priority Date :24/12/2010
(33) Name of priority country :Japan
(86) International Application No :PCT/JP2011/080557
Filing Date :22/12/2011
(87) International Publication No :WO 2012/086848
(61) Patent of Addition to Application Number :NA
Filing Date :NA
(62) Divisional to Application Number :NA
Filing Date :NA

(71)**Name of Applicant :**
1)SUMITOMO CHEMICAL COMPANY LIMITED
Address of Applicant :27 1 Shinkawa 2 chome Chuo ku Tokyo 1048260 Japan
(72)**Name of Inventor :**
1)TAKYO Hayato
2)TAKAHASHI Masaki
3)TANABE Takamasa
4)NOKURA Yoshihiko
5)ITO Mai
6)IWATA Atsushi

(57) Abstract :
A fused heterocyclic compound the formula (1) : wherein A represents NR and the like; A represents a nitrogen atom and the like; Arepresents a nitrogen atom and the like; R represents a C1 C6 chain hydrocarbon group optionally having one or more atoms or groups selected from Group X and the like; R R R and R are same or different and represent independently a C1 C6 chain hydrocarbon group optionally having one or more halogen atoms and the like; R and R are same or different and represent independently a C1 C6 chain hydrocarbon group optionally having one or more atoms or groups selected from Group X and the like; R represents a C1 C6 chain hydrocarbon group optionally having one or more atoms or groups selected from Group W and the like; n represents 0 1 or 2. The compound has an excellent activity of controlling pests.

No. of Pages : 693 No. of Claims : 15

(12) PATENT APPLICATION PUBLICATION
(19) INDIA
(22) Date of filing of Application :12/06/2013
(21) Application No.4484/CHENP/2013 A
(43) Publication Date : 05/09/2014

(54) Title of the invention : HERBICIDAL COMPOSITIONS

(51) International classification	:A01N43/84,C07D413/04,A01N25/32
(31) Priority Document No	:10195216.6
(32) Priority Date	:15/12/2010
(33) Name of priority country	:EPO
(86) International Application No	:PCT/EP2011/072596
Filing Date	:13/12/2011
(87) International Publication No	:WO 2012/080239
(61) Patent of Addition to Application Number	:NA
Filing Date	:NA
(62) Divisional to Application Number	:NA
Filing Date	:NA

(71)**Name of Applicant :**
1)BASF SE
Address of Applicant :67056 Ludwigshafen Germany
(72)**Name of Inventor :**
1)SEITZ Thomas
2)NEWTON Trevor William
3)SIMON Anja
4)EVANS Richard Roger
5)LANDES Andreas

(57) Abstract :
The present invention relates to a herbicidal composition comprising: A) at least one benzoxazinone compound of the Formula (I) wherein the variables are as defined as given in the specification; and a safener of formula II as defined in the specification.

No. of Pages : 79 No. of Claims : 13

(12) PATENT APPLICATION PUBLICATION
(19) INDIA
(22) Date of filing of Application :18/06/2013
(21) Application No.4686/CHENP/2013 A
(43) Publication Date : 05/09/2014

(54) Title of the invention : MORPHOLOGICAL ANTI ALIASING (MLAA) OF A RE PROJECTION OF A TWO DIMENSIONAL IMAGE

(51) International classification :G06K9/60
(31) Priority Document No :12/986854
(32) Priority Date :07/01/2011
(33) Name of priority country :U.S.A.
(86) International Application No :PCT/US2011/063003
Filing Date :02/12/2011
(87) International Publication No :WO 2012/094076
(61) Patent of Addition to Application Number :NA
Filing Date :NA
(62) Divisional to Application Number :NA
Filing Date :NA

(71)**Name of Applicant :**
1)Sony Computer Entertainment America LLC
Address of Applicant :Sony Computer Entertainment America Llc 919 East Hillsdale Boulevard Foster City California 94404 U.S.A.
(72)**Name of Inventor :**
1)GENOVA Barry M.
2)BERGHOFF Tobias

(57) Abstract :
Morphological anti aliasing (MLAA) of a re projection of a two dimensional image can be implemented in a way that produces a better result while using fewer processor resources. One or more discontinuities between each neighboring pixel of the two dimensional image are determined. One or more pre defined patterns formed by the one or more discontinuities are identified. A blend amount is calculated for each pixel neighboring the identified pre defined patterns. A re projection is applied to the two dimensional image and to the blend amount for each pixel thereby generating re projected blend amounts. The neighboring pixels of the re projection are then blended according to the re projected blend amounts.

No. of Pages : 26 No. of Claims : 24

(12) PATENT APPLICATION PUBLICATION
(19) INDIA
(22) Date of filing of Application :21/06/2013
(21) Application No.4906/CHENP/2013 A
(43) Publication Date : 05/09/2014

(54) Title of the invention : COMMUNICATION NETWORK SYSTEM

(51) International classification :G06F13/00,G05B19/05,H04L12/56
(31) Priority Document No :NA
(32) Priority Date :NA
(33) Name of priority country :NA
(86) International Application No :PCT/JP2010/073757
Filing Date :28/12/2010
(87) International Publication No :WO 2012/090313
(61) Patent of Addition to Application Number :NA
Filing Date :NA
(62) Divisional to Application Number :NA
Filing Date :NA

(71)**Name of Applicant :**
1)Mitsubishi Electric Corporation
Address of Applicant :7 3 Marunouchi 2 chome Chiyoda ku Tokyo 1008310 Japan
(72)**Name of Inventor :**
1)FUJITA Tomoyuki

(57) Abstract :
A communication network system (100) in which a plurality of communication stations (10 20 30) are connected to each other so as to send or receive messages. The communication network system is characterized in that each of the communication stations is provided with at least one processing unit and in the case in which a request message containing a command to measure a transient transmission process time has been received the processing unit stores in storing means provided to the processing unit a first time required by the processing unit to process the request message and sends out the request message; and in the case in which a response message which is a response to the request message containing the command to measure the transient transmission process time has been received the processing unit stores in the storing means a second time required until the response message is received after the request message is sent and also stores a third time required by the processing unit to process the response message and sends out the response message.

No. of Pages : 29 No. of Claims : 4

(12) PATENT APPLICATION PUBLICATION
(19) INDIA
(22) Date of filing of Application :08/07/2013
(21) Application No.5351/CHENP/2013 A
(43) Publication Date : 05/09/2014

(54) Title of the invention : HUMAN MONOCLONAL ANTIBODY WITH SPECIFICITY FOR DENGUE VIRUS SEROTYPE 1 E PROTEIN AND USES THEREOF

(51) International classification :C07K16/10,A61P31/14,C12N15/13
(31) Priority Document No :61/423085
(32) Priority Date :14/12/2010
(33) Name of priority country :U.S.A.
(86) International Application No :PCT/SG2011/000436
Filing Date :14/12/2011
(87) International Publication No :WO 2012/082073
(61) Patent of Addition to Application Number :NA
Filing Date :NA
(62) Divisional to Application Number :NA
Filing Date :NA

(71)**Name of Applicant :**
1)NATIONAL UNIVERSITY OF SINGAPORE
Address of Applicant :21 Lower Kent Ridge Road Singapore 119077 Singapore
2)DSO NATIONAL LABORATORIES
(72)**Name of Inventor :**
1)MACARY Paul Anthony
2)TEOH Ee Ping Evelyn
3)HANSON Brendon John
4)TEO En Wei
5)LIM Angeline Pei Chiew
6)NG Mah Lee Mary
7)LOK Shee Mei
8)KUKKARO Petra Eveliina

(57) Abstract :
Compositions and methods for the treatment or prevention of Dengue virus infection in a vertebrate subject are provided. In particular human neutralizing monoclonal antibodies to Dengue virus isolated from EBV immortalized B cells derived from patients who have recovered from Dengue infection are disclosed. Methods are provided for administering such antibodies to a vertebrate subject in an amount effective to reduce eliminate or prevent relapse from infection.

No. of Pages : 72 No. of Claims : 37

(12) PATENT APPLICATION PUBLICATION
(19) INDIA
(22) Date of filing of Application :19/07/2013
(21) Application No.5807/CHENP/2013 A
(43) Publication Date : 05/09/2014

(54) Title of the invention : CONTENT BASED FILE CHUNKING

(51) International classification :G06F17/30,G06F12/00
(31) Priority Document No :61/433152
(32) Priority Date :14/01/2011
(33) Name of priority country :U.S.A.
(86) International Application No :PCT/US2012/021191
Filing Date :13/01/2012
(87) International Publication No :WO 2012/097217
(61) Patent of Addition to Application Number :NA
Filing Date :NA
(62) Divisional to Application Number :NA
Filing Date :NA

(71)**Name of Applicant :**
1)APPLE INC.
Address of Applicant :1 Infinite Loop Cupertino CA 95014 2084 U.S.A.
(72)**Name of Inventor :**
1)GIAMPAOLO Dominic B.
2)MENSCH James L.
3)BIRSE Cameron Stuart
4)MISRA Ronnie G.
5)CARLSON Eric Olaf

(57) Abstract :
Methods systems and apparatus including computer programs encoded on a computer storage medium for transferring electronic data. In general one aspect of the subject matter described in this specification can be embodied in methods (300 400 700) that include the actions of identifying a data item to be chunked; determining the type of the data item; determining whether the type of the data item is one of a specified one or more types; if it is determined that the type of the data item is not one of the specified one or more types performing a first chunking of the data item; and if it is determined that the type of the data item is one of the specified one or more types performing a second chunking of the data item that is based on the particular content portions of the data item.

No. of Pages : 30 No. of Claims : 26

(12) PATENT APPLICATION PUBLICATION
(21) Application No.4694/CHENP/2013 A
(19) INDIA
(22) Date of filing of Application :18/06/2013
(43) Publication Date : 05/09/2014

(54) Title of the invention : FACILITATING USER SUPPORT OF ELECTRONIC DEVICES USING DYNAMIC MATRIX CODE GENERATION

(51) International classification :G06K9/00
(31) Priority Document No :12/953227
(32) Priority Date :23/11/2010
(33) Name of priority country :U.S.A.
(86) International Application No :PCT/US2011/059977
Filing Date :09/11/2011
(87) International Publication No :WO 2012/071174
(61) Patent of Addition to Application Number :NA
Filing Date :NA
(62) Divisional to Application Number :NA
Filing Date :NA

(71)**Name of Applicant :**
1)ECHOSTAR TECHNOLOGIES L.L.C.
Address of Applicant :100 Inverness Circle East Englewood Colorado 80112 U.S.A.
(72)**Name of Inventor :**
1)DUGAN Michael T.
2)MINNICK Dan J.
3)GOMEZ Mark

(57) Abstract :
An electronic device may derive information specific to the device dynamically generate a matrix code that includes the information as well as user support information and transmit the dynamically generated code to a display. When a user captures the matrix code with a reader device the reader device may decode (or use a back end server to decode) the specific information specific and the user support information and initiate a user support request. Thus user support for electronic devices may be facilitated utilizing dynamically generated matrix codes such as (but not limited to) QR codes. In response to the initiated user support request user support may then be provided for the user. Problems may be automatically taken care of for the user tutorials may be provided for the user one or more notifications may be provided to the user service calls may be scheduled for the user and so on.

No. of Pages : 27 No. of Claims : 20

(12) PATENT APPLICATION PUBLICATION
(19) INDIA
(22) Date of filing of Application :26/06/2013
(21) Application No.5009/CHENP/2013 A
(43) Publication Date : 05/09/2014

(54) Title of the invention : VIRUS LIKE PARTICLE PRODUCTION IN PLANTS

(51) International classification :C12N15/00,A61K39/295,A61P31/16
(31) Priority Document No :61/426401
(32) Priority Date :22/12/2010
(33) Name of priority country :U.S.A.
(86) International Application No :PCT/CA2011/001427
Filing Date :22/12/2011
(87) International Publication No :WO 2012/083445
(61) Patent of Addition to Application Number :NA
Filing Date :NA
(62) Divisional to Application Number :NA
Filing Date :NA

(71)**Name of Applicant :**
1)MEDICAGO INC.
Address of Applicant :1020 Route de IEglise Suite 600 Qubec Qubec G1V 3V9 Canada
(72)**Name of Inventor :**
1)DAOUST Marc Andre
2)COUTURE Manon
3)LAVOIE Pierre Olivier
4)VEZINA Louis Philippe

(57) Abstract :
A method of producing a virus like particle (VLP) in a plant and compositions comprising VLPs are provided. The method involves introducing a nucleic acid comprising a regulatory region active in the plant and operatively linked to a chimeric nucleotide sequence encoding in series an ectodomain from a virus trimeric surface protein or fragment thereof fused to an influenza transmembrane domain and cytoplasmic tail into the plant or portion of the plant the ectodomain is from a non influenza virus trimeric surface protein and heterologous with respect to the influenza transmembrane domain and the cytoplasmic tail. The plant or portion of the plant are incubated under conditions that permit the expression of the nucleic acid thereby producing the VLP. A VLP produced by this method are also provided.

No. of Pages : 113 No. of Claims : 16

(12) PATENT APPLICATION PUBLICATION
(19) INDIA
(22) Date of filing of Application :04/07/2013
(21) Application No.5267/CHENP/2013 A
(43) Publication Date : 05/09/2014

(54) Title of the invention : PLANTS HAVING INCREASED TOLERANCE TO HERBICIDES

(51) International classification :C12N15/82,A01H5/00,A01N63/00
(31) Priority Document No :61/423604
(32) Priority Date :16/12/2010
(33) Name of priority country :U.S.A.
(86) International Application No :PCT/IB2011/055701
Filing Date :15/12/2011
(87) International Publication No :WO 2012/080975
(61) Patent of Addition to Application Number :NA
Filing Date :NA
(62) Divisional to Application Number :NA
Filing Date :NA

(71)**Name of Applicant :**
1)BASF SE
Address of Applicant :67056 Ludwigshafen Germany
2)BASF (CHINA) COMPANY LIMITED
(72)**Name of Inventor :**
1)HUTZLER Johannes
2)APONTE Raphael
3)MIETZNER Thomas
4)WITSCHEL Matthias
5)SIMON Anja
6)LERCHL Jens
7)TRESCH Stefan
8)MANKIN S. Luke

(57) Abstract :
The present invention discloses a method for controlling undesired vegetation at a plant cultivation site. The method comprises the steps of providing at said site a plant that comprises at least one nucleic acid comprising a nucleotide sequence encoding a wild type or a mutated protoporphyrinogen oxidase (PPO) which is resistant or tolerant to a benzoxazinone derivative herbicide by applying to said site an effective amount of said herbicide. The invention further discloses plants comprising wild type or mutated PPO enzymes and methods of obtaining such plants.

No. of Pages : 82 No. of Claims : 22

(12) PATENT APPLICATION PUBLICATION
(19) INDIA
(22) Date of filing of Application :19/07/2013
(21) Application No.5827/CHENP/2013 A
(43) Publication Date : 05/09/2014

(54) Title of the invention : APPARATUS SYSTEM AND METHOD FOR VAPORIZING A FUEL MIXTURE

(51) International classification :F02M17/00,F02M27/04,F02M25/025
(31) Priority Document No :61/435613
(32) Priority Date :24/01/2011
(33) Name of priority country :U.S.A.
(86) International Application No :PCT/US2012/022453
Filing Date :24/01/2012
(87) International Publication No :WO 2012/103158
(61) Patent of Addition to Application Number :NA
Filing Date :NA
(62) Divisional to Application Number :NA
Filing Date :NA

(71)**Name of Applicant :**
1)JENKINS Walter P.
Address of Applicant :P.O. Box 1673 Anna Maria Florida 34216 U.S.A.
(72)**Name of Inventor :**
1)JENKINS Walter P.

(57) Abstract :
An apparatus system and method are disclosed for vaporizing fuel. A method for vaporizing fuel includes providing a fuel vaporizer 300. The fuel vaporizer 300 includes a chamber 306 for receiving a liquid the chamber comprising at least one inlet 310 and at least one outlet 316. The fuel vaporizer also includes a driver module 302 coupled with the chamber 306 and an oscillator 304 disposed within the chamber 306 and configured to be driven by the driver module 302. The method includes feeding water through an inlet 310 of the at least one inlet into the chamber 306. The method includes driving the oscillator 304 using the driver module 302 at a predetermined frequency wherein a mist is created from the liquid. The method also includes introducing the mist from the chamber 306 via an outlet 306 of the at least one outlet into an intake of an internal combustion engine.

No. of Pages : 29 No. of Claims : 1

(12) PATENT APPLICATION PUBLICATION
(19) INDIA
(22) Date of filing of Application :01/07/2013
(21) Application No.5149/CHENP/2013 A
(43) Publication Date : 05/09/2014

(54) Title of the invention : IMPROVEMENTS IN OR RELATING TO TRACTOR/TRAILER COMBINATIONS

(51) International classification :B60K1/00,B60W20/00
(31) Priority Document No :1021362.7
(32) Priority Date :16/12/2010
(33) Name of priority country :U.K.
(86) International Application No :PCT/GB2011/052488
Filing Date :15/12/2011
(87) International Publication No :WO 2012/080738
(61) Patent of Addition to Application Number :NA
Filing Date :NA
(62) Divisional to Application Number :NA
Filing Date :NA

(71)**Name of Applicant :**
1)GKN AUTOSTRUCTURES LIMITED
Address of Applicant :P.O. Box 83 Hadley Castle Works Telford Shropshire TF1 6TE U.K.
(72)**Name of Inventor :**
1)FANOURAKIS Angelo
2)MASON Bachrun
3)HILL Matthew

(57) Abstract :
A tractor unit (10) and a trailer unit (14) are connected by a connecting pin (33) on one unit (12 14) which is in use received in an opening (21) in a connecting surface of the other unit the connecting pin (33) including a sensor device (70) to sense loads imposed on the connecting pin (33) as the trailer unit (14) tends to decelerate or accelerate relative to the tractor unit (12) there being a control system including a controller (65) which receives signals from the sensor device (70) representative of loads imposed on the connecting pin (33) and at least one electrical motive machine (50) is controlled the machine (50) being capable of being electrically driven by power from an electrical storage device to provide drive to drive at least one ground engaging wheel (45a 45b) and of generating electrical power for storage by an electrical storage device (58) such as to minimise the loads imposed on the connecting pin (33).

No. of Pages : 34 No. of Claims : 36

(12) PATENT APPLICATION PUBLICATION
(19) INDIA
(22) Date of filing of Application :02/07/2013
(21) Application No.5151/CHENP/2013 A
(43) Publication Date : 05/09/2014

(54) Title of the invention : VARIABLE BEAMFORMING WITH A MOBILE PLATFORM

(51) International classification :H04R3/00
(31) Priority Document No :13/006303
(32) Priority Date :13/01/2011
(33) Name of priority country :U.S.A.
(86) International Application No :PCT/US2012/021340
Filing Date :13/01/2012
(87) International Publication No :WO 2012/097314
(61) Patent of Addition to Application Number :NA
Filing Date :NA
(62) Divisional to Application Number :NA
Filing Date :NA

(71)**Name of Applicant :**
1)QUALCOMM INCORPORATED
Address of Applicant :Attn: International Ip Administration 5775 Morehouse Drive San Diego California 92121 U.S.A.
(72)**Name of Inventor :**
1)FORUTANPOUR Babak
2)SCHEVCIW Andre Gustavo P.
3)VISSER Erik
4)MOMEYER Brian

(57) Abstract :
A mobile platform includes a microphone array and is capable of implementing beamforming to amplify or suppress audio information from a sound source. The sound source is indicated through a user input such as pointing the mobile platform in the direction of the sound source or through a touch screen display interface. The mobile platform further includes orientation sensors capable of detecting movement of the mobile platform. When the mobile platform moves with respect to the sound source the beamforming is adjusted based on the data from the orientation sensors so that beamforming is continuously implemented in the direction of the sound source. The audio information from the sound source may be included or suppressed from a telephone or video telephony conversation. Images or video from a camera may be likewise controlled based on the data from the orientation sensors.

No. of Pages : 25 No. of Claims : 20

(12) PATENT APPLICATION PUBLICATION
(21) Application No.5370/CHENP/2013 A
(19) INDIA
(22) Date of filing of Application :08/07/2013
(43) Publication Date : 05/09/2014

(54) Title of the invention : COMMUNICATION SYSTEM METHOD OF SWITCHING COMMUNICATION LINK AND MASTER STATION DEVICE

(51) International classification :H04L12/44
(31) Priority Document No :2011024885
(32) Priority Date :08/02/2011
(33) Name of priority country :Japan
(86) International Application No :PCT/JP2012/051710
Filing Date :26/01/2012
(87) International Publication No :WO 2012/108274
(61) Patent of Addition to Application Number :NA
Filing Date :NA
(62) Divisional to Application Number :NA
Filing Date :NA

(71)**Name of Applicant :**
1)Mitsubishi Electric Corporation
Address of Applicant :7 3 Marunouchi 2 chome Chiyoda ku Tokyo 1008310 Japan
(72)**Name of Inventor :**
1)MUKAI Hiroaki
2)NAKURA Kenichi

(57) Abstract :
The purpose of the present invention is to perform more suitable link operation by minimizing the possibility of erroneous switching to a reserved main communication link on the basis of the determination that a failure has occurred even when no failure exists in an in use main communication link. The communication system according to the present invention is a communication system having both the redundant configuration and the power saved mode operation function of a communication link which is provided with a power saved device identifying means for identifying a slave station device in a power saved mode and a link switching means for switching a communication link constituting a communication path from an in use communication link to a reserved communication link when a state of receiving no signal from any slave station device among a plurality of the slave station devices except for the slave station devices identified by the power saved device identifying means as being in the power saved mode has continued for a predetermined period of time.

No. of Pages : 46 No. of Claims : 8

(12) PATENT APPLICATION PUBLICATION
(21) Application No.5842/CHENP/2013 A
(19) INDIA
(22) Date of filing of Application :19/07/2013
(43) Publication Date : 05/09/2014

(54) Title of the invention : URINE TEST SHEET

(51) International classification :G01N33/52
(31) Priority Document No :2011029375
(32) Priority Date :15/02/2011
(33) Name of priority country :Japan
(86) International Application No :PCT/JP2012/000996
Filing Date :15/02/2012
(87) International Publication No :WO 2012/111328
(61) Patent of Addition to Application Number :NA
Filing Date :NA
(62) Divisional to Application Number :NA
Filing Date :NA

(71)**Name of Applicant :**
1)MATUMURA Takahito
Address of Applicant :15 18 Ichigayahachimancho Shinjuku ku Tokyo 1620844 Japan
(72)**Name of Inventor :**
1)MATUMURA Takahito

(57) Abstract :
The purpose of the present invention is to provide a urine test sheet whereby a time sensitive workload on a laboratory staff performing a test using a urine test sheet can be reduced and highly reliable test results can be obtained. A urine test sheet comprising a support and a reaction reagent formed on said support when the urine test sheet is immersed in a urine specimen and then taken out said reaction reagent reacting after a prescribed period of time with a prescribed subject to be tested wherein on the support a pad shaped detection member comprising the reaction reagent and a reaction terminating agent capable of terminating the aforesaid reaction is formed said reaction terminating agent being coated with a water soluble material which dissolves in moisture in the urine and thus allows the reaction terminating agent to act.

No. of Pages : 42 No. of Claims : 12

(12) PATENT APPLICATION PUBLICATION
(19) INDIA
(22) Date of filing of Application :28/06/2013
(21) Application No.5095/CHENP/2013 A
(43) Publication Date : 05/09/2014

(54) Title of the invention : IGNITION SWITCH FOR VEHICLE

(51) International classification :H01H27/06
(31) Priority Document No :2011003914
(32) Priority Date :12/01/2011
(33) Name of priority country :Japan
(86) International Application No :PCT/JP2011/069725
Filing Date :31/08/2011
(87) International Publication No :WO 2012/096026
(61) Patent of Addition to Application Number :NA
Filing Date :NA
(62) Divisional to Application Number :NA
Filing Date :NA

(71)**Name of Applicant :**
1)KABUSHIKI KAISHA HONDA LOCK
Address of Applicant :3700 Aza Wadayama Shimonaka Sadowara cho Miyazaki shi Miyazaki 8800293 Japan
(72)**Name of Inventor :**
1)HIDAKA Masatake

(57) Abstract :
An ignition switch for a vehicle wherein a switch case that has fixed contacts is attached to a body having a cylinder hole which mates with a rotor such that rotation of the rotor according to a key operation is possible a contact holder which holds movable contacts that can make contact with the fixed contacts is associated with the movement of the rotor linked thereto and accommodated in the switch case and at least part of a coupler which covers terminals connected to the fixed contact points and protruding from the switch case is formed integrally on a cover member which covers a part of the switch case said ignition switch being characterized in that a switch assembly unit (75) configured from the switch case (33) which incorporates the contact holder and the cover member (35) on which the entire coupler (35c) is integrally formed and which is mated to the switch case (33) is attached to the body. Thus assemblability of the switch case and cover to the body can be increased.

No. of Pages : 27 No. of Claims : 6

(12) PATENT APPLICATION PUBLICATION
(21) Application No.5844/CHENP/2013 A
(19) INDIA
(22) Date of filing of Application :19/07/2013
(43) Publication Date : 05/09/2014

(54) Title of the invention : SYSTEM AND METHOD FOR SEQUENTIAL PLACEMENT OF COOLING RESOURCES WITHIN DATA CENTER LAYOUTS

(51) International classification :G05D23/00
(31) Priority Document No :12/982838
(32) Priority Date :30/12/2010
(33) Name of priority country :U.S.A.
(86) International Application No :PCT/US2011/067332
Filing Date :27/12/2011
(87) International Publication No :WO 2012/092239
(61) Patent of Addition to Application Number :NA
Filing Date :NA
(62) Divisional to Application Number :NA
Filing Date :NA

(71)**Name of Applicant :**
1)SCHNEIDER ELECTRIC IT CORPORATION
Address of Applicant :132 Fairgrounds Road West Kingston RI 02892 U.S.A.
(72)**Name of Inventor :**
1)HEALEY Christopher M.
2)ZHANG Xuanhang

(57) Abstract :
A computer implemented method for sequential placement of cooling resources in a data center comprises: defining a weighted higher order cooling metric representing an overall performance of the cooling resources in the data center; enumerating all possible locations in the data center for placing an additional c cooling resources; and placing the c cooling resources in locations in the data center for which is closest to an optimum value. For a performance metric the weighted higher order cooling performance metric can be defined as where R represents a number of racks in the data center C represents a total number of cooling resources placed in the data center i represents one of the R racks in the data center M represents a value of metric M when k cooling resources are shut down and a(i k) is a weighting function for rack i with the k cooling resources shut down. A system performing the method and computer readable media having stored thereon instructions causing a processor to perform the method are also provided.

No. of Pages : 36 No. of Claims : 20

(12) PATENT APPLICATION PUBLICATION
(19) INDIA
(22) Date of filing of Application :19/07/2013
(21) Application No.5845/CHENP/2013 A
(43) Publication Date : 05/09/2014

(54) Title of the invention : STEAM IRONING DEVICE

(51) International classification :D06F75/10,D06F75/26
(31) Priority Document No :10196803.0
(32) Priority Date :23/12/2010
(33) Name of priority country :EPO
(86) International Application No :PCT/IB2011/055597
Filing Date :12/12/2011
(87) International Publication No :WO 2012/085746
(61) Patent of Addition to Application Number :NA
Filing Date :NA
(62) Divisional to Application Number :NA
Filing Date :NA

(71)**Name of Applicant :**
1)KONINKLIJKE PHILIPS ELECTRONICS N.V.
Address of Applicant :High Tech Campus 5 NL 5656 AE Eindhoven Netherlands
(72)**Name of Inventor :**
1)ONG Chee Keong
2)VALIYAMBATH KRISHNAN Mohankumar
3)CHING Boon Khian
4)LIM Gary Chi Yang
5)FONG Wai Hong

(57) Abstract :
A steam ironing device (1) comprising: an iron including a soleplate (18) provided with at least one steam outlet opening (20); soleplate heating means (22) configured to heat the soleplate (18); a steam generator (50) including a heatable steam generation chamber (51) that is fluidly connectable to the at least one steam outlet opening (20) in the soleplate; and control means (24 56) operably connected to the soleplate heating means (22) and the steam generator (50) and configured to control a soleplate temperature and a steam rate of the steam ironing device wherein the control means (24 56) are configured to heat the soleplate to a non user adjustable temperature in the range of 105 145°C and to provide for a time averaged steam rate of at least 50 grams/minute.

No. of Pages : 21 No. of Claims : 10

(12) PATENT APPLICATION PUBLICATION
(19) INDIA
(22) Date of filing of Application :19/07/2013
(21) Application No.5846/CHENP/2013 A
(43) Publication Date : 05/09/2014

(54) Title of the invention : AUTOMATED IDENTIFICATION OF THE LOCATION OF A REGURGITANT ORIFICE OF A MITRAL VALVE IN AN ULTRASOUND IMAGE

(51) International classification :A61B8/08,A61B8/06
(31) Priority Document No :61/426669
(32) Priority Date :23/12/2010
(33) Name of priority country :U.S.A.
(86) International Application No :PCT/IB2011/055744
Filing Date :16/12/2011
(87) International Publication No :WO 2012/085798
(61) Patent of Addition to Application Number :NA
Filing Date :NA
(62) Divisional to Application Number :NA
Filing Date :NA

(71)**Name of Applicant :**
1)KONINKLIJKE PHILIPS ELECTRONICS N.V.
Address of Applicant :High Tech Campus 5 NL 5656 AE Eindhoven Netherlands
(72)**Name of Inventor :**
1)WEI Qifeng
2)THIELE Karl Erhard
3)YOGANATHAN Ajit
4)YAP Choon Hwai

(57) Abstract :
An ultrasonic diagnostic imaging system is described which quantifies regurgitant flow through a mitral valve including the automatic indication of the location of a regurgitant orifice in an ultrasound image. A clinician images the regurgitant valve and indicates in the image the presumed location of the regurgitant orifice (130). A flow quantification processor is responsive to this initial location estimate by the clinician to calculate a refined estimation of the orifice location. The refined location is indicated on the ultrasound image by the imaging system either by relocating an icon placed by the clinician or displaying a second icon (132) on the image at the refined location.

No. of Pages : 34 No. of Claims : 15

(12) PATENT APPLICATION PUBLICATION
(19) INDIA
(22) Date of filing of Application :04/06/2013
(21) Application No.4275/CHENP/2013 A
(43) Publication Date : 05/09/2014

(54) Title of the invention : FORMATE SALTS FOR INCREASED STABILITY OF POLYACRYLAMIDE FLUIDS

(51) International classification :C09K8/58,C09K8/60,C09K8/34
(31) Priority Document No :12/942120
(32) Priority Date :09/11/2010
(33) Name of priority country :U.S.A.
(86) International Application No:PCT/IB2011/054977
Filing Date :08/11/2011
(87) International Publication No :WO 2012/063199
(61) Patent of Addition to Application Number :NA
Filing Date :NA
(62) Divisional to Application Number :NA
Filing Date :NA

(71)**Name of Applicant :**
1)PRAD RESEARCH AND DEVELOPMENT LIMITED
Address of Applicant :P.O. Box 71 Craigmuir Chambers Road Town Tortola Virgin Island British GB 1110 VIRGIN ISLANDS
(72)**Name of Inventor :**
1)LIN Lijun
2)PHATAK Alhad
3)LI Leiming
4)ABAD Carlos

(57) Abstract :
Methods and apparatus for using a fluid within a subterranean formation including forming a fluid comprising an acrylamide copolymer and a formate salt and introducing the fluid to the subterranean formation wherein a temperature of the formation is about 149 °C or warmer. Also methods and apparatus for a fluid for use within a subterranean formation including an acrylamide copolymer comprising polyacrylamide a formate salt comprising potassium and a crosslinker comprising zirconium. Additionally methods and apparatus for using a fluid within in a subterranean formation including forming a fluid comprising an acrylamide copolymer and a formate salt and introducing proppant into the fluid to form a mixture introducing the mixture to the subterranean formation wherein a temperature of the formation is about 149 °C or warmer.

No. of Pages : 15 No. of Claims : 10

(12) PATENT APPLICATION PUBLICATION
(21) Application No.4773/CHENP/2013 A
(19) INDIA
(22) Date of filing of Application :20/06/2013
(43) Publication Date : 05/09/2014

(54) Title of the invention : SHAFT SEALING DEVICE AND ROTARY MACHINE EQUIPPED THEREWITH

(51) International classification :F01D11/02,F02C7/28,F16J15/22
(31) Priority Document No :2010290144
(32) Priority Date :27/12/2010
(33) Name of priority country :Japan
(86) International Application No :PCT/JP2011/079545
Filing Date :20/12/2011
(87) International Publication No :WO 2012/090793
(61) Patent of Addition to Application Number :NA
Filing Date :NA
(62) Divisional to Application Number :NA
Filing Date :NA

(71)**Name of Applicant :**
1)MITSUBISHI HEAVY INDUSTRIES LTD.
Address of Applicant :16 5 Konan 2 chome Minato ku Tokyo 1088215 Japan
(72)**Name of Inventor :**
1)SHINOHARA Tanehiro
2)UEHARA Hidekazu
3)NISHIMOTO Shin
4)NAKANO Takashi

(57) Abstract :
This shaft sealing device and rotary machine equipped therewith are provided with: a sealing body (12) configured by stacking in the circumferential direction of a rotating shaft (6) a plurality of thin sealing pieces (20) extending from a housing (9) towards the inside of the rotation shaft (6) in the radial direction; and a low pressure side side sealing plate (17) which is arranged along the low pressure side of the sealing body (12) and in which a plate surface (17d) facing the low pressure side is pressed against the inner wall surface (9e) of the housing (9) by means of the fluid pressure applied from the high pressure side to the low pressure side the aforementioned inner wall surface (9e) facing the axis line direction. A protrusion (9f) for blocking the downward flow (9) towards the inside of the low pressure side side sealing plate (17) in the radial direction along the low pressure side of the sealing body (12) is formed on the inside of the low pressure side side sealing plate (17) in the radial direction and a communication path (9g) for guiding to a low pressure side region the downward flow (d) blocked by means of the protrusion (9f) is formed on the housing (9).

No. of Pages : 45 No. of Claims : 6

(12) PATENT APPLICATION PUBLICATION
(21) Application No.5228/CHENP/2013 A
(19) INDIA
(22) Date of filing of Application :03/07/2013
(43) Publication Date : 05/09/2014

(54) Title of the invention : SYSTEM AND METHOD FOR DISPLAYING INTERACTIVE INFORMATION

(51) International classification :G06F3/00
(31) Priority Document No :13/015429
(32) Priority Date :27/01/2011
(33) Name of priority country :U.S.A.
(86) International Application No :PCT/US2012/020641
Filing Date :09/01/2012
(87) International Publication No :WO 2012/102848
(61) Patent of Addition to Application Number :NA
Filing Date :NA
(62) Divisional to Application Number :NA
Filing Date :NA

(71)**Name of Applicant :**
1)SONY CORPORATION
Address of Applicant :1 7 1 Konan Minato ku Tokyo 108 0075 Japan
(72)**Name of Inventor :**
1)BARNS Tracy
2)YI Hyehoon

(57) Abstract :
A system and method for interactively presenting content related information to facilitate user setting modification. The method includes accessing content from a content source which comprises a plurality of information associated with the content and displaying a banner comprising a portion of the plurality of information. A piece of the plurality of information associated with the content is selectable by the user via on screen elements. The method further includes receiving a selection of the piece of information of the plurality of information associated with the content and performing a function associated with the piece of information of the plurality of information associated with the content e.g. modifying a television setting related to the selected information.

No. of Pages : 43 No. of Claims : 20

(12) PATENT APPLICATION PUBLICATION
(19) INDIA
(22) Date of filing of Application :22/07/2013
(21) Application No.5858/CHENP/2013 A
(43) Publication Date : 05/09/2014

(54) Title of the invention : DISPLAY PANEL

(51) International classification :G02F1/1335
(31) Priority Document No :61/442394
(32) Priority Date :14/02/2011
(33) Name of priority country :U.S.A.
(86) International Application No :PCT/KR2012/000161
Filing Date :06/01/2012
(87) International Publication No :WO 2012/111916
(61) Patent of Addition to Application Number :NA
Filing Date :NA
(62) Divisional to Application Number :NA
Filing Date :NA

(71)**Name of Applicant :**
1)SAMSUNG ELECTRONICS CO. LTD.
Address of Applicant :129 Samsung ro Yeongtong gu Suwon si Gyeonggi do 443 742 Republic of Korea
(72)**Name of Inventor :**
1)CHUNG Seong Eun
2)KIM Dong Hwan
3)KIM Tae Bae
4)JUNG Il Yong

(57) Abstract :
A display panel and a display apparatus having the same are provided. The display panel includes a liquid crystal layer and comprises first and second substrates which are disposed opposite to each other; a color filter polarizing layer which formed on one surface between the first and second substrates and which includes a first metal linear grid arranged at different pitches to emit a first polarized component of incident light with different colors; and a polarizing layer which includes a second metal linear grid formed on an opposite surface to the surface between the first and second substrates wherein a metal material contained in the first metal linear grid is different from a metal material contained in the second metal linear grid. The provided display panel and display apparatus including the same have decreased manufacturing costs and a simplified manufacturing process.

No. of Pages : 43 No. of Claims : 12

(12) PATENT APPLICATION PUBLICATION
(19) INDIA
(22) Date of filing of Application :12/06/2013
(21) Application No.4510/CHENP/2013 A
(43) Publication Date : 05/09/2014

(54) Title of the invention : DIETHYL ZINC COMPOSITION METHOD FOR THERMAL STABILIZATION AND COMPOUND FOR THERMAL STABILIZATION

(51) International classification :C07F3/06,C07C11/12,C07C13/23
(31) Priority Document No :2010281787
(32) Priority Date :17/12/2010
(33) Name of priority country :Japan
(86) International Application No :PCT/JP2011/007019
Filing Date :15/12/2011
(87) International Publication No :WO 2012/081254
(61) Patent of Addition to Application Number :NA
Filing Date :NA
(62) Divisional to Application Number :NA
Filing Date :NA

(71)**Name of Applicant :**
1)TOSOH FINECHEM CORPORATION
Address of Applicant :4555 banchi Kaisei cho Shunan shi Yamaguchi 7460006 Japan
(72)**Name of Inventor :**
1)HAGA Kenichi
2)TOMIYASU Shizuo
3)TOKUDOME Kohichi
4)TOYOTA Kouji
5)INABA Koichiro

(57) Abstract :
[Problem] To provide a diethyl zinc composition that improves the heat stability of the diethyl zinc used for a polymerization catalyst a reagent in organic synthesis a starting material for producing a zinc oxide thin film by a MOCVD method and the like; and that is excellent in terms of heat stability so that metallic zinc particles are not deposited even over long term handling. [Solution] The diethyl zinc composition used is obtained by adding a compound having a specific carbon carbon double bond to diethyl zinc.

No. of Pages : 32 No. of Claims : 15

(12) PATENT APPLICATION PUBLICATION
(19) INDIA
(22) Date of filing of Application :20/06/2013
(21) Application No.4823/CHENP/2013 A
(43) Publication Date : 05/09/2014

(54) Title of the invention : SYSTEM AND METHOD FOR MULTI CHANNEL PACKET TRANSMISSION

(51) International classification :H04L12/56,H04W28/10,H04W72/00
(31) Priority Document No :10306463.0
(32) Priority Date :20/12/2010
(33) Name of priority country :EPO
(86) International Application No :PCT/EP2011/072541
Filing Date :13/12/2011
(87) International Publication No :WO 2012/084597
(61) Patent of Addition to Application Number :NA
Filing Date :NA
(62) Divisional to Application Number :NA
Filing Date :NA

(71)**Name of Applicant :**
1)ALCATEL LUCENT
Address of Applicant :3 avenue Octave Grard F 75007 Paris France
(72)**Name of Inventor :**
1)PASOTTI Marco
2)DI PRISCO Paulo
3)CORBETTA Giuliano
4)BARZAGHI Giorgio
5)VODOLA Francesco
6)DE BLASIO Giuseppe
7)GEROSA Marzio
8)SALGARELLI Luca
9)GRINGOLI Francesco

(57) Abstract :
A method of transmitting packets wherein said packets are comprised in a plurality of flows the flows comprising flow characteristics controlling admission of incoming flows. A plurality of admitted incoming flows with the same class of service are inserted into a queue. A committed information rate value corresponding to said queue and a bandwidth available for transmission of said queue according to the identified committed information rate value are identified. An order for transmission for the queues is established based on the class of service of the queue and the identified bandwidth. A plurality of cells of the same size are generated from a plurality of frames and the cells are distributed between a plurality of individual transmission channels according to the ordered defined for transmission. A transmitter equipment and a receiver equipment are also disclosed.

No. of Pages : 34 No. of Claims : 15

(12) PATENT APPLICATION PUBLICATION
(19) INDIA
(22) Date of filing of Application :08/07/2013

(21) Application No.5394/CHENP/2013 A
(43) Publication Date : 05/09/2014

(54) Title of the invention : NOVEL PHARMACEUTICAL FORMULATION COMPRISING NSAID AND CYCLODEXTRIN

(51) International classification :A61K31/192,A61K31/196,A61K9/00
(31) Priority Document No :1021267.8
(32) Priority Date :15/12/2010
(33) Name of priority country :U.K.
(86) International Application No :PCT/GB2011/052457
Filing Date :12/12/2011
(87) International Publication No :WO 2012/080718
(61) Patent of Addition to Application Number :NA
Filing Date :NA
(62) Divisional to Application Number :NA
Filing Date :NA

(71)**Name of Applicant :**
1)RECKITT BENCKISER HEALTHCARE INTERNATIONAL LIMITED
Address of Applicant :103 105 Bath Road Slough Berkshire SL1 3UH U.K.
(72)**Name of Inventor :**
1)BEECH Edward
2)RODWELL Alden
3)SQUIRES Mark

(57) Abstract :
The present invention provides a liquid composition in comprising an aqueous solution of an NSAID and one or more cyclodextrins.

No. of Pages : 17 No. of Claims : 35

(12) PATENT APPLICATION PUBLICATION
(21) Application No.5630/CHENP/2013 A
(19) INDIA
(22) Date of filing of Application :16/07/2013
(43) Publication Date : 05/09/2014

(54) Title of the invention : MONOTONOUS GAME LIKE TASK TO PROMOTE EFFORTLESS AUTOMATIC RECOGNITION OF SIGHT WORDS

(51) International classification :G09B17/00,G09B5/00
(31) Priority Document No :61/425845
(32) Priority Date :22/12/2010
(33) Name of priority country :U.S.A.
(86) International Application No :PCT/IB2011/003306
Filing Date :19/12/2011
(87) International Publication No :WO 2012/095695
(61) Patent of Addition to Application Number :NA
Filing Date :NA
(62) Divisional to Application Number :NA
Filing Date :NA

(71)**Name of Applicant :**
1)BRIGHTSTAR LEARNING
Address of Applicant :Malcha Technology Park Building 1 A 4th Floor 96951 Jerusalem Israel
(72)**Name of Inventor :**
1)KULLOK Jose Roberto
2)KULLOK Saul

(57) Abstract :
System and methods are provided to promote effortless automatic recognition of common sight words. A subject performs a game like task that generates novel non verbal visual stimuli that triggers visual attention shifts that enhance foveal and parafoveal recognition of non verbal and verbal stimuli laterally presented in the right or left visual field. The present invention engages a shared motor perceptual cognitive neural network involving oculomotor visuo motor and selective executive cognitive behaviors on both brain hemispheres. The present invention has applications to a wide range of non verbal pre orthographic visual processes and early lexical processes not only contributing to enabling reading fluency to dyslexics reluctant and slow readers but also to beginning readers. The present invention has wide applications in learning disabilities and normative individuals learning to read.

No. of Pages : 98 No. of Claims : 78

(12) PATENT APPLICATION PUBLICATION
(19) INDIA
(22) Date of filing of Application :23/07/2013
(21) Application No.5869/CHENP/2013 A
(43) Publication Date : 05/09/2014

(54) Title of the invention : CORONA IGNITER HAVING IMPROVED GAP CONTROL

(51) International classification :H01T13/50,H01T21/02
(31) Priority Document No :61/427960
(32) Priority Date :29/12/2010
(33) Name of priority country :U.S.A.
(86) International Application No :PCT/US2011/067736
Filing Date :29/12/2011
(87) International Publication No :WO 2012/092432
(61) Patent of Addition to Application Number :NA
Filing Date :NA
(62) Divisional to Application Number :NA
Filing Date :NA

(71)**Name of Applicant :**
1)FEDERAL MOGUL IGNITION COMPANY
Address of Applicant :26555 Northwestern Highway Southfield MI 48033 U.S.A.
(72)**Name of Inventor :**
1)BURROWS John A.
2)LYKOWSKI James D.
3)HOFFMAN John W.

(57) Abstract :
A corona igniter (20) includes an electrode gap (28) between the central electrode (22) and the insulator (32) and a shell gap (30) between the insulator (32) and the shell (36). An electrically conductive coating (40) is disposed on the insulator (32) along the gaps (28 30) to prevent corona discharge (24) in the gaps (28 30) and to concentrate the energy at a firing tip (58) of the central electrode (22). The electrically conductive coating (40) is disposed on an insulator inner (surface 64) and is spaced radially from the electrode (22). The electrically conductive coating (40) is also disposed on the insulator outer surface (72) and is spaced radially from the shell (36). During operation of the igniter (20) the electrically conductive coating (40) provides a reduced voltage drop across the gaps (28 30) and a reduced electric field spike at the gaps (28 30).

No. of Pages : 30 No. of Claims : 20

(12) PATENT APPLICATION PUBLICATION
(21) Application No.5627/CHENP/2013 A
(19) INDIA
(22) Date of filing of Application :15/07/2013
(43) Publication Date : 05/09/2014

(54) Title of the invention : PLATE SYNTHESIZED BY WASTE CIRCUIT BOARD POWDER AND MANUFACTURING PROCESS THEREOF

(51) International classification	:C08L61/06,C08K3/00	(71)**Name of Applicant :**
(31) Priority Document No	:NA	**1)FOSHAN WEP ENVIRONMENTAL PROTECTION TECHNOLOGY CO. LTD**
(32) Priority Date	:NA	Address of Applicant :No.3 Kaiyuan Road Datang Town Industrial Park Sanshui District Foshan Guangdong 528143 China
(33) Name of priority country	:NA	(72)**Name of Inventor :**
(86) International Application No	:PCT/CN2010/080524	**1)XIAO Chaofeng**
Filing Date	:30/12/2010	
(87) International Publication No	:WO 2012/088694	
(61) Patent of Addition to Application Number	:NA	
Filing Date	:NA	
(62) Divisional to Application Number	:NA	
Filing Date	:NA	

(57) Abstract :
The material used for manufacturing the plate includes: powder recycled from circuit board wood fiber powder crosslinker waterproof agent and carbon filament fiber. The manufacturing process includes the following steps: drying the powder recycled from circuit board at a constant temperature; processing the high fiber auxiliary materials into wood fiber powder with a particle size of over 80 mesh drying and then stirring the wood fiber powder to obtain carbon fiber powder; adding processing agents and mixing uniformly again; charging the mixed material into a paving system pressing placing repressing and then relieving pressure. The plate has good processing properties high water resistance high fire resistance and high static bending strength.

No. of Pages : 33 No. of Claims : 10

(12) PATENT APPLICATION PUBLICATION
(21) Application No.5629/CHENP/2013 A
(19) INDIA
(22) Date of filing of Application :15/07/2013
(43) Publication Date : 05/09/2014

(54) Title of the invention : METHOD AND APPARATUS FOR CODING AND PROCESSING ACKNOWLEDGEMENT INFORMATION

(51) International classification	:H04L1/16	(71)**Name of Applicant :**
(31) Priority Document No	:201110009349.8	**1)HUAWEI TECHNOLOGIES CO. LTD.**
(32) Priority Date	:17/01/2011	Address of Applicant :Huawei Administration Building
(33) Name of priority country	:China	Bantian Longgang Shenzhen Guangdong 518129 China
(86) International Application No	:PCT/CN2012/070488	(72)**Name of Inventor :**
Filing Date	:17/01/2012	**1)FAN Xiaoan**
(87) International Publication No	:WO 2012/097726	**2)LV Yongxia**
(61) Patent of Addition to Application Number	:NA	**3)CHEN Xiaofeng**
Filing Date	:NA	
(62) Divisional to Application Number	:NA	
Filing Date	:NA	

(57) Abstract :
The present invention provides a method and apparatus for feedbacking acknowledge(ACK) information wherein said method for coding the ACK information includes: receiving a member carrier wave including at least one downlink subframe; generating according to the received member carrier wave the ACK information bits corresponding to the member carrier wave; dividing said ACK information bits into two groups each of which includes at least one ACK information bit corresponding to the Physical Downlink Shared Channel(PDSCH) transmission and/or Downlink Control Information(DCI) indicating the end of the downlink Semi Persistent Scheduling(SPS); obtaining two groups of codeword bits by respectively coding said two groups of ACK information bits; and generating according to the two groups of codeword bits obtained through respective coding the total codeword bits to be transmitted. In addition a method for receiving ACK information an apparatus for coding ACK information and an apparatus for processing ACK information are also provided.

No. of Pages : 100 No. of Claims : 39

(12) PATENT APPLICATION PUBLICATION
(19) INDIA
(22) Date of filing of Application :23/07/2013
(21) Application No.5860/CHENP/2013 A
(43) Publication Date : 05/09/2014

(54) Title of the invention : COAXIAL INLET AND OUTLET EXHAUST TREATMENT DEVICE

(51) International classification :F01N3/10,F01N3/02,F01N3/36
(31) Priority Document No :61/437896
(32) Priority Date :31/01/2011
(33) Name of priority country :U.S.A.
(86) International Application No :PCT/US2012/022861
Filing Date :27/01/2012
(87) International Publication No :WO 2012/106193
(61) Patent of Addition to Application Number :NA
Filing Date :NA
(62) Divisional to Application Number :NA
Filing Date :NA

(71)**Name of Applicant :**
1)TENNECO AUTOMOTIVE OPERATING COMPANY INC.
Address of Applicant :500 North Field Drive Lake Forest Illinois 60045 U.S.A.
(72)**Name of Inventor :**
1)MORLEY Nicholas
2)DALIMONTE Lawrence
3)SANDHU Jagandeep

(57) Abstract :
A burner for an exhaust gas treatment system treats an exhaust flow from an engine and includes an inner housing defining a primary combustion zone and a secondary combustion zone. The inner housing includes a plurality of apertures upstream of the secondary combustion zone for receipt of a first portion of the exhaust flow. An outer housing surrounds the inner housing to define a bypass flow path between the inner and outer housings to bypass a second portion of the exhaust flow around the inner housing outside of the primary and secondary combustion zones. The outer housing includes an exhaust inlet coaxially aligned with an exhaust outlet along a central longitudinal axis. A mixing zone is provided downstream of the second combustion chamber in receipt of the first and second portions of the exhaust flow.

No. of Pages : 16 No. of Claims : 15

(12) PATENT APPLICATION PUBLICATION
(19) INDIA
(22) Date of filing of Application :23/07/2013
(21) Application No.5861/CHENP/2013 A
(43) Publication Date : 05/09/2014

(54) Title of the invention : SERRATIA PLYMUTHICA FOR BIOLOGICAL CONTROL OF BACTERIAL PLANT PATHOGENS

(51) International classification :C12R1/425,A01H3/00,A01H17/00
(31) Priority Document No :1100427.2
(32) Priority Date :11/01/2011
(33) Name of priority country :U.K.
(86) International Application No :PCT/EP2012/050320
Filing Date :10/01/2012
(87) International Publication No :WO 2012/095431
(61) Patent of Addition to Application Number :NA
Filing Date :NA
(62) Divisional to Application Number :NA
Filing Date :NA

(71)**Name of Applicant :**
1)STICHTING DIENST LANDBOUWKUNDIG ONDERZOEK
Address of Applicant :Droevendaalsesteeg 4 NL 6708 PB Wageningen Netherlands
2)STICHTING VOOR DE TECHNISCHE WETENSCHAPPEN
(72)**Name of Inventor :**
1)VAN DER WOLF Jean Martin
2)CZAJKOWSKI Robert Lukasz
3)VAN VEEN Johannes Antonie

(57) Abstract :
Serratia plymuthicaDickeyaPectobacteriumRalstoniaDickeya strain A30 BCCM Deposit No. LMG P 26170 its analogues or functionally equivalent strains thereto provides a biological control agent against plant disease caused by a bacterial pathogen particularly a soft rot e.g. blackleg. The pathogen is spp. spp. and spp.; including sp. biovar 3 strain. The deposited strain and its variants are formulated in an agriculturally or horticulturally acceptable diluent carrier filler or adjuvant. Plants or plant parts particularly potato tubers containing the deposited strain provide useful propagation material free of soft rot or blackleg disease.

No. of Pages : 51 No. of Claims : 18

(12) PATENT APPLICATION PUBLICATION
(19) INDIA
(22) Date of filing of Application :05/07/2013
(21) Application No.5299/CHENP/2013 A
(43) Publication Date : 05/09/2014

(54) Title of the invention : NOVEL FUCOSYLTRANSFERASES AND THEIR APPLICATIONS

(51) International classification :C12N9/10,C12P19/18
(31) Priority Document No :11151571.4
(32) Priority Date :20/01/2011
(33) Name of priority country :EPO
(86) International Application No :PCT/EP2011/074291
Filing Date :30/12/2011
(87) International Publication No :WO 2012/097950
(61) Patent of Addition to Application Number :NA
Filing Date :NA
(62) Divisional to Application Number :NA
Filing Date :NA

(71)**Name of Applicant :**
1)JENNEWEIN BIOTECHNOLOGIE GMBH
Address of Applicant :Maarweg 32 53619 Rheinbreitbach Germany
(72)**Name of Inventor :**
1)PARKOT Julia
2)HUEFNER Eric
3)JENNEWEIN Stefan
4)ELLING Lothar
5)ENGELS Leonie

(57) Abstract :
The present invention relates to nucleic acid and amino acid sequences from serogroup O126 coding for/representing a novel alpha 1 2 fucosyltransferase. The invention also provides uses and methods for using the alpha 1 2 fucosyltransferase to generate fucosylated products such as oligosaccharides (glyco)proteins or (glyco)lipids in particular oligosaccharides found in human milk such as 2 fucosyllactose.

No. of Pages : 45 No. of Claims : 18

(12) PATENT APPLICATION PUBLICATION
(19) INDIA
(22) Date of filing of Application :09/07/2013
(21) Application No.5406/CHENP/2013 A
(43) Publication Date : 05/09/2014

(54) Title of the invention : LED BASED ASSEMBLY

(51) International classification :F21S2/00,F21V21/005,F21Y101/02
(31) Priority Document No :10306425.9
(32) Priority Date :16/12/2010
(33) Name of priority country:EPO
(86) International Application No :PCT/IB2011/055541
Filing Date :08/12/2011
(87) International Publication No :WO 2012/080911
(61) Patent of Addition to Application Number :NA
Filing Date :NA
(62) Divisional to Application Number :NA
Filing Date :NA

(71)**Name of Applicant :**
1)KONINKLIJKE PHILIPS ELECTRONICS N.V.
Address of Applicant :High Tech Campus 5 NL 5656 AE Eindhoven Netherlands
(72)**Name of Inventor :**
1)TREANTON Vincent
2)MAUGY Vincent

(57) Abstract :
The invention refers to a LED based assembly (100) comprising: an electrical device comprising circuit boards (110 1 110 2) arranged to drive and/or supply arrays of LEDs (111 1 111 2) electrically and mechanically connected thereto; an optical device provided onto the electrical device and comprising optical boards (120) partly mounted onto the circuit boards (110 1 110 2).

No. of Pages : 23 No. of Claims : 14

(12) PATENT APPLICATION PUBLICATION
(19) INDIA
(22) Date of filing of Application :11/07/2013
(21) Application No.5524/CHENP/2013 A
(43) Publication Date : 05/09/2014

(54) Title of the invention : COMBINATION OF COMPONENTS FOR THE PREVENTION AND TREATMENT OF FRAILTY

(51) International classification :A61K31/14,A61K31/202,A61K31/355
(31) Priority Document No :PCT/NL2010/050892
(32) Priority Date :28/12/2010
(33) Name of priority country :Netherlands
(86) International Application No :PCT/NL2011/050908
Filing Date :28/12/2011
(87) International Publication No :WO 2012/091571
(61) Patent of Addition to Application Number :NA
Filing Date :NA
(62) Divisional to Application Number :NA
Filing Date :NA

(71)**Name of Applicant :**
1)N.V. NUTRICIA
Address of Applicant :Eerste Stationsstraat 186 NL 2712 HM Zoetermeer Netherlands
(72)**Name of Inventor :**
1)HAGEMAN Robert Johan Joseph
2)DE WILDE Mattheus Cornelis
3)GROENENDIJK Martine
4)KAMPHUIS Patrick Joseph Gerardus Hendrikus

(57) Abstract :
Composition comprising at least two components more preferably at least three components more preferably at least four components selected from the group of (i) a nucleoside equivalent (ii) an 3 polyunsaturated fatty acid selected from the group of DHA DPA and EPA (iii) a vitamin B (iv) a phospholipid (v) an antioxidant and (vi) a choline with the proviso that at least component (i) or (iii) is present for use in the prevention or treatment of frailty in a mammal wherein frailty is determined by compliance with at least 2 criterions preferably 3 criterions selected from the group of muscle weakness excessive feelings of exhaustion or fatigue abnormally low physical activity slow or unsteady gait weight loss and neurological dysfunction.

No. of Pages : 70 No. of Claims : 20

(12) PATENT APPLICATION PUBLICATION
(21) Application No.5863/CHENP/2013 A
(19) INDIA
(22) Date of filing of Application :23/07/2013
(43) Publication Date : 05/09/2014

(54) Title of the invention : RAILROAD HANDBRAKE CHAIN TENSION CONDITION SENSING DEVICE AND METHOD

(51) International classification :B61H13/02,G01L5/06,B60T7/08
(31) Priority Document No :13/028480
(32) Priority Date :16/02/2011
(33) Name of priority country :U.S.A.
(86) International Application No :PCT/US2012/024460
Filing Date :09/02/2012
(87) International Publication No :WO 2012/112375
(61) Patent of Addition to Application Number :NA
Filing Date :NA
(62) Divisional to Application Number :NA
Filing Date :NA

(71)**Name of Applicant :**
1)WABTEC HOLDING CORP.
Address of Applicant :1001 Air Brake Avenue Wilmerding Pennsylvania 15148 U.S.A.
(72)**Name of Inventor :**
1)GREGAR Peter
2)MARLOW Jonathon

(57) Abstract :
Chain tension sensing device includes a hollow enclosure a sensor mounted in a stationary position within enclosure and a member mounted for a reciprocal movement in a substantially linear direction relative to the sensor. The member includes a chain engaging first portion a second portion mounted for reciprocal movement and a sensor target disposed on a distal end of the second portion. A compressible resilient member is mounted in abutting engagement with at least a rear surface of the first portion. Chain take up attains tension thereon generating force and moving the member towards the sensor so as to position the sensor target in operative sensing alignment therewith. Chain let up causes the compressible resilient member to move the member in an opposite direction removing the sensor target from the operative sensing alignment with the sensor.

No. of Pages : 23 No. of Claims : 20

(12) PATENT APPLICATION PUBLICATION
(19) INDIA
(22) Date of filing of Application :23/07/2013
(21) Application No.5865/CHENP/2013 A
(43) Publication Date : 05/09/2014

(54) Title of the invention : MATURE LEAF SPECIFIC PROMOTER

(51) International classification :C07K14/415,C12N15/82,A01H5/12
(31) Priority Document No :2010293783
(32) Priority Date :28/12/2010
(33) Name of priority country :Japan
(86) International Application No :PCT/JP2011/007337
Filing Date :28/12/2011
(87) International Publication No :WO 2012/090499
(61) Patent of Addition to Application Number :NA
Filing Date :NA
(62) Divisional to Application Number :NA
Filing Date :NA

(71)**Name of Applicant :**
1)TOYOTA JIDOSHA KABUSHIKI KAISHA
Address of Applicant :1 Toyota cho Toyota shi Aichi 4718571 Japan
(72)**Name of Inventor :**
1)HATTORI Etsuko
2)NISHIMURA Satoru
3)ITO Kazuyo

(57) Abstract :
The present invention provides gene expression regulatory DNA having activity of promoting gene expression in a mature leaf specific manner. The following is provided: gene expression regulatory DNA having activity of promoting gene expression in a mature leaf specific manner which comprises any one of the following (a) to (d): (a) DNA consisting of the nucleotide sequence shown in SEQ ID NO: 1 or SEQ ID NO: 4; (b) DNA consisting of a nucleotide sequence that has a deletion a substitution an addition or an insertion of one or a plurality of nucleotides in the nucleotide sequence shown in SEQ ID NO: 1 or SEQ ID NO: 4 and having activity of promoting gene expression in a mature leaf specific manner; (c) DNA consisting of a nucleotide sequence having 90% or more sequence identity to the nucleotide sequence shown in SEQ ID NO: 1 or SEQ ID NO: 4 and having activity of promoting gene expression in a mature leaf specific manner; and (d) DNA hybridizing under stringent conditions to DNA consisting of a sequence complementary to a part or the entirety of the nucleotide sequence shown in SEQ ID NO: 1 or SEQ ID NO: 4 and having activity of promoting gene expression in a mature leaf specific manner.

No. of Pages : 24 No. of Claims : 4

(12) PATENT APPLICATION PUBLICATION
(19) INDIA
(22) Date of filing of Application :04/06/2013
(21) Application No.4295/CHENP/2013 A
(43) Publication Date : 05/09/2014

(54) Title of the invention : PYRAZINO[2 3 D]ISOOXAZOLE DERIVATIVE

(51) International classification :C07D498/04,C07C239/18,C07D241/24
(31) Priority Document No :2010253414
(32) Priority Date :12/11/2010
(33) Name of priority country :Japan
(86) International Application No :PCT/JP2011/076029
Filing Date :11/11/2011
(87) International Publication No :WO 2012/063931
(61) Patent of Addition to Application Number :NA
Filing Date :NA
(62) Divisional to Application Number :NA
Filing Date :NA

(71)**Name of Applicant :**
1)FUJIFILM CORPORATION
Address of Applicant :26 30 Nishiazabu 2 chome Minato ku Tokyo 1060031 Japan
2)TOYAMA CHEMICAL CO. LTD.
(72)**Name of Inventor :**
1)NAKAMURA Kouki
2)MURAKAMI Takeshi
3)NAITOU Hiroyuki
4)HANAKI Naoyuki
5)WATANABE Katsuyuki

(57) Abstract :
The object of the present invention is to provide a compound useful as an intermediate for the production of a pyrazinecarboxamide derivative such as 6 fluoro 3 hydroxy 2 pyrazinecarboxamide. The present invention provides a pyrazino[2 3 d]isooxazole derivative represented by general formula (I) (wherein X represents a halogen atom a hydroxy group or a sulfamoyloxy group; and Y represents C(=O)R or CN (wherein R represents a hydrogen atom an alkoxy group an aryloxy group an alkyl group an aryl group or an amino group)).

No. of Pages : 73 No. of Claims : 15

(12) PATENT APPLICATION PUBLICATION
(19) INDIA
(22) Date of filing of Application :03/07/2013
(21) Application No.5243/CHENP/2013 A
(43) Publication Date : 05/09/2014

(54) Title of the invention : METHOD FOR COORDINATED MULTIPOINT (COMP) TRANSMISSION/RECEPTION IN WIRELESS COMMUNICATION NETWORKS WITH RECONFIGURATION CAPABILITY

(51) International classification :H04W24/02,H04W92/20,H04W92/04
(31) Priority Document No :11157692.2
(32) Priority Date :10/03/2011
(33) Name of priority country :EPO
(86) International Application No :PCT/EP2012/053996
Filing Date :08/03/2012
(87) International Publication No :WO 2012/120077
(61) Patent of Addition to Application Number :NA
Filing Date :NA
(62) Divisional to Application Number :NA
Filing Date :NA

(71)**Name of Applicant :**
1)NTT DOCOMO INC.
Address of Applicant :Sanno Park Tower 36th Floor 11 1 Nagata cho 2 chome Chiyoda ku Tokyo 100 6150 Japan
(72)**Name of Inventor :**
1)CHOI Changsoon
2)SCALIA Luca
3)BIERMANN Thorsten
4)MIZUTA Shinji

(57) Abstract :
A method for coordinated multipoint communication in a wireless communication network is described. The wireless communication network has a plurality of base stations and a backhaul network connecting the plurality of base stations. The method includes selecting (S302) one or more cooperating base stations for a coordinated multipoint communication for a mobile unit serviced by a serving base station determining (S310) whether the backhaul network supports a coordinated multipoint technique selected for a cooperating base station and in case the backhaul network is not sufficient to support a coordinated multipoint technique for one or more of the cooperating base stations reconfiguring (S312) the backhaul network to meet the requirements of the coordinated multipoint technique.

No. of Pages : 32 No. of Claims : 15

(12) PATENT APPLICATION PUBLICATION
(21) Application No.5820/CHENP/2013 A
(19) INDIA
(22) Date of filing of Application :19/07/2013
(43) Publication Date : 05/09/2014

(54) Title of the invention : PHOTO ACOUSTIC SIGNAL ENHANCEMENT WITH MICROBUBBLE BASED CONTRAST AGENTS

(51) International classification :A61B5/00,A61K49/00
(31) Priority Document No :61/425808
(32) Priority Date :22/12/2010
(33) Name of priority country :U.S.A.
(86) International Application No :PCT/IB2011/055617
Filing Date :12/12/2011
(87) International Publication No :WO 2012/085751
(61) Patent of Addition to Application Number :NA
Filing Date :NA
(62) Divisional to Application Number :NA
Filing Date :NA

(71)**Name of Applicant :**
1)KONINKLIJKE PHILIPS ELECTRONICS N.V.
Address of Applicant :High Tech Campus 5 NL 5656 AE Eindhoven Netherlands
(72)**Name of Inventor :**
1)SHI William Tao
2)JANKOVIC Ladislav

(57) Abstract :
Bubbles (118 122) are utilized in some embodiments as part of a photoacoustic contrast agent (162) and in some embodiments to localize one or more locations (126 38) of a source of acoustic energy. The bubbles such as microbubbles can be used in proximity of nanoparticles of a first photoacoustic contrast agent thereby affording a second photoacoustic contrast agent. The bubbles can intercept and re radiate acoustic energy emitted by light based activation of the first photoacoustic contrast agent in the immediate vicinity of the bubbles. As a further option if the nanoparticles permeate further to tissue structures but remain in close enough proximity their positions can be triangulated by the nearby bubbles based on direction (144 148) and time delays (150 160) of ultrasound received by a transducerarray.

No. of Pages : 19 No. of Claims : 21

(12) PATENT APPLICATION PUBLICATION
(21) Application No.6148/CHENP/2013 A
(19) INDIA
(22) Date of filing of Application :23/07/2013
(43) Publication Date : 05/09/2014

(54) Title of the invention : METHODS AND DEVICES FOR COOKING RICE

(51) International classification :A47J36/32,A47J27/00
(31) Priority Document No :PCT/CN2010/080642
(32) Priority Date :31/12/2010
(33) Name of priority country :China
(86) International Application No :PCT/IB2011/055974
Filing Date :27/12/2011
(87) International Publication No :WO 2012/090159
(61) Patent of Addition to Application Number :NA
Filing Date :NA
(62) Divisional to Application Number :NA
Filing Date :NA

(71)**Name of Applicant :**
1)KONINKLIJKE PHILIPS ELECTRONICS N.V.
Address of Applicant :High Tech Campus 5 NL 5656 AE Eindhoven Netherlands
(72)**Name of Inventor :**
1)TAN Jingwei
2)KHAW Eng Cheng
3)ZHUANG Qian

(57) Abstract :
The invention proposes a method and a device for cooking rice. The device comprises a first container (110) for containing the rice together with water; a first heater (120 121 and 122) for heating the rice and the water in the container (110);and a regulator (130 31 132 133 and 134) for during the heating regulating the amount of water.

No. of Pages : 25 No. of Claims : 23

(12) PATENT APPLICATION PUBLICATION
(19) INDIA
(22) Date of filing of Application :23/07/2013
(21) Application No.6149/CHENP/2013 A
(43) Publication Date : 05/09/2014

(54) Title of the invention : A LIGHTING SYSTEM A LIGHT SOURCE A DEVICE AND A METHOD OF AUTHORIZING THE DEVICE BY THE LIGHT SOURCE

(51) International classification	:H05B37/02,H04W12/06,H04L29/06
(31) Priority Document No	:10197344.4
(32) Priority Date	:30/12/2010
(33) Name of priority country	:EPO
(86) International Application No	:PCT/IB2011/055823
Filing Date	:20/12/2011
(87) International Publication No	:WO 2012/090122
(61) Patent of Addition to Application Number	:NA
Filing Date	:NA
(62) Divisional to Application Number	:NA
Filing Date	:NA

(71)**Name of Applicant :**
1)KONINKLIJKE PHILIPS ELECTRONICS N.V.
Address of Applicant :High Tech Campus 5 NL 5656 AE Eindhoven Netherlands
(72)**Name of Inventor :**
1)GARCIA MORCHON Oscar
2)DENTENEER Theodorus Jacobus Johannes

(57) Abstract :
A lighting system (100) a light source (110) a device (150) and a method of authorizing the device (150) by the light source (110) are provided. The lighting system (100) comprises a light source (110) to emit light (116) a device (150) to control the light source(110) a first communication channel from the light source (110) to the device (150) and a second communication channel from the device (150) to the light source (110). The first communication channel is formed by modulating information in the emitted light (116) of the light source (110). The light source (110) comprises a challenge generator (118) a light source transmitter (112) a light source receiver (122) and an authorizing means (120). The challenge generator (118) generates a challenge with a cryptographic function receiving an argument comprising a first cryptographic key. The light source transmitter (112) transmits the challenge via the first communication channel. The light source receiver (122) receives a response from the device via the second communication channel. The authorizing means (120) authorizes the device (150) to control the light source (110) by matching the received response with a reference and if the received response matches the reference the device (150) is authorized. The device (150) comprises a device receiver (152) a response generator (154) and a device transmitter (156). The device receiver (152) receives the challenge via the first communication channel. The response generator (154) generates the response with the cryptographic function which receives arguments comprising the received challenge and a second cryptographic key. The device transmitter (156) transmits the response to the light source via the second communication channel.

No. of Pages : 35 No. of Claims : 15

(12) PATENT APPLICATION PUBLICATION
(19) INDIA
(22) Date of filing of Application :19/07/2013
(21) Application No.5821/CHENP/2013 A
(43) Publication Date : 05/09/2014

(54) Title of the invention : LED LIGHT BULB WITH LIGHT SCATTERING OPTICS STRUCTURE

(51) International classification :F21K99/00,F21V5/04,F21Y101/02
(31) Priority Document No :PCT/CN2010/080099
(32) Priority Date :22/12/2010
(33) Name of priority country :China
(86) International Application No :PCT/IB2011/055763
Filing Date :19/12/2011
(87) International Publication No :WO 2012/085809
(61) Patent of Addition to Application Number :NA
Filing Date :NA
(62) Divisional to Application Number :NA
Filing Date :NA

(71)**Name of Applicant :**
1)KONINKLIJKE PHILIPS ELECTRONICS N.V.
Address of Applicant :High Tech Campus 5 NL 5656 AE Eindhoven Netherlands
(72)**Name of Inventor :**
1)YUAN Chuan
2)LI Yun
3)SHEN Mo
4)PEI Zhigang
5)LIU Ye

(57) Abstract :
A LED light bulb (10 110 210) having at least one LED (30a d 230). Light output from the LED is directed toward an offset scattering optics structure (50 150 250) that intersects and scatters the light output. The LED may optionally be paired with a narrow beam optical piece (32a d 132a d 232) to focus and direct the light output of the LED toward the scattering optics structure. A mounting structure (40 140 240a 240b) may support the scattering optics structure and offset the scattering optics structure from the LED.

No. of Pages : 28 No. of Claims : 18

(12) PATENT APPLICATION PUBLICATION
(19) INDIA
(22) Date of filing of Application :23/07/2013
(21) Application No.6151/CHENP/2013 A
(43) Publication Date : 05/09/2014

(54) Title of the invention : METHOD AND APPARATUS FOR DECOCTING INGREDIENTS IN A SOLVENT

(51) International classification :A23F3/16,A23F5/24,B01D11/02
(31) Priority Document No :PCT/CN2010/002221
(32) Priority Date :30/12/2010
(33) Name of priority country :China
(86) International Application No :PCT/IB2011/055845
Filing Date :21/12/2011
(87) International Publication No :WO 2012/090126
(61) Patent of Addition to Application Number :NA
Filing Date :NA
(62) Divisional to Application Number :NA
Filing Date :NA

(71)**Name of Applicant :**
1)KONINKLIJKE PHILIPS ELECTRONICS N.V.
Address of Applicant :High Tech Campus 5 NL 5656 AE Eindhoven Netherlands
(72)**Name of Inventor :**
1)WEN Tao
2)WANG Gang

(57) Abstract :
The invention relates to an apparatus(1) for decocting ingredients (2) in a solvent (3) said apparatus comprising: a first container (4) for containing the solvent a pipe (5) connecting an output (O1) of said first container to an input (I1) of said first container a pump (6) placed in series with said pipe for circulating the solvent from said output (O1) to said input (I1) a second container (7) for containing the ingredients said second container being placed in series with said pipe such that the solvent circulating in the pipe can circulate in between the ingredients a wave generator (8) placed next to said second container for generating a field of waves (FW) towards the ingredients. The dynamic circulation of the solvent in combination with the application of a field of waves towards the ingredients allows accelerating the extraction of the compounds in the ingredients and leads to improved extraction efficiency.

No. of Pages : 20 No. of Claims : 11

(12) PATENT APPLICATION PUBLICATION
(19) INDIA
(22) Date of filing of Application :23/07/2013
(21) Application No.6155/CHENP/2013 A
(43) Publication Date : 05/09/2014

(54) Title of the invention : METHOD AND APPARATUS FOR DECOCTING INGREDIENTS IN A SOLVENT

(51) International classification :A23F3/16,A23F5/24,B01D11/02
(31) Priority Document No :PCT/CN2010/002189
(32) Priority Date :29/12/2010
(33) Name of priority country :China
(86) International Application No :PCT/IB2011/055804
Filing Date :20/12/2011
(87) International Publication No :WO 2012/090119
(61) Patent of Addition to Application Number :NA
Filing Date :NA
(62) Divisional to Application Number :NA
Filing Date :NA

(71)**Name of Applicant :**
1)KONINKLIJKE PHILIPS ELECTRONICS N.V.
Address of Applicant :High Tech Campus 5 NL 5656 AE Eindhoven Netherlands
(72)**Name of Inventor :**
1)WEN Tao
2)WANG Gang

(57) Abstract :
The invention relates to a method and an apparatus (1) for decocting ingredients (2) in a solvent (3). The apparatus comprises: a container (4) for containing the solvent a recipient (5) for containing the ingredients the recipient being placed inside the container a pipe (6) connecting a bottom part (7) of the container and a bottom part (8) of the recipient a pump (9) placed in series with the pipe for circulating the solvent from the bottom part of the container to the bottom part of the recipient. This apparatus allows accelerating the extraction of compounds in the ingredients.

No. of Pages : 13 No. of Claims : 6

(12) PATENT APPLICATION PUBLICATION
(19) INDIA
(22) Date of filing of Application :23/07/2013
(21) Application No.6156/CHENP/2013 A
(43) Publication Date : 05/09/2014

(54) Title of the invention : INCUBATOR ASSEMBLY

(51) International classification :A61G11/00
(31) Priority Document No :61/427552
(32) Priority Date :28/12/2010
(33) Name of priority country :U.S.A.
(86) International Application No :PCT/IB2011/055740
Filing Date :16/12/2011
(87) International Publication No :WO 2012/090109
(61) Patent of Addition to Application Number :NA
Filing Date :NA
(62) Divisional to Application Number :NA
Filing Date :NA

(71)**Name of Applicant :**
1)KONINKLIJKE PHILIPS ELECTRONICS N.V.
Address of Applicant :High Tech Campus 5 NL 5656 AE Eindhoven Netherlands
(72)**Name of Inventor :**
1)BHARADWAJ Sanjay
2)MYSORE SATHYASUNDARA Thejasvi
3)EDAVANA Roopesh

(57) Abstract :
An improved incubator assembly includes a number of movable walls and a circulation system having a fluid guide apparatus adjacent each movable wall. The fluid guide apparatuses generate a first jet of air in a direction generally parallel with a wall in the closed position and a second jet of air in a direction oblique to the wall in the closed position. Whenever one of the movable walls is moved from its closed position to its open position the jet of air that had been flowing parallel with such wall continues to flow and forms an air curtain.

No. of Pages : 24 No. of Claims : 14

(12) PATENT APPLICATION PUBLICATION
(19) INDIA
(22) Date of filing of Application :23/07/2013
(21) Application No.6157/CHENP/2013 A
(43) Publication Date : 05/09/2014

(54) Title of the invention : HIDDEN USER INTERFACE PANEL FOR PERSONAL CARE APPLIANCES AND METHOD OF MAKING SAME

(51) International classification :A61C17/22,A46B15/00
(31) Priority Document No :61/427503
(32) Priority Date :28/12/2010
(33) Name of priority country :U.S.A.
(86) International Application No :PCT/IB2011/055927
Filing Date :23/12/2011
(87) International Publication No :WO 2012/090140
(61) Patent of Addition to Application Number :NA
Filing Date :NA
(62) Divisional to Application Number :NA
Filing Date :NA

(71)**Name of Applicant :**
1)KONINKLIJKE PHILIPS ELECTRONICS N.V.
Address of Applicant :High Tech Campus 5 NL 5656 AE Eindhoven Netherlands
(72)**Name of Inventor :**
1)NAZAROFF Peter George
2)HAGEN Ronald Allan
3)JOHNSON Ahren Karl
4)LO Raymond

(57) Abstract :
A power toothbrush appliance (10) which includes a user interface assembly (24) having a hidden interface panel (26) and a method of making same the appliance including a handle (12 40) and a brushhead assembly (18) with a brush member (24) for cleaning teeth. The user interface assembly is structured so that when the appliance is in the off condition the user interface panel is blank and when the appliance is in an on condition the indicia associated with the selected operating mode of the toothbrush is illuminated and visible to the user. The interface panel includes a first paint layer of gray or black paint (42) on a translucent handle (40). The mode indicia are etched (44) to the handle in the first paint layer. A second paint layer of white paint (46) is applied over the first layer and is light transmitting so that when the toothbrush is on the selected indicia are visible to the user.

No. of Pages : 11 No. of Claims : 14

(12) PATENT APPLICATION PUBLICATION
(21) Application No.5806/CHENP/2013 A
(19) INDIA
(22) Date of filing of Application :19/07/2013
(43) Publication Date : 05/09/2014

(54) Title of the invention : METHODS SYSTEMS AND COMPUTER READABLE MEDIA FOR MODIFYING A DIAMETER SIGNALING MESSAGE DIRECTED TO A CHARGING FUNCTION NODE

(51) International classification :H04W8/20,H04W8/08,H04W4/24
(31) Priority Document No :61/426841
(32) Priority Date :23/12/2010
(33) Name of priority country :U.S.A.
(86) International Application No :PCT/US2011/067130
Filing Date :23/12/2011
(87) International Publication No :WO 2012/088497
(61) Patent of Addition to Application Number :NA
Filing Date :NA
(62) Divisional to Application Number :NA
Filing Date :NA

(71)**Name of Applicant :**
1)TEKELEC INC.
Address of Applicant :5200 Paramount Parkway Morrisville NC 27560 U.S.A.
(72)**Name of Inventor :**
1)AGARWAL Devesh
2)MARSICO Peter Joseph

(57) Abstract :
Methods systems and computer readable media for modifying a Diameter signaling message directed to a charging function node are disclosed. In one example the method comprises receiving at a Diameter routing node a Diameter signaling message that is associated with a mobile subscriber and is directed to a destination charging function node. The method further includes accessing mobile subscriber related information that is associated with the Diameter signaling message. The method also includes modifying the Diameter signaling message to include the mobile subscriber related information and routing the modified Diameter message to the destination charging function node.

No. of Pages : 29 No. of Claims : 29

(12) PATENT APPLICATION PUBLICATION
(21) Application No.6146/CHENP/2013 A
(19) INDIA
(22) Date of filing of Application :23/07/2013
(43) Publication Date : 05/09/2014

(54) Title of the invention : DEVICE AND METHOD FOR GUIDING LATCH ON

(51) International classification :A61J13/00,A61F13/15
(31) Priority Document No :PCT/CN2010/080630
(32) Priority Date :31/12/2010
(33) Name of priority country :China
(86) International Application No :PCT/IB2011/055787
Filing Date :19/12/2011
(87) International Publication No :WO 2012/090117
(61) Patent of Addition to Application Number :NA
Filing Date :NA
(62) Divisional to Application Number :NA
Filing Date :NA

(71)**Name of Applicant :**
1)KONINKLIJKE PHILIPS ELECTRONICS N.V.
Address of Applicant :High Tech Campus 5 NL 5656 AE Eindhoven Netherlands
(72)**Name of Inventor :**
1)YANG Aizhi
2)YU Renjun
3)CHEN Xin
4)DUCOS Axelle Stephanie Maud

(57) Abstract :
The invention proposes a device (1) and a corresponding method wherein the device (1) comprises: a first element (10) to be attached to a breast of a breastfeeding mother; and a first marker (11) located on the outer surface (100) of the first element (10) wherein the first marker (1 1) is used for indicating a position of a mother s breast that the baby s lip is expected to contact in order to correctly hold the mother s breast. With the device (1) attached to the mother s breast the first marker (11) indicates a position that the baby s lip is expected to contact and the breastfeeding mother can have a clear view of whether the baby correctly holds the mother s breast according to the distance between the first marker (11) and the baby s lip.

No. of Pages : 18 No. of Claims : 15

(12) PATENT APPLICATION PUBLICATION
(21) Application No.6147/CHENP/2013 A
(19) INDIA
(22) Date of filing of Application :23/07/2013
(43) Publication Date : 05/09/2014

(54) Title of the invention : NIGHTLIGHT

(51) International classification :H05B37/02
(31) Priority Document No :PCT/CN2010/002235
(32) Priority Date :31/12/2010
(33) Name of priority country :China
(86) International Application No :PCT/IB2011/055929
Filing Date :23/12/2011
(87) International Publication No :WO 2012/090141
(61) Patent of Addition to Application Number :NA
Filing Date :NA
(62) Divisional to Application Number :NA
Filing Date :NA

(71)**Name of Applicant :**
1)KONINKLIJKE PHILIPS ELECTRONICS N.V.
Address of Applicant :High Tech Campus 5 NL 5656 AE Eindhoven Netherlands
(72)**Name of Inventor :**
1)PENG Sheng
2)LOU Di

(57) Abstract :
Nightlight with motiondetector The present invention discloses a lighting system comprising: a light source configured to generate light having wavelength in the range of [550nm 700nm]; a sensor configured to detect an activity of an object; and a controller configured to control the working status of the light source based on the detection result of the sensor. The present invention further discloses a method of providing light.

No. of Pages : 19 No. of Claims : 14

(12) PATENT APPLICATION PUBLICATION
(21) Application No.5781/CHENP/2013 A
(19) INDIA
(22) Date of filing of Application :19/07/2013
(43) Publication Date : 05/09/2014

(54) Title of the invention : SYSTEM AND METHOD FOR PROVIDING MEDICAL CAREGIVER AND EQUIPMENT MANAGEMENT PATIENT CARE

(51) International classification :G06F19/00
(31) Priority Document No :61/426001
(32) Priority Date :22/12/2010
(33) Name of priority country :U.S.A.
(86) International Application No :PCT/IB2011/055732
Filing Date :16/12/2011
(87) International Publication No :WO 2012/085791
(61) Patent of Addition to Application Number :NA
Filing Date :NA
(62) Divisional to Application Number :NA
Filing Date :NA

(71)**Name of Applicant :**
1)KONINKLIJKE PHILIPS ELECTRONICS N.V.
Address of Applicant :High Tech Campus 5 NL 5656 AE Eindhoven Netherlands
2)PHILIPS INTELLECTUAL PROPERTY & STANDARDS GmbH
(72)**Name of Inventor :**
1)GROSS Brian David
2)BARGA John Louis
3)BUFE Martin
4)ZENGO Elizabeth
5)PIRRUNG Andreas
6)GEGNER Guenter
7)MEIER Wilhelm

(57) Abstract :
A medical device and caretaking management system (10) includes a plurality of medical devices(14) that transmit equipment data and patient data. A central or distributed monitoring station (12) receives the equipment data and patient data from the plurality of medical devices derives an acuity for each of the patients and assigns caregivers and equipment based on the derived acuity for display on a display device (26).

No. of Pages : 25 No. of Claims : 22

(12) PATENT APPLICATION PUBLICATION
(19) INDIA
(22) Date of filing of Application :23/07/2013
(21) Application No.5870/CHENP/2013 A
(43) Publication Date : 05/09/2014

(54) Title of the invention : THERMALLY STABLE CATALYST CARRIER COMPRISING BARIUM SULFATE

(51) International classification :B01J35/10,B01J21/04,C01B17/42
(31) Priority Document No :12/978712
(32) Priority Date :27/12/2010
(33) Name of priority country :U.S.A.
(86) International Application No :PCT/US2011/064537
Filing Date :13/12/2011
(87) International Publication No :WO 2012/091913
(61) Patent of Addition to Application Number :NA
Filing Date :NA
(62) Divisional to Application Number :NA
Filing Date :NA

(71)**Name of Applicant :**
1)BASF CORPORATION
Address of Applicant :100 Campus Drive Florham Park NJ 07932 U.S.A.
(72)**Name of Inventor :**
1)GRAMICCIONI Gary A.
2)BROWN Kenneth R.
3)DEEBA Michel
4)KOTREL Stefan
5)WASSERMANN Knut

(57) Abstract :
Provided herein is a barium sulfate containing catalyst carrier. The catalyst carrier is useful for supporting an exhaust gas purification catalyst such as a three way conversion catalyst. In an embodiment the carrier comprises BaSO/thermally stable alumina. Further provided is a process for preparing the catalyst carrier with or without precious metals comprising treating a barium oxide/alumina or barium carbonate/alumina with a stoichiometric amount of sulfuric acid (HSO) thus forming BaSO/alumina in good yield and at low cost.

No. of Pages : 43 No. of Claims : 15

(12) PATENT APPLICATION PUBLICATION
(19) INDIA
(22) Date of filing of Application :16/07/2013
(21) Application No.5647/CHENP/2013 A
(43) Publication Date : 05/09/2014

(54) Title of the invention : METHOD AND TRANSMITTER ELEMENT FOR TRANSMITTING CHANNEL INFORMATION FOR LINK ADAPTATION METHOD AND RECEIVER ELEMENT FOR RECEIVING THE CHANNEL INFORMATION

(51) International classification :H04L1/00
(31) Priority Document No :11290037.8
(32) Priority Date :21/01/2011
(33) Name of priority country :EPO
(86) International Application No :PCT/EP2011/073059
Filing Date :16/12/2011
(87) International Publication No :WO 2012/097935
(61) Patent of Addition to Application Number :NA
Filing Date :NA
(62) Divisional to Application Number :NA
Filing Date :NA

(71)**Name of Applicant :**
1)ALCATEL LUCENT
Address of Applicant :3 avenue Octave Grard F 75007 Paris France
(72)**Name of Inventor :**
1)VALENTIN Stefan
2)WILD Thorsten
3)SANTOS Andr F.D.

(57) Abstract :
The present invention refers to a method and a transmitter element (35) for transmitting channel information (CI) for link adaptation of a radio channel (33) in a wireless network (11). In order to allow for reliable and efficient transfer of the channel information (CI) and to adapt the detection probability to the importance of the CI as well as to the channel stability it is suggested that the method comprises encoding (19) the channel information (CI) using multi level coding said multi level coding (19) comprising combining multiple bit sequences (c1 c2 ... cn d) each bit sequence (c1 c2 ... cn d) corresponding to a coding level (1 ... n) of said multilevel coding (19) and assigning (37) one of said coding levels (1 ... n) to at least a part (ci1 ci2) of the channel information (CI) such that at least a part (ci1 ci2) of the channel information (CI) corresponds to the bit sequence (c1 c2 ... cn) of that coding level (1 ... n). Furthermore the present invention refers to a method and a receiver element for receiving the transmitted channel information (CI).

No. of Pages : 36 No. of Claims : 16

(12) PATENT APPLICATION PUBLICATION
(19) INDIA
(22) Date of filing of Application :18/07/2013
(21) Application No.5761/CHENP/2013 A
(43) Publication Date : 05/09/2014

(54) Title of the invention : METHOD AND DEVICE FOR COMPRESSED-DOMAIN VIDEO EDITING

(51) International classification :G11B27/036
(31) Priority Document No :10/798,824
(32) Priority Date :10/03/2004
(33) Name of priority country :U.S.A.
(86) International Application No :PCT/IB2005/000545
Filing Date :03/03/2005
(87) International Publication No : NA
(61) Patent of Addition to Application Number :NA
Filing Date :NA
(62) Divisional to Application Number :3265/CHENP/2006
Filed on :03/03/2005

(71)**Name of Applicant :**
1)CORE WIRELESS LICENSING S.A.R.L.
Address of Applicant :16, Avenue Pasteur L-2310, Luxembourg
(72)**Name of Inventor :**
1)ISLAM Asad
2)CHEBIL Fehmi

(57) Abstract :
A method and device for editing a media file comprising input video frames. The editing device comprises a frame analyzer to determine whether the input video frames have the frame characteristics suitable for compressed domain editing or spatial domain editing. For those frames suitable for compressed domain editing, the frame analyzer provides frame data to a compressed domain processor so that video frame data can be modified in the compressed domain. For those frames only suitable for spatial domain editing, the frame analyzer provides frame data to a decoder and then to a spatial domain processor for frame data modification. The modified data at different domains are combined and converted to file format by a file format composer. Moreover, a file format parser is used to separate audio data from video data so that audio data can also be modified, if so desired.

No. of Pages : 34 No. of Claims : 38

(12) PATENT APPLICATION PUBLICATION
(21) Application No.890/CHE/2012 A
(19) INDIA
(22) Date of filing of Application :09/03/2012
(43) Publication Date : 05/09/2014

(54) Title of the invention : A NOVEL PROCESS FOR THE PREPARATION OF (R)-5-[2-[(5,6-DIETHYL-2, 3,-DIHYDRO-1H-INDEN-2-YL) AMINO]-1-HYDROXYETHYL]-8-HYDROXY QUINOLIN-2(1H)-ONE

(51) International classification :B29C
(31) Priority Document No :NA
(32) Priority Date :NA
(33) Name of priority country :NA
(86) International Application No :NA
Filing Date :NA
(87) International Publication No : NA
(61) Patent of Addition to Application Number :NA
Filing Date :NA
(62) Divisional to Application Number :NA
Filing Date :NA

(71)**Name of Applicant :**
1)DR. DAVULURI RAMAMOHAN RAO
Address of Applicant :204, II FLOOR, MERIDIAN PLAZA, 6-3-853/1, AMEERPET, HYDERABAD 500 016 Andhra Pradesh India
(72)**Name of Inventor :**
1)PONNAIAH RAVI
2)NEELA PRAVEEN KUMAR
3)BATHANI GURUSWAMY
4)KALLEPALLY SUDEER
5)MUTYALA SWATHA

(57) Abstract :
The present invention relates to a novel process for preparation of Indacaterol Malate by employing novel intermediates of the formula IIIA and IXA.

No. of Pages : 34 No. of Claims : 38

(12) PATENT APPLICATION PUBLICATION
(19) INDIA
(22) Date of filing of Application :23/07/2013
(21) Application No.6150/CHENP/2013 A
(43) Publication Date : 05/09/2014

(54) Title of the invention : POLICY BASED OLN LIGHT MANAGEMENT SYSTEM

(51) International classification :H05B37/02
(31) Priority Document No :61/428258
(32) Priority Date :30/12/2010
(33) Name of priority country :U.S.A.
(86) International Application No :PCT/IB2011/055764
Filing Date :19/12/2011
(87) International Publication No :WO 2012/090113
(61) Patent of Addition to Application Number :NA
Filing Date :NA
(62) Divisional to Application Number :NA
Filing Date :NA

(71)**Name of Applicant :**
1)KONINKLIJKE PHILIPS ELECTRONICS N.V.
Address of Applicant :High Tech Campus 5 NL 5656 AE Eindhoven Netherlands
(72)**Name of Inventor :**
1)CHALLAPALI Kiran Srinivas
2)CAVALCANTI Dave Alberto Tavares
3)WANG Jianfeng
4)ZHAI Hongqiang

(57) Abstract :
A policy based OLN (outdoor lighting network) light management system including a central control apparatus (40); lighting unit control apparatus (50); a communication system (60) operably connecting the central control apparatus (40) and the lighting unit control apparatus (50); and a repository (70) in communication with the central control apparatus (40) the repository (70) being operable to store an OLN policy. The central control apparatus (40) is operable to: receive a policy; check the policy for consistency against the OLN policy; determine attributes and configuration commands for each of the lighting unit control apparatus (50) in accordance with the policy when the policy is consistent with the OLN policy; and communicate the attributes and the configuration commands for each of the lighting unit control apparatus (50) to a corresponding one of the lighting unit control apparatus (50).

No. of Pages : 51 No. of Claims : 34

(12) PATENT APPLICATION PUBLICATION
(21) Application No.887/CHE/2013 A
(19) INDIA
(22) Date of filing of Application :28/02/2013
(43) Publication Date : 05/09/2014

(54) Title of the invention : SAMPLE COOLING DEVICE AND SAMPLING APPARATUS

(51) International classification	:B60R	(71)**Name of Applicant :**
(31) Priority Document No	:2012-055290	**1)SHIMADZU CORPORATION** Address of Applicant :1, NISHINOKYO-KUWABARACHO, NAKAGYO-KU, KYOTO-SHI, KYOTO 6048511 Japan
(32) Priority Date	:13/03/2012	(72)**Name of Inventor :**
(33) Name of priority country	:Japan	**1)YASUNAGA, KENICHI**
(86) International Application No	:NA	
Filing Date	:NA	
(87) International Publication No	: NA	
(61) Patent of Addition to Application Number	:NA	
Filing Date	:NA	
(62) Divisional to Application Number	:NA	
Filing Date	:NA	

(57) Abstract :
A sample cooling device for cooling a sample container held in a heat conductive rack comprises a cooler; a heat conductive member, on which the rack is placed, to be cooled in contact with the cooler; and a heat conductive water absorbing member disposed at least partly in an opposite region defined between the heat conductive member and the rack in contact with both of the heat conductive member and the rack. The water absorbing member has a structure for absorbing water by a capillary force.

No. of Pages : 23 No. of Claims : 11

(12) PATENT APPLICATION PUBLICATION
(19) INDIA
(22) Date of filing of Application :31/01/2013
(21) Application No.773/CHENP/2013 A
(43) Publication Date : 05/09/2014

(54) Title of the invention : DUAL MODE AGENT DISCHARGE SYSTEM WITH MULTIPLE AGENT DISCHARGE CAPABILITY

(51) International classification :A62C31/02
(31) Priority Document No :61/370998
(32) Priority Date :05/08/2010
(33) Name of priority country :U.S.A.
(86) International Application No :PCT/US2011/046558
Filing Date :04/08/2011
(87) International Publication No :WO 2012/018990
(61) Patent of Addition to Application Number :NA
Filing Date :NA
(62) Divisional to Application Number :NA
Filing Date :NA

(71)**Name of Applicant :**
1)VICTAULIC COMPANY
Address of Applicant :4901 Kesslersville Road Easton PA 18040 U.S.A.
(72)**Name of Inventor :**
1)REILLY William J.
2)THAU Lawrence W.

(57) Abstract :
An emitter system capable of discharging an atomized liquid gas stream or a liquid stream which atomizes into a spray has a source of pressurized gas and one or more sources of pressurized liquids. Flow of gas and liquid to an emitter is controlled by valves and the emitter can be used to discharge either the atomized liquid gas stream or the liquid stream. The emitter system may be used for fire suppression.

No. of Pages : 41 No. of Claims : 43

(12) PATENT APPLICATION PUBLICATION
(19) INDIA
(22) Date of filing of Application :19/07/2013
(21) Application No.5847/CHENP/2013 A
(43) Publication Date : 05/09/2014

(54) Title of the invention : WALL FILTER FOR ULTRASONIC MITRAL REGURGITATION ANALYSIS

(51) International classification :A61B8/06,G01S7/52,G01S15/02
(31) Priority Document No :61/426669
(32) Priority Date :23/12/2010
(33) Name of priority country :U.S.A.
(86) International Application No :PCT/IB2011/055704
Filing Date :15/12/2011
(87) International Publication No :WO 2012/085779
(61) Patent of Addition to Application Number :NA
Filing Date :NA
(62) Divisional to Application Number :NA
Filing Date :NA

(71)**Name of Applicant :**
1)KONINKLIJKE PHILIPS ELECTRONICS N.V.
Address of Applicant :High Tech Campus 5 NL 5656 AE Eindhoven Netherlands
(72)**Name of Inventor :**
1)WEI Qifeng
2)THIELE Karl E.

(57) Abstract :
An ultrasonic diagnostic imaging system is described which quantifies regurgitant flow through a mitral valve. Echo signals received by an ultrasound probe (10) are used to produce an image of a regurgitant flow region and are processed by a wall filter having a response characteristic which peaks at an intermediate sampling rate between zero and the Nyquist limits. This response characteristic is thus highly sensitive to lower flow rates which may be anticipated in a flow velocity field proximal a regurgitant orifice. Echo signals passed by the wall filter are Doppler processed and used to quantify the flow through the regurgitant orifice.

No. of Pages : 21 No. of Claims : 12

(12) PATENT APPLICATION PUBLICATION
(19) INDIA
(22) Date of filing of Application :19/07/2013
(21) Application No.5816/CHENP/2013 A
(43) Publication Date : 05/09/2014

(54) Title of the invention : LIGHTING DEVICE AND METHOD FOR MANUFACTURING A LIGHTING DEVICE

(51) International classification :F21K99/00,F21Y101/02,F21W121/00
(31) Priority Document No :10196396.5
(32) Priority Date :22/12/2010
(33) Name of priority country :EPO
(86) International Application No :PCT/IB2011/055565
Filing Date :09/12/2011
(87) International Publication No :WO 2012/085736
(61) Patent of Addition to Application Number :NA
Filing Date :NA
(62) Divisional to Application Number :NA
Filing Date :NA

(71)**Name of Applicant :**
1)KONINKLIJKE PHILIPS ELECTRONICS N.V.
Address of Applicant :High Tech Campus 5 NL 5656 AE Eindhoven Netherlands
(72)**Name of Inventor :**
1)KWISTHOUT Cornelis Wilhelmus

(57) Abstract :
The invention relates to a lighting device and a method of manufacturing such a lighting device. The lighting device (1) comprises a first light emitting element (101) being optically coupled to a light guide (110) having an out coupling surface (111) for illumination via the light guide. Further the lighting device comprises a second light emitting element (102) dedicated for direct illumination from the lighting device. The invention is advantageous in that the lighting device provides both a decorative look and a functional illumination and is still energy efficient since the light emitted from the second light emitting element is directly emitted from the light emitting element without unnecessary energy loss.

No. of Pages : 17 No. of Claims : 16

(12) PATENT APPLICATION PUBLICATION
(19) INDIA
(22) Date of filing of Application :31/01/2013
(21) Application No.777/CHENP/2013 A
(43) Publication Date : 05/09/2014

(54) Title of the invention : PROCESS FOR PRODUCING AMMONIA SYNTHESIS GAS

(51) International classification :C01B3/02,C01B3/38,C01B3/48
(31) Priority Document No :10168495.9
(32) Priority Date :06/07/2010
(33) Name of priority country :EPO
(86) International Application No :PCT/EP2011/057729
Filing Date :12/05/2011
(87) International Publication No :WO 2012/004032
(61) Patent of Addition to Application Number :NA
Filing Date :NA
(62) Divisional to Application Number :NA
Filing Date :NA

(71)**Name of Applicant :**
1)AMMONIA CASALE SA
Address of Applicant :Via Giulio Pocobelli 6 CH 6900 Lugano Besso Switzerland
(72)**Name of Inventor :**
1)FILIPPI Ermanno
2)BARATTO Francesco
3)PANZA Sergio
4)OSTUNI Raffaele

(57) Abstract :
A process for producing ammonia synthesis gas from a hydrocarbon containing feedstock with steps of primary reforming secondary reforming with an oxidant stream and further treatment of the synthesis gas including shift removal of carbon dioxide and methanation wherein the synthesis gas delivered by secondary reforming is subject to a medium temperature shift (MTS) at a temperature between 200 and 350 °C and primary reforming is operated with a steam to carbon ratio lower than 2. A corresponding method for revamping an ammonia plant is disclosed where an existing HTS reactor is modified to operate at medium temperature or replaced with a new MTS reactor and the steam to carbon ratio in the primary reformer is lowered to a value in the range 1 5 2 thus reducing inert steam in the flow rate trough the equipments of the front end.

No. of Pages : 15 No. of Claims : 10

(12) PATENT APPLICATION PUBLICATION
(19) INDIA
(22) Date of filing of Application :08/07/2013
(21) Application No.5389/CHENP/2013 A
(43) Publication Date : 05/09/2014

(54) Title of the invention : APPARATUS AND METHOD FOR MANUFACTURING REDUCED IRON

(51) International classification :C21B13/08
(31) Priority Document No :1020100137251
(32) Priority Date :28/12/2010
(33) Name of priority country :Republic of Korea
(86) International Application No :PCT/KR2011/007888
Filing Date :21/10/2011
(87) International Publication No :WO 2012/091265
(61) Patent of Addition to Application Number :NA
Filing Date :NA
(62) Divisional to Application Number :NA
Filing Date :NA

(71)**Name of Applicant :**
1)POSCO
Address of Applicant :1 Goedong dong Nam ku Pohang shi Kyungsangbuk do 790 300 Republic of Korea
(72)**Name of Inventor :**
1)JUNG Jonghwun
2)JEONG Sun Kwang
3)LEE Seungmoon
4)KIM Ki Hyun
5)KIM Sung Man
6)JANG Dong Seok

(57) Abstract :
Provided are an apparatus and method for manufacturing reduced iron. The method for manufacturing reduced iron includes degrading pulverized iron ore and reducing the pulverized iron ore by means of at least one rotary flow reduction device using reduction gas. Thus ultra pulverized iron ore may be reduced using the reduction gas containing abundant hydrogen in a rotary fluidized bed reduction reactor to produce reduced iron thereby reducing carbon dioxide and also reducing the ultra pulverized iron ore including low quality iron which is difficult to reduce.

No. of Pages : 30 No. of Claims : 12

(12) PATENT APPLICATION PUBLICATION
(21) Application No.5504/CHENP/2013 A
(19) INDIA
(22) Date of filing of Application :11/07/2013
(43) Publication Date : 05/09/2014

(54) Title of the invention : METHODS COMPOSITIONS SYSTEMS APPARATUSES AND KITS FOR NUCLEIC ACID AMPLIFICATION

(51) International classification :C12Q1/68
(31) Priority Document No :61/424599
(32) Priority Date :17/12/2010
(33) Name of priority country :U.S.A.
(86) International Application No :PCT/US2011/065535
Filing Date :16/12/2011
(87) International Publication No :WO 2012/083189
(61) Patent of Addition to Application Number :NA
Filing Date :NA
(62) Divisional to Application Number :NA
Filing Date :NA

(71)**Name of Applicant :**
1)LIFE TECHNOLOGIES CORPORATION
Address of Applicant :5791 Van Allen Way Carlsband California 92008 U.S.A.
(72)**Name of Inventor :**
1)LI Bin
2)LAO Kai Qin
3)ONEIL Jennifer
4)KUNKEL Jennifer
5)HALEY Kellie
6)KASINSKAS Rachel
7)MA Zhaochun
8)BRZOSKA Pius

(57) Abstract :
Novel methods of generating a localized population of immobilized clonal amplicons on a support are provided.

No. of Pages : 84 No. of Claims : 103

(12) PATENT APPLICATION PUBLICATION
(19) INDIA
(22) Date of filing of Application :11/07/2013
(21) Application No.5505/CHENP/2013 A
(43) Publication Date : 05/09/2014

(54) Title of the invention : MULTICORE COLLIMATOR

(51) International classification :G02B27/30
(31) Priority Document No :61/425685
(32) Priority Date :21/12/2010
(33) Name of priority country :U.S.A.
(86) International Application No :PCT/US2011/066677
Filing Date :21/12/2011
(87) International Publication No :WO 2012/088361
(61) Patent of Addition to Application Number :NA
Filing Date :NA
(62) Divisional to Application Number :NA
Filing Date :NA

(71)**Name of Applicant :**
1)OFS FITEL LLC
Address of Applicant :2000 Northeast Expressway Norcross GA 30071 U.S.A.
(72)**Name of Inventor :**
1)ABEDIN Kazi S.
2)TAUNAY Thierry F.
3)YAN Man F.

(57) Abstract :
A multicore collimator collimates light signals transmitted by respective cores of a multicore fiber. An array of gradient index lens includes a plurality of individual gradient index lenses corresponding to respective cores of the multicore fiber. The plurality of gradient index lenses extends through a lens array body between an input end and an output end thereof and has a lens to lens spacing that is larger than the core to core spacing of the multicore fiber. A taper at the input end of the array of gradient index lenses provides a tapered transition between the core to core spacing of the multicore fiber and the lens to lens spacing of the array of gradient index lenses. The array of gradient index lenses is configured to collimate the light signals outputs from the coupler and to provide the collimated light signals as an output at the output end of the array of gradient index lenses.

No. of Pages : 63 No. of Claims : 24

(12) PATENT APPLICATION PUBLICATION
(21) Application No.6883/CHENP/2012 A
(19) INDIA
(22) Date of filing of Application :06/08/2012
(43) Publication Date : 05/09/2014

(54) Title of the invention : WATER ABSORBING MATERIAL

(51) International classification :A01K 1/015
(31) Priority Document No :NA
(32) Priority Date :NA
(33) Name of priority country :NA
(86) International Application No :PCT/JP2011/054534
Filing Date :28/02/2011
(87) International Publication No :WO/2012/117504
(61) Patent of Addition to Application Number :NA
Filing Date :NA
(62) Divisional to Application Number :NA
Filing Date :NA

(71)**Name of Applicant :**
1)DAIKI CO., LTD
Address of Applicant :201, MASUTORAIFU-NISHISHIMBASHI, 6-10, NISHISHIMBASHI 3-CHOME, MINATO-KU, TOKYO 1050003, Japan
(72)**Name of Inventor :**
1)ITO, Hiroshi

(57) Abstract :
Provided is a water absorbent material comprising a granular core part and a coating layer part that coats the granular core part, said water absorbent material showing distinct and uniform color development and, therefore, enabling clear discrimination of check up results after use. The water absorbent material is characterized in that: the coating layer part comprises 90-96 wt% of a base material and 4-10 wt% of an excretion-checking material; said excretion-checking material comprises a porous adsorbent, which is provided with micropores and has an adsorption rate of 20 wt% or greater, and an excretion-checking indicator adsorbed within the micropores of the porous adsorbent; and the excretion-checking indicator is added in an amount that is greater than 0.1 wt% but not greater than 1.0 wt% relative to the total amount of the coating layer part.

No. of Pages : 23 No. of Claims : 2

(12) PATENT APPLICATION PUBLICATION
(21) Application No.5868/CHENP/2013 A
(19) INDIA
(22) Date of filing of Application :23/07/2013
(43) Publication Date : 05/09/2014

(54) Title of the invention : ARRANGEMENT FOR STEERING A SHIP AND FOR SUPPLYING POWER TO ITS PROPULSION SYSTEM

(51) International classification :B63H5/10,B63H23/24
(31) Priority Document No :11152721.4
(32) Priority Date :31/01/2011
(33) Name of priority country :EPO
(86) International Application No :PCT/EP2012/051561
Filing Date :31/01/2012
(87) International Publication No :WO 2012/104303
(61) Patent of Addition to Application Number :NA
Filing Date :NA
(62) Divisional to Application Number :NA
Filing Date :NA

(71)**Name of Applicant :**
1)ABB OY
Address of Applicant :Strmbergintie 1 FI 00380 Helsinki Finland
(72)**Name of Inventor :**
1)KOKKILA Kimmo

(57) Abstract :
Arrangement for steering and supplying propulsion power to a contra rotating propellers (CRP) propulsion system in a marine vessel which arrangement comprises a first propeller (44) driven by a rotating power unit (40) and a second propeller (48) driven by an AC motor (50) whereby the second propeller (48) is rotated in the opposite direction as the first propeller (44) and an AC generator (42) coupled to mechanical output shaft of the power unit (40) and driven by a rotating power unit whereby the AC generator (42) is electrically connected to the AC motor (50). According the arrangement the AC motor (50) and the AC generator (42) have the same electrical frequency another electrical power source (60 61 62) is electrically connectable to the AC motor (50) parallel to the AC generator (42) the shaft (47) of the second propeller is mounted rotatable in a support structure (16 24) which is attached to a hull of the marine vessel (2) and a rudder (10) which is supported in a manner allowing pivotal movement of the rudder (10) relative to the support structure (16 24).

No. of Pages : 10 No. of Claims : 3

(12) PATENT APPLICATION PUBLICATION
(21) Application No.5194/CHENP/2013 A
(19) INDIA
(22) Date of filing of Application :02/07/2013
(43) Publication Date : 05/09/2014

(54) Title of the invention : THERAPEUTIC APPARATUS COMPRISING A RADIOTHERAPY APPARATUS A MECHANICAL POSITIONING SYSTEM AND A MAGNETIC RESONANCE IMAGING SYSTEM

(51) International classification :A61N5/10
(31) Priority Document No :10194683.8
(32) Priority Date :13/12/2010
(33) Name of priority country :EPO
(86) International Application No :PCT/IB2011/055432
Filing Date :02/12/2011
(87) International Publication No :WO 2012/080894
(61) Patent of Addition to Application Number :NA
Filing Date :NA
(62) Divisional to Application Number :NA
Filing Date :NA

(71)**Name of Applicant :**
1)KONINKLIJKE PHILIPS ELECTRONICS N.V.
Address of Applicant :High Tech Campus 5 NL 5656 AE Eindhoven Netherlands
2)PHILIPS INTELLECTUAL PROPERTY & STANDARDS GMBH
(72)**Name of Inventor :**
1)UHLEMANN Falk

(57) Abstract :
A therapeutic apparatus (400 500) comprising a radiotherapy apparatus (402) a mechanical positioning system and a magnetic resonance imaging system (404). The radiotherapy apparatus comprises a radiotherapy source (408). The radiotherapy apparatus is adapted for rotating the radiotherapy source at least partially around a subject support. The therapeutic apparatus further comprises a memory containing machine executable instructions (468 470 472 474 476). Execution of the instructions causes a processor to repeatedly: acquire (100) the magnetic resonance data using the magnetic resonance imaging system; reconstruct (102) a magnetic resonance image (460) from the magnetic resonance data; register (104) a location (462) of the target zone in the magnetic resonance image; generate (106) radiotherapy control signals (464) in accordance with the location of the registered target zone; generate (108) mechanical positioning control signals (466) in accordance with the registered target zone and the radiotherapy control signals; and send (110) the radiotherapy control signals to the radiotherapy system and send (110) the mechanical positioning control signals to the mechanical positioning system.

No. of Pages : 38 No. of Claims : 15

(12) PATENT APPLICATION PUBLICATION
(19) INDIA
(22) Date of filing of Application :19/07/2013
(21) Application No.5770/CHENP/2013 A
(43) Publication Date : 05/09/2014

(54) Title of the invention : ACTIVE VALVE FOR VENTILATORS

(51) International classification :A61M16/20,A62B9/02,F16K31/08
(31) Priority Document No :61/425515
(32) Priority Date :21/12/2010
(33) Name of priority country :U.S.A.
(86) International Application No :PCT/IB2011/055574
Filing Date :09/12/2011
(87) International Publication No :WO 2012/085740
(61) Patent of Addition to Application Number :NA
Filing Date :NA
(62) Divisional to Application Number :NA
Filing Date :NA

(71)**Name of Applicant :**
1)KONINKLIJKE PHILIPS ELECTRONICS N.V.
Address of Applicant :High Tech Campus 5 NL 5656 AE Eindhoven Netherlands
(72)**Name of Inventor :**
1)ARCILLA Mabini
2)AHMAD Samir
3)KELLY Eamonn

(57) Abstract :
A valve (100) for controlling pressure in a ventilation system is disclosed. The valve comprises an electromagnet (105 106) a shaft (107) connected to the electromagnet and a diaphragm (110) connected to the shaft wherein the electromagnet applies force to the diaphragm based on an input. The ventilation system comprises a ventilator (200) connected to a patient circuit (204) the valve (100) controlling pressure in the ventilation system and a controller (206) connected to the valve and configured to provide the input to the valve.

No. of Pages : 19 No. of Claims : 19

(12) PATENT APPLICATION PUBLICATION
(21) Application No.793/CHE/2013 A
(19) INDIA
(22) Date of filing of Application :22/02/2013
(43) Publication Date : 05/09/2014

(54) Title of the invention : PROCESSING CONTAINER

(51) International classification	:b60j	(71)**Name of Applicant :**
(31) Priority Document No	:2012-046515	**1)SHOWA DENKO GAS PRODUCTS CO., LTD.** Address of Applicant :1310, OMIYA-CHO, SAIWAI-KU, KAWASAKI, KANAGAWA 2120014 Japan
(32) Priority Date	:02/03/2012	
(33) Name of priority country	:Japan	(72)**Name of Inventor :**
(86) International Application No	:NA	**1)INAGAKI, MASAYUKI**
Filing Date	:NA	
(87) International Publication No	: NA	
(61) Patent of Addition to Application Number	:NA	
Filing Date	:NA	
(62) Divisional to Application Number	:NA	
Filing Date	:NA	

(57) Abstract :
In the processing container, which consists of a case unit formed by the opening that is filled with coolant or is projected with blasting media, and an opening/closing door that opens and closes this case unit opening, the processing container comprises a peripheral plate that is fixed to the periphery of the case unit opening, an inner door that is mounted in an elastically supported condition so that the inside surface of the opening/closing door covers the case unit opening and the surrounding part hermetically seals with the peripheral plate, and packing which is positioned between the peripheral plate of this inner door surrounding part and the inside surface of the opening/closing door that is capable of forming a hermetic seal.

No. of Pages : 31 No. of Claims : 3

(12) PATENT APPLICATION PUBLICATION
(19) INDIA
(22) Date of filing of Application :17/07/2013
(21) Application No.5719/CHENP/2013 A
(43) Publication Date : 05/09/2014

(54) Title of the invention : ENGINE EXHAUST GAS ADDITIVE STORAGE SYSTEM

(51) International classification :F01N3/20,F01N13/16
(31) Priority Document No :10196840.2
(32) Priority Date :23/12/2010
(33) Name of priority country :EPO
(86) International Application No :PCT/EP2011/073546
Filing Date :21/12/2011
(87) International Publication No :WO 2012/085053
(61) Patent of Addition to Application Number :NA
Filing Date :NA
(62) Divisional to Application Number :NA
Filing Date :NA

(71)**Name of Applicant :**
1)INERGY AUTOMOTIVE SYSTEMS RESEARCH (SOCI‰T‰ ANONYME)
Address of Applicant :Rue de Ransbeek 310 B 1120 Bruxelles Belgium
(72)**Name of Inventor :**
1)VAN SCHAFTINGEN Jules Joseph
2)OP DE BEECK Joel
3)CHOI Jae Sik

(57) Abstract :
System for storing an internal combustion engine exhaust gas liquid additive and comprising a tank for storing the additive said tank being made as two halve shells which are manufactured as two separate parts which are assembled at least one of said shells comprising an active component fixed inside of it.

No. of Pages : 16 No. of Claims : 14

(12) PATENT APPLICATION PUBLICATION
(19) INDIA
(22) Date of filing of Application :19/07/2013
(21) Application No.5787/CHENP/2013 A
(43) Publication Date : 05/09/2014

(54) Title of the invention : ELECTRODE AND ELECTRICAL STORAGE DEVICE FOR LEAD ACID SYSTEM

(51) International classification :H01M4/96,H01M4/583,H01M4/14
(31) Priority Document No :2010284040
(32) Priority Date :21/12/2010
(33) Name of priority country :Japan
(86) International Application No :PCT/AU2011/001647
Filing Date :21/12/2011
(87) International Publication No :WO 2012/083358
(61) Patent of Addition to Application Number :NA
Filing Date :NA
(62) Divisional to Application Number :NA
Filing Date :NA

(71)**Name of Applicant :**
1)COMMONWEALTH SCIENTIFIC AND INDUSTRIAL RESEARCH ORGANISATION
Address of Applicant :Limestone Avenue Campbell Australian Capital Territory 2612 Australia
2)THE FURUKAWA BATTERY CO. LTD.
(72)**Name of Inventor :**
1)FURUKAWA Jun
2)MOMMA Daisuke
3)LAM Trieu Lan
4)LOUEY Rosalie
5)HAIGH Peter Nigel

(57) Abstract :
The present invention generally relates to electrodes for use in lead acid battery systems batteries and electrical storage devices thereof and methods for producing the electrodes batteries and electrical storage devices. In particular the electrodes comprise active battery material for a lead acid storage battery wherein the surface of the electrode is provided with a coating layer comprising a carbon mixture containing composite carbon particles wherein each of the composite carbon particles comprises a particle of a first capacitor carbon material combined with particles of a second electrically conductive carbon material. The electrical storage devices and batteries comprising the electrodes are for example particularly suitable for use in hybrid electric vehicles requiring a repeated rapid charge/discharge operation in the PSOC idling stop system vehicles and in industrial applications such as wind power generation and photovoltaic power generation.

No. of Pages : 43 No. of Claims : 25

(12) PATENT APPLICATION PUBLICATION
(21) Application No.989/CHE/2013 A
(19) INDIA
(22) Date of filing of Application :07/03/2013
(43) Publication Date : 05/09/2014

(54) Title of the invention : SOLVENT DELIVERY DEVICE AND LIQUID CHROMATOGRAPH

(51) International classification	:B65G	(71)**Name of Applicant :**
(31) Priority Document No	:2012-051123	**1)SHIMADZU CORPORATION**
(32) Priority Date	:08/03/2012	Address of Applicant :1, NISHINOKYO-KUWABARACHO, NAKAGYO-KU, KYOTO-SHI, KYOTO 6048511 Japan
(33) Name of priority country	:Japan	(72)**Name of Inventor :**
(86) International Application No	:NA	**1)OGAWA, KEISUKE**
Filing Date	:NA	**2)MAEDA, YASUYUKI**
(87) International Publication No	: NA	
(61) Patent of Addition to Application Number	:NA	
Filing Date	:NA	
(62) Divisional to Application Number	:NA	
Filing Date	:NA	

(57) Abstract :
A solvent delivery device includes a solvent delivery pump and a flow path switching valve. The flow path switching valve is connected to downstream ends of mobile phase sending flow paths and the solvent delivery pump is to be connected to one of the mobile phase sending flow paths by switching the flow path switching valve. At least one of the mobile phase sending flow paths includes a buffer solution sending flow path, and the buffer solution sending flow path includes a buffer solution storage section, a cleaning solution storage section, and a mobile phasa switching valve for switching connection of the flow path switching valve to one of the storage sections.

No. of Pages : 20 No. of Claims : 3

(12) PATENT APPLICATION PUBLICATION
(19) INDIA
(22) Date of filing of Application :26/06/2013
(21) Application No.4985/CHENP/2013 A
(43) Publication Date : 05/09/2014

(54) Title of the invention : SYSTEMS AND METHODS FOR JOINTLY OPTIMIZING WAN AND LAN NETWORK COMMUNICATIONS

(51) International classification :H04L12/24,H04L12/28
(31) Priority Document No :NA
(32) Priority Date :NA
(33) Name of priority country :NA
(86) International Application No :PCT/US2011/021003
Filing Date :12/01/2011
(87) International Publication No :WO 2012/096661
(61) Patent of Addition to Application Number :NA
Filing Date :NA
(62) Divisional to Application Number :NA
Filing Date :NA

(71)**Name of Applicant :**
1)ADAPTIVE SPECTRUM AND SIGNAL ALIGNMENT INC.
Address of Applicant :333 Twin Dolhin Drive Redwood City CA 94065 U.S.A.
(72)**Name of Inventor :**
1)CHOW Peter
2)RHEE Wonjong
3)TEHRANI Ardavan Maleki
4)GOLDBURG Marc

(57) Abstract :
Described are systems and methods for jointly optimizing Wide Area Network (WAN) and Local Area Network (LAN) network communications. In one embodiment a management device communicatively interfaced with a WAN and a LAN includes a collection module to collect LAN information from the LAN and WAN information from the WAN; an analysis module to jointly analyze the collected WAN information and the collected LAN information to identify an operational condition; and an implementation module to initiate a management event responsive to the operational condition being identified. In one embodiment the management event includes generating and transmitting a diagnostics report responsive to a fault being identified. The management device may further generate and execute instructions to remedy the diagnosed fault.

No. of Pages : 64 No. of Claims : 34

(12) PATENT APPLICATION PUBLICATION
(19) INDIA
(22) Date of filing of Application :10/07/2013
(21) Application No.5447/CHENP/2013 A
(43) Publication Date : 05/09/2014

(54) Title of the invention : SELECTIVE GLYCOSIDASE INHIBITORS AND USES THEREOF

(51) International classification :C07H9/06,A61K31/7056,C07D513/04
(31) Priority Document No:61/426773
(32) Priority Date :23/12/2010
(33) Name of priority country :U.S.A.
(86) International Application No :PCT/CA2011/001397
Filing Date :21/12/2011
(87) International Publication No :WO 2012/083435
(61) Patent of Addition to Application Number :NA
Filing Date :NA
(62) Divisional to Application Number :NA
Filing Date :NA

(71)**Name of Applicant :**
1)ALECTOS THERAPEUTICS INC.
Address of Applicant :8999 Nelson Way Burnaby British Columbia V5A 4B5 Canada
2)MERCK SHARP & DOHME CORP.
(72)**Name of Inventor :**
1)KAUL Ramesh
2)MCEACHERN Ernest J.
3)MU Changwei
4)SELNICK Harold G.
5)VOCADLO David J.
6)WANG Yaode
7)WEI Zhongyong
8)ZHOU Yuanxi
9)ZHU Yongbao

(57) Abstract :
The invention provides compounds with enhanced permeability for selectively inhibiting glycosidases prodrugs of the compounds and pharmaceutical compositions including the compounds or prodrugs of the compounds. The invention also provides methods of treating diseases and disorders related to deficiency or overexpression of O GlcNAcase accumulation or deficiency of O GlcNAc.

No. of Pages : 118 No. of Claims : 27

(12) PATENT APPLICATION PUBLICATION
(19) INDIA
(22) Date of filing of Application :16/07/2013
(21) Application No.5673/CHENP/2013 A
(43) Publication Date : 05/09/2014

(54) Title of the invention : METHODS AND SYSTEMS FOR IDENTIFYING PATIENTS WITH MILD COGNITIVE IMPAIRMENT AT RISK OF CONVERTING TO ALZHEIMER S

(51) International classification :G06F19/00
(31) Priority Document No :61/424829
(32) Priority Date :20/12/2010
(33) Name of priority country :U.S.A.
(86) International Application No :PCT/IB2011/055584
Filing Date :09/12/2011
(87) International Publication No :WO 2012/085743
(61) Patent of Addition to Application Number :NA
Filing Date :NA
(62) Divisional to Application Number :NA
Filing Date :NA

(71)**Name of Applicant :**
1)KONINKLIJKE PHILIPS ELECTRONICS N.V.
Address of Applicant :High Tech Campus 5 NL 5656 AE Eindhoven Netherlands
(72)**Name of Inventor :**
1)SCHAFFER James David
2)CHIOFOLO Caitlyn Marie

(57) Abstract :
Methods and systems for selecting a cohort group or a patient at risk from a population of patients with mild cognitive impairment. The methods include using a computer configured to perform the steps: receiving normalized learning data from a portion of the population of patients; tuning a set of decision trees on the normalized learning data; receiving patient data from one or more patients of the population wherein the patient data is independent from the learning data; classifying the patient data with the tuned set of decision trees to obtain patient threshold values; and displaying the patient threshold values.

No. of Pages : 57 No. of Claims : 31

(12) PATENT APPLICATION PUBLICATION
(21) Application No.5674/CHENP/2013 A
(19) INDIA
(22) Date of filing of Application :16/07/2013
(43) Publication Date : 05/09/2014

(54) Title of the invention : A TEAT FOR A FEEDING BOTTLE

(51) International classification :A61J11/00
(31) Priority Document No :10195860.1
(32) Priority Date :20/12/2010
(33) Name of priority country :EPO
(86) International Application No :PCT/IB2011/055538
Filing Date :08/12/2011
(87) International Publication No :WO 2012/085727
(61) Patent of Addition to Application Number :NA
Filing Date :NA
(62) Divisional to Application Number :NA
Filing Date :NA

(71)**Name of Applicant :**
1)KONINKLIJKE PHILIPS ELECTRONICS N.V.
Address of Applicant :High Tech Campus 5 NL 5656 AE Eindhoven Netherlands
(72)**Name of Inventor :**
1)KNIGHT Simon Christopher
2)GEIJZENDORFFER Carolien Willemijn
3)VAN DEN BOSCH Michael
4)VAN DER KOOI Johannes Tseard

(57) Abstract :
The present invention relates to a teat for a feeding bottle. The teat has an outer wall (18) and a plurality of recesses (25) formed in an outer wall (18). The plurality of recesses (25) extend in a circumferential arrangement around a longitudinal axis of the teat. The present invention also relates to a teat with an outer wall (5 46 66). The outer wall has a region of reduced wall thickness (7 47 67 84) extending in a circumferential band around a longitudinal axis of the teat.

No. of Pages : 21 No. of Claims : 15

(12) PATENT APPLICATION PUBLICATION
(19) INDIA
(22) Date of filing of Application :18/07/2013
(21) Application No.5791/CHENP/2013 A
(43) Publication Date : 05/09/2014

(54) Title of the invention : MODIFIED RELEASE BENZIMIDAZOLE FORMULATIONS

(51) International classification :A61K9/20,A61K9/16,A61K47/38
(31) Priority Document No :4013/CHE/2010
(32) Priority Date :29/12/2010
(33) Name of priority country :India
(86) International Application No :PCT/US2011/067868
Filing Date :29/12/2011
(87) International Publication No :WO 2012/092486
(61) Patent of Addition to Application Number :NA
Filing Date :NA
(62) Divisional to Application Number :NA
Filing Date :NA

(71)**Name of Applicant :**
1)DR. REDDYS LABORATORIES LTD.
Address of Applicant :8 2 337 Road No. 3 Banjara Hills Andhra Pradesh Hyderabad 500 034 India
2)DR. REDDYS LABORATORIES INC.
(72)**Name of Inventor :**
1)MEKA Lingam
2)REDDY Srinivasa Almareddy
3)SINHA Vagisha
4)JOGIA Hitesh
5)ARUTLA Srinivas
6)PILLAI Raviraj
7)GAWANDE Rahul Sudhakar
8)VURE Prasad
9)VOBALABOINA Venkateswarlu

(57) Abstract :
A pharmaceutical formulation providing more than one release of a benzimidazole drug. In embodiments drug containing particles are coated with at least one polymer having solubility at pH values about 5 to about 7.5 and other drug containing particles are coated with at least one polymer having solubility at pH values about 5 to about 6.

No. of Pages : 58 No. of Claims : 15

(12) PATENT APPLICATION PUBLICATION
(21) Application No.5288/CHENP/2013 A
(19) INDIA
(22) Date of filing of Application :04/07/2013
(43) Publication Date : 05/09/2014

(54) Title of the invention : HYDRAULIC SYSTEM WITH RETURN PRESSURE CONTROL

(51) International classification :F15B21/08
(31) Priority Document No :61/424147
(32) Priority Date :17/12/2010
(33) Name of priority country :U.S.A.
(86) International Application No :PCT/US2011/029152
Filing Date :21/03/2011
(87) International Publication No :WO 2012/082176
(61) Patent of Addition to Application Number :NA
Filing Date :NA
(62) Divisional to Application Number :NA
Filing Date :NA

(71)**Name of Applicant :**
1)PARKER HANNIFIN CORPORATION
Address of Applicant :6035 Parkland Boulevard Cleveland OH 44124 U.S.A.
(72)**Name of Inventor :**
1)LOWMAN Roger
2)FRANZONI Germano
3)HARSIA Jarmo

(57) Abstract :
A hydraulic system (10) includes an electronically controlled counter pressure valve (60) that enables backpressure in a return line (36) of the system to be varied by a control unit (64). The system allows active control of the pressure in the return line to produce different return pressures for different situations. A higher return line pressure may be set to improve make up or recirculating flow through an anti cavitation valve (50). This may improve controllability of functions that benefit from backpressure such as lowering loads (12). The control unit that controls the counter pressure valve may take into account any of a wide variety of possible inputs when setting the counter pressure valve.

No. of Pages : 24 No. of Claims : 20

(12) PATENT APPLICATION PUBLICATION
(19) INDIA
(22) Date of filing of Application :23/01/2013
(21) Application No.540/CHENP/2013 A
(43) Publication Date : 05/09/2014

(54) Title of the invention : PIPETTE TIP PIPETTE SYSTEM AND METHOD FOR PERFORMING ANALYSIS WITH THE PIPETTE TIP AND SYSTEM

(51) International classification :B01L3/02
(31) Priority Document No :61/344332
(32) Priority Date :30/06/2010
(33) Name of priority country :U.S.A.
(86) International Application No :PCT/EP2011/061058
Filing Date :30/06/2011
(87) International Publication No :WO 2012/001127
(61) Patent of Addition to Application Number :NA
Filing Date :NA
(62) Divisional to Application Number :NA
Filing Date :NA

(71)**Name of Applicant :**
1)CSEM CENTRE SUISSE DELECTRONIQUE ET DE MICROTECHNIQUE SA RECHERCHE ET DEVELOPPEMENT
Address of Applicant :Rue Jaquet Droz 1 CH 2002 Neuchtel Switzerland
(72)**Name of Inventor :**
1)FOLLONIER Stphane
2)FAN Linsey
3)INDERMUHLE Pierre

(57) Abstract :
The present invention relates to a pipette tip (100 200 201 300) comprising a tip body (110) having an inner surface and an outer surface (112). The inner surface (111) defines an inner cavity (120 320) which has an upper end and a lower end. The upper end has an upper opening (131); and the lower end has a lower opening (141). At least a part of the inner surface (111) is provided with capturing agents (151) of at least one type forming at least one capturing agent region (150) on the at least one inner surface. The at least one capturing agent region (150) is capable of selectively binding target substances (152) of at least one type comprised in a sample to form at least agent target conjugates (155) the arrangement of which define at least one agent target region (156).

No. of Pages : 40 No. of Claims : 20

(12) PATENT APPLICATION PUBLICATION
(21) Application No.6142/CHENP/2012 A
(19) INDIA
(22) Date of filing of Application :12/07/2012
(43) Publication Date : 05/09/2014

(54) Title of the invention : FLOATING BODY CONNECTION TYPE FLAP GATE

(51) International classification :E02B7/40,E02B7/50
(31) Priority Document No :2010-015823
(32) Priority Date :27/01/2010
(33) Name of priority country :Japan
(86) International Application No :PCT/JP2010/067463
Filing Date :05/10/2010
(87) International Publication No :WO 2011/092897 A1
(61) Patent of Addition to Application Number :NA
Filing Date :NA
(62) Divisional to Application Number :NA
Filing Date :NA

(71)**Name of Applicant :**
1)HITACHI ZOSEN CORPORATION
Address of Applicant :7 89 Nanko Kita 1 chome Suminoe ku Osaka shi Osaka 5598559 Japan
(72)**Name of Inventor :**
1)NAKAYASU Kyouiti
2)MORII Toshiaki
3)KIMURA Yuitirou
4)NIIZATO Hideyuki

(57) Abstract :
[OBJECT] To prevent a door body from shaking significantly when it rises. [MEANS] A floating body flap gate 1 is provided which is disposed on a roadway surface s in an opening d; and causes a door body 2 to rise to block the opening when water w is trying to flow in from the opening d by using a water pressure of the water w which is trying to flow in and a buoyancy of the door body 2. The door body 2 is formed with three door body blocks 2a-2c, which are separated in the vertical direction. These door body blocks 2a-2c which are separated in the vertical direction, are connected by rotation mechanisms 3a-3c for rotation at a specified angle within a vertical plane in a direction in which the water w is trying to flow in from the opening d. [ADVANTAGEOUS EFFECTS] The door body is not subject to significant shaking, regardless of the water level at which the water tries to flow in from the opening.

No. of Pages : 25 No. of Claims : 10

(12) PATENT APPLICATION PUBLICATION
(19) INDIA
(22) Date of filing of Application :12/08/2010
(21) Application No.899/KOL/2010 A
(43) Publication Date : 05/09/2014

(54) Title of the invention : A SELF-DIAGNOSTIC SYSTEM TO PROVIDE INDICATION AND PROTECTION FOR REFUELING OF BI-FUEL COMPLAINT VEHICLE

(51) International classification :F02D19/06
(31) Priority Document No :NA
(32) Priority Date :NA
(33) Name of priority country :NA
(86) International Application No :NA
Filing Date :NA
(87) International Publication No : NA
(61) Patent of Addition to Application Number :NA
Filing Date :NA
(62) Divisional to Application Number :NA
Filing Date :NA

(71)**Name of Applicant :**
1)MARUTI SUZUKI INDIA LIMITED
Address of Applicant :REGIONAL OFFICE, L&T CHAMBERS, 4TH FLOOR, 16 CAMAC STREET, KOLKATA-700017, WITH THE HEAD OFFICE AT PLOT NO. - 1, NELSON MANDELA ROAD, VASANT KUNJ, NEW DELHI - 110070 India
(72)**Name of Inventor :**
1)MR. NISHIT JAIN
2)MR. HARISH CHANDRA
3)MS. VARSHA CHAUDHARY
4)MR. CHINAM NETAJI PATRO
5)MR. TAPAN SAHOO
6)MR. YASUKI NAKADA
7)MR. NORITHIRO NODA

(57) Abstract :
The invention relates to a self-diagnostic system to provide indication and protection for refuelling of alternative fuels driven vehicle, the system comprising an electronic control unit incorporated with a logic rule; a fuel lid having a fuel-lid sWitch; a plurality of engine operation sensor; a CNGfuel level/pressure sensor, an ignition switch; and at least a communication line connected between the ECUand a display device, the system is operable to receive from the fuel-lid switch signals representing close or open status of the fuel lid by the ECU;collect data relating to ignition switch status from the engine sensors by the ECU; disable the ignition switch to re-start the engine if fuel-lid signals displays an open status; and enable the ignition switch to restart the engine when the display status exhibits a close status.

No. of Pages : 14 No. of Claims : 2

(12) PATENT APPLICATION PUBLICATION
(19) INDIA
(22) Date of filing of Application :26/02/2013

(21) Application No.223/KOL/2013 A
(43) Publication Date : 05/09/2014

(54) Title of the invention : SEALED EXTERNAL GALVANIZATION OF TUBES.

(51) International classification	:H01J 61/00	
(31) Priority Document No	:NA	
(32) Priority Date	:NA	
(33) Name of priority country	:NA	
(86) International Application No	:NA	
Filing Date	:NA	
(87) International Publication No	: NA	
(61) Patent of Addition to Application Number	:NA	
Filing Date	:NA	
(62) Divisional to Application Number	:NA	
Filing Date	:NA	

(71)**Name of Applicant :**
1)TATA STEEL LIMITED
Address of Applicant :RESEARCH AND DEVELOPMENT AND SCIENTIFIC SERVICES DIVISION, JAMSHEDPUR 831 001, Jharkhand India
(72)**Name of Inventor :**
1)SOURAV DAS
2)ARINDAM DAS
3)ANUBHAV ARORA
4)ANKUR KUMAR JAIN
5)NIKHIL BAHL

(57) Abstract :
1. A process setup of sealed external coating of steel tubes (4) comprising: A horizontal table (1) with a longitudinal slot (2); a pneumatic cylinder 1 with a piston head, which is mounted on said table (1) and aligned with said slot (2); said piston head of cylinder 1 is connected to a fixture 1 carrying a vertical pneumatic cylinder 2 such that the said piston of cylinder 1 moves linearly along the longitudinal slot (2); said cylinder 2 carries a fixture 2 which moves along with piston of cylinder 2, said fixture 2 carries a frame (3) with separate fixed and movable arms which are hollow bent in an L shape with end caps (5) at lower end for handling tubes for coating and are aligned such that they are coaxial with steel tube (4) to be coated; said movable arm is connected at its top to a pneumatic cylinder 3 such that movement of piston of cylinder 3 moves the movable arm of said frame in the plane of Fixture 2; said frame (3) is mounted on said fixture 2 such that the steel tube (4) between said end caps (5) make cHi angle of around 15 degrees with the horizontal; and a station 1, a station 2 and a station 3 as positions of said fixture 1 when said cylinder 1 is retracted completely, extended halfway and extended completely respectively.

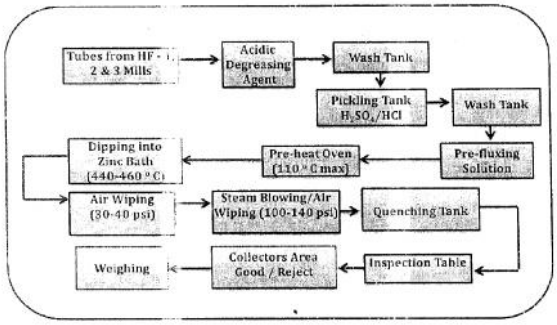

No. of Pages : 16 No. of Claims : 6

(12) PATENT APPLICATION PUBLICATION
(19) INDIA
(22) Date of filing of Application :29/08/2000

(21) Application No.497/CAL/2000 A
(43) Publication Date : 05/09/2014

(54) Title of the invention : DOUBLE BOWED COMPRESSOR AIRFOIL

(51) International classification	:F04D 29/38	
(31) Priority Document No	:09/455,826	
(32) Priority Date	:06/12/1999	
(33) Name of priority country	:U.S.A.	
(86) International Application No	:NA	
Filing Date	:NA	
(87) International Publication No	: NA	
(61) Patent of Addition to Application Number	:NA	
Filing Date	:NA	
(62) Divisional to Application Number	:NA	
Filing Date	:NA	

(71)**Name of Applicant :**
1)GENERAL ELECTRIC COMPANY
Address of Applicant :ONE RIVER ROAD, SCHENECTADU, NEW YORK U.S.A.
(72)**Name of Inventor :**
1)LIU HSIN-TUAN
2)DICKMAN ROBERT D
3)KRABACHER KENNETH WILLIAM
4)STEINMETZ GREGORY TODD
5)BEACHER BRENT FRANKLIN
6)DOLORESCO BRYAN KEITH

(57) Abstract :
A compressor airfoil (12) includes pressure and suction sides (18,20) extending from root (22) to tip (24) and between leading and trailing edges (26,28). Transverse sections have respective chords and camber lines. Centers of gravity (34) of the sections are aligned along a double bowed stacking axis for improving performance.

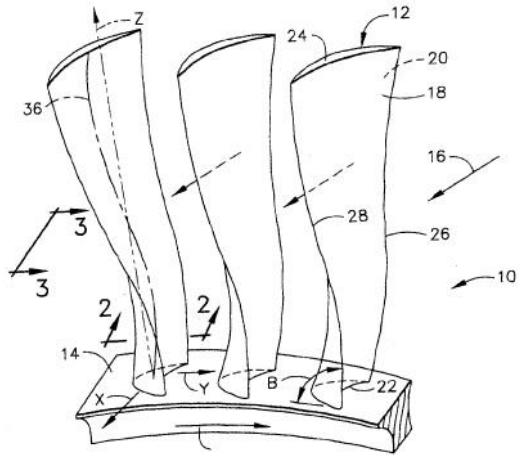

No. of Pages : 18 No. of Claims : 14

(12) PATENT APPLICATION PUBLICATION
(19) INDIA
(22) Date of filing of Application :17/11/2000

(21) Application No.646/CAL/2000 A
(43) Publication Date : 05/09/2014

(54) Title of the invention : NOVEL NUCLEOSIDES

(51) International classification	:C07H 19/00	(71)**Name of Applicant :**
(31) Priority Document No	:NA	**1)ICN PHARMACEUTICALS, INC**
(32) Priority Date	:NA	Address of Applicant :3300 HYLAND AVENUE, COSTA MESA CALIFORNIA 92626 U.S.A.
(33) Name of priority country	:NA	(72)**Name of Inventor :**
(86) International Application No	:NA	**1)ROBERT TAM**
Filing Date	:NA	**2)DEVRON AVERETT**
(87) International Publication No	: NA	**3)GUANGYI WANG**
(61) Patent of Addition to Application Number	:NA	**4)KANDA RAMASAMY**
Filing Date	:NA	
(62) Divisional to Application Number	:NA	
Filing Date	:NA	

(57) Abstract :
The invention discloses a method of recording control information on a recording medium, comprising: generating respective control information units associated with at least first and second recording layers, the respective control information units including first information identifying a type of the corresponding control information unit and a write strategy (WS) information dependent on the type of the corresponding control information unit, wherein the first information indicates whether the corresponding control information unit can be used for CLV (constant linear velocity) mode or CAV (constant angular velocity) mode; and recording the respective control information units on a specific area of at least one of first and second recording layers. An apparatus for recording control information on a recording medium is also disclosed.

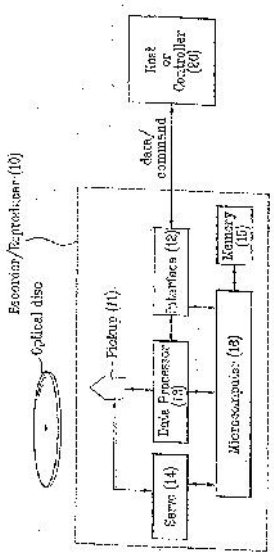

No. of Pages : 37 No. of Claims : 29

(12) PATENT APPLICATION PUBLICATION
(21) Application No.243/KOL/2013 A
(19) INDIA
(22) Date of filing of Application :01/03/2013
(43) Publication Date : 05/09/2014

(54) Title of the invention : TO PROPOSE A TENSILE SPECIMEN FOR IN-SITU TENSILE TESTING IN A SCANNING ELECTRON MICROSCOPE

(51) International classification :G01N1/28
(31) Priority Document No :NA
(32) Priority Date :NA
(33) Name of priority country :NA
(86) International Application No :NA
Filing Date :NA
(87) International Publication No : NA
(61) Patent of Addition to Application Number :NA
Filing Date :NA
(62) Divisional to Application Number :NA
Filing Date :NA

(71)**Name of Applicant :**
1)TATA STEEL LIMITED
Address of Applicant :RESEARCH AND DEVELOPMENT AND SCIENTIFIC SERVICES DIVISION, JAMSHEDPUR-831001, Jharkhand India
(72)**Name of Inventor :**
1)MR. SURAJIT KUMAR PAUL
2)MR. MONIDEEPA MUKHERJEE
3)MR. ARIJIT LODH

(57) Abstract :
The invention relates to a notched miniature tensile specimen, comprising: at least two grip sections at the two ends; of the specimen; a reduced section positioned centrally in between the two grip sections, such that the transition fillet in between the grip sections and the reduced sections has a constant curvature, characterized by comprising : two U-shaped notches are provided at the two sides of the reduced section.

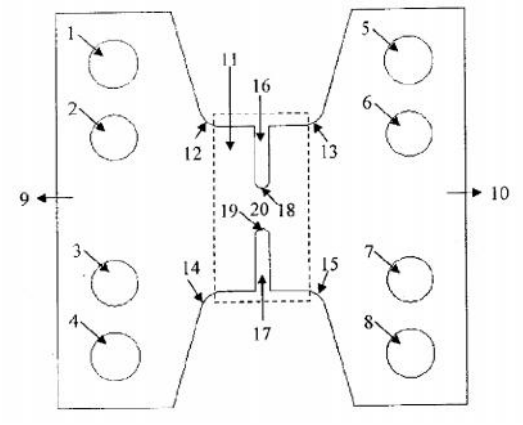

No. of Pages : 11 No. of Claims : 7

PUBLICATION U/R 84[3] IN RESPECT OF APPLICATION FOR RESTORATION OF PATENTS (KOLKATA)

Notice is hereby given that any person interested in opposing the following applications for Restoration of Patents under Section 60 of the Patent Act, 1970, may at any time within 2 months from the date of publication of this notice, give notice to the Controller of Patents at the appropriate office on the prescribed Form 14 under rule 85 of the Patents Rules, 2003.

Patent No.	Applicants	Title	Date of Cessation	Appropriate Office
247996	Conxpert Holding GMBH.	Method of monitoring date exchange between application systems and monitoring system therefor.	25/11/2013	KOLKATA

Publication Under Section 43(2) in Respect of the Grant

Following Patents have been granted and any person interested in opposing these patents under Section 25(2) may at any time within one year from the date of this issue, give notice to the Controller of Patents at the appropriate office, on the prescribed form-7 along with written statement and evidence, if any.

Serial Number	Patent Number	Application Number	Date of Application	Date of Priority	Title of Invention	Name of Patentee	Date of Publication of Abstract u/s 11(A)	Appropriate Office
1	262583	6716/DELNP/2006	20/05/2005	24/05/2004	Antibiotic compound and process of preparation thereof	1. MERCK SHARP & DOHME CORP. 2. MERCK SHARP & DOHME de ESPANA, S. A.	31/08/2007	DELHI
2	262586	3074/DELNP/2007	11/10/2005	14/10/2004	ARTICLE OF APPAREL HAVING A FLOCKED MATERIAL	NIKE INTERNATIONAL LTD.	31/08/2007	DELHI
3	262587	924/DELNP/2008	12/07/2006	04/08/2005	A COMPOUND OF FORMULA (1) AND PROCESS OF PREPARING AQUEOUS SOLUTIONS THEREOF	CLARIANT FINANCE (BVI) LIMITED,	27/06/2008	DELHI
4	262591	40/DEL/2008	04/01/2008	17/01/2007	A METHOD FOR ALIGNING AN IMAGER FOR LOCATION OF AN IMAGE	3D SYSTEMS INC.	01/08/2008	DELHI
5	262593	9919/DELNP/2007	13/06/2006	16/06/2005	A COMPOSITION COMPRISING A QUARTERNARY AMMONIUM SALT	THE LUBRIZOL CORPORATION	18/01/2008	DELHI
6	262595	3263/DELNP/2007	08/11/2005	15/11/2004	POLYMER COMPOSITION	LUBRIZOL ADVANCED MATERIALS, INC.	31/08/2007	DELHI
7	262596	2626/DELNP/2008	23/10/2006	25/10/2005	NOVEL TRICYCLIC AMINE COMPOUNDS WHICH HAVE MICROBIOCIDAL ACTIVITY	SYNGENTA PARTICIPATIONS AG.	04/07/2008	DELHI
8	262597	1031/DEL/2004	04/06/2004	05/06/2003	A PROCESS TO RECOVER A METAL CATALYST FROM A MOTHER LIQUOR	GRUPO PETROTEMEX, S.A. DE C.V.	23/06/2006	DELHI
9	262598	2053/DEL/2009	30/09/2009 16:12:36		NEGATIVE FRAGRANCE FORMULATIONS	DIRECTOR GENERAL, DEFENCE RESEARCH & DEVELOPMENT ORGANISATION	08/04/2011	DELHI
10	262600	2401/DEL/2007	14/11/2007	15/11/2006	A CHILD SEAT ANCHOR APPARATUS	SUZUKI MOTOR CORPORATION	06/06/2008	DELHI
11	262602	7114/DELNP/2006	28/04/2005	28/04/2004	AN ISOLATED PEPTIDE USEFUL FOR DIAGNOSING, PREVENTING OR TREATING COELIAC DISEASE	BTG INTERNATIONAL LIMITED	24/08/2007	DELHI
12	262605	1629/DEL/2005	23/06/2005	06/02/2005	METHOD FOR PRODUCING SPUNLACE NON-WOVEN CLOTH	LI, JIANAQUAN	31/08/2007	DELHI

13	262612	4965/DELNP/2005	28/04/2004	28/04/2003	HEMORRHOID TREATMENT DEVICE	TAKASHIMA JIRO	17/08/2007	DELHI
14	262613	2071/DEL/2005	03/08/2005	03/08/2004	A PROCESSING AGENT FOR SYNTHETIC FIBERS AND A METHOD OF PROCESSING SYNTHETIC FIBERS	TAKEMOTO YUSHI KABUSHIKI KAISHA	31/07/2009	DELHI
15	262614	4934/DELNP/2008	04/12/2006	09/12/2005	ANTIBODY MOLECULES HAVING SPECIFICITY FOR HUMAN IL-6	UCB PHARMA S.A.	15/08/2008	DELHI
16	262615	3326/DEL/2005	05/05/2004	14/05/2003	APPARATUS FOR DECELERATING A HOT ROLLED PRODUCT	SIEMENS INDUSTRY,INC	05/10/2007	DELHI
17	262620	569/DELNP/2008	04/07/2006	02/08/2005	METHOD AND COMMUNICATION SYSTEM FOR SELECTING A TRANSMISSION MODE FOR TRANSMITTING USEFUL DATA	SIEMENS ENTERPRISE COMMUNICATIONS GMBH & CO. KG	11/07/2008	DELHI
18	262624	1400/DELNP/2004	22/11/2002	05/12/2001	A METHOD FOR PREPARAING A PATHOGEN INACTIVATION TREATMENT-READY BLOOD PRODUCT	FENWAL INC.,	16/03/2007	DELHI
19	262626	1143/DEL/2009	04/06/2009	03/07/2008	A COMPOSITION COMPRISING ONE OR MORE ACRYLIC OLIGOMER	ROHM AND HAAS COMPANY	23/04/2010	DELHI
20	262627	5843/DELNP/2008	26/12/2006	26/12/2005	IMMUNOGLOBULIN G (IgG) CONCENTRATE DEPLETED OF ANTI-A AND ANTI-B ANTIBODIES AND OF POLYREACTIVE IgGs	LABORATOIRE FRANCAIS DU FRACTIONNEMENT ET DES BIOTECHNOLOGIES SOCIETE ANONYME	26/09/2008	DELHI
21	262628	206/DEL/2006	25/01/2006		A BRAKE BINDING ELIMINATOR UNIT FOR AC/DC EMU COACHES	ESCORTS LIMITED	24/08/2007	DELHI
22	262629	1918/DEL/2007	11/09/2007	28/09/2006	A STRUCTURE FOR MOUNTING AN ELECTRIC MOTOR IN A VEHICLE	MITSUBISHI JIDOSHA KOGYO KABUSHIKI KAISHA	12/09/2008	DELHI
23	262632	4957/DELNP/2007	16/12/2005	16/12/2004	PROCESS FOR THE PRODUCTION OF A GLASS TYPE SUSTRATE HAVING ANTIMICROBIAL PROPERTIES	AGC GLASS EUROPE	17/08/2007	DELHI
24	262634	4004/DELNP/2007	15/12/2005	17/12/2004	HERBICIDAL COMPOSITION COMPRISING PROSULFOCARB AND METOLACHLOR FOR SELCTIVE CONTROL OF UNDESIRED VEGETATION	SYNGENTA PARTICIPATIONS AG.,	31/08/2007	DELHI
25	262638	8526/DELNP/2007	01/05/2006	29/04/2005	METHOD FOR AMPLIFICATION OF DNA USING PARTIALLY RANDOM PRIMERS	SYNTHETIC GENOMICS, INC.	04/07/2008	DELHI

26	262644	1082/DEL/2007	18/05/2007 15:07:19	19/05/2006	SURGICAL SYSTEM HAVING MANIFOLDS WITH INTEGRAL PNEUMATIC ACCUMULATORS	ALCONL INC.	23/11/2007	DELHI
27	262648	488/DEL/2008	29/02/2008		DEVICE FOR EARLY DETECTION OF INFECTION WITH DENGUE FLAVIVIRUS IN HUMAN SERUM, PLASMA OR WHOLE BLOOD	MAHAJAN ; LALIT	20/03/2009	DELHI
28	262649	542/DEL/2007	14/03/2007		A PROCESS FOR DETECTION OF ANALYTE USING HEPARIN AND APPLYING ELECTRIC FIELD	DIRECTOR GENERAL, DEFENCE RESEARCH & DEVELOPMENT ORGANIZATION (DRDO),INDIAN INSTITUTE OF SCIENCE (IISC.)	23/04/2010	DELHI
29	262650	10040/DELNP/2007	30/06/2006	30/06/2005	PRODUCTION OF RECOMBINANT PRODUCTS USING CAPILLARY MEMBRANES	SYNEXA LIFE SCIENCES (PROPRIETARY) LIMITED	20/06/2008	DELHI
30	262657	1319/DELNP/2007	26/07/2005	26/07/2004	5-SUBSTITUTED-2-PHENYLAMINO BENZAMIDE AS MEK INHIBITOR	CHUGAI SEIYAKU KABUSHIKI KAISHA	03/08/2007	DELHI
31	262659	8082/DELNP/2007	31/03/2006	08/04/2005	SEPARATION OF CONTAMINANTS FROM STREPTOCOCCUS PNEUMONIAE POLYSACCHARIDE BY PH MANIPULATION	WYETH	04/07/2008	DELHI
32	262675	1075/DELNP/2007	01/08/2005	30/07/2004	AN ANATONICAL IMAGING SYSTEM	NEUROLOGICA CORP.	03/08/2007	DELHI
33	262676	5633/DELNP/2009	14/03/2008	15/03/2007	MG-BASED ALLOY PLATED STEEL MATERIAL	NIPPON STEEL & SUMITO METAL CORPORATION	07/05/2010	DELHI

Publication Under Section 43(2) in Respect of the Grant

Following Patents have been granted and any person interested in opposing these patents under Section 25(2) may at any time within one year from the date of this issue, give notice to the Controller of Patents at the appropriate office, on the prescribed form-7 along with written statement and evidence, if any.

Serial Number	Patent Number	Application Number	Date of Application	Date of Priority	Title of Invention	Name of Patentee	Date of Publication of Abstract u/s 11(A)	Appropriate Office
1	262589	1686/MUM/2006	12/10/2006		CARRIAGE SYSTEM FOR AN AUTOMATIC RUBBER COT ARBOUR GRINDING OR BUFFING MACHINE.	MEVADIA, JITENDRA ISHWARBHAI,MISTRY, NARESH AMRUTLAL	23/11/2007	MUMBAI
2	262592	2287/MUMNP/2008	21/05/2007	30/06/2006	A METHOD AND A DEVICE FOR CONTROLLING A ROLL GAP	ABB AB	23/01/2009	MUMBAI
3	262670	1306/MUMNP/2009	18/12/2007	21/12/2006	PROCESS FOR PREPARING AROMATIC POLYCARBOXYLIC ACID BY LIQUID PHASE OXIDATION	SAUDI BASIC INDUSTRIES CORPORATION	12/02/2010	MUMBAI
4	262671	1402/MUM/2011	05/05/2011 14:50:44		NOVEL ORAL PHARMACEUTICAL COMPOSITION FOR THE TREATMENT OF RESPIRATORY ALLERGIC DISEASES.	ZOTA HEALTH CARE LTD	08/07/2011	MUMBAI
5	262677	1524/MUMNP/2008	09/01/2007	18/01/2006	DOWNLINK BEAM FORMING METHOD AND DEVICE OF TIME DIVISION CODE DIVISION MULTIPLE ACCESS SYSTEM	SHANGHAI ULTIMATE POWER COMMUNICATIONS TECHNOLOGY CO., LTD.	26/09/2008	MUMBAI

Publication Under Section 43(2) in Respect of the Grant

Following Patents have been granted and any person interested in opposing these patents under Section 25(2) may at any time within one year from the date of this issue, give notice to the Controller of Patents at the appropriate office, on the prescribed form-7 along with written statement and evidence, if any.

Serial Number	Patent Number	Application Number	Date of Application	Date of Priority	Title of Invention	Name of Patentee	Date of Publication of Abstract u/s 11(A)	Appropriate Office
1	262585	3814/CHENP/2007	02/03/2006	03/03/2005	SUBSTITUTED PYRIDINE DERIVATIVES	H. LUNDBECK A/S	21/12/2007	CHENNAI
2	262636	454/CHENP/2009	23/07/2007	25/07/2006	COMPOSITION THAT CAN UNDERGO CATIONIC POLYMERIZATION WHEN IRRADIATED	VENCOREX FRANCE	05/06/2009	CHENNAI
3	262639	1616/CHENP/2007	20/10/2005	22/10/2004	METHOD FOR DISSOLVING PPTA IN SULFURIC ACID USING A TWIN SCREW EXTRUDER	TEIJIN ARAMID B. V.	31/08/2007	CHENNAI
4	262642	7145/CHENP/2008	01/06/2006	01/06/2006	SLOPE PLANTING STRUCTURE	CHANG, Yushun	21/08/2009	CHENNAI
5	262643	313/CHENP/2007	21/07/2005	24/07/2004	KNITTED FABRIC THAT IS ELECTRICALLY CONDUCTIVE IN A BIAXIAL MANNER	medi GmbH & Co. KG.	24/08/2007	CHENNAI
6	262645	2442/CHENP/2006	13/10/2004	13/10/2004	LAMINATED MICROFLUIDIC STRUCTURES AND METHOD FOR MAKING	RHEONIX, INC.	08/06/2007	CHENNAI
7	262654	2390/CHE/2008	29/09/2008 16:04:37		HIGHLY CONDUCTING RESIN-COATED METAL SHEET	KABUSHIKI KAISHA KOBE SEIKO SHO (KOBE STEEL, LTD.)	02/04/2010	CHENNAI
8	262658	1356/CHE/2008	03/06/2008 16:04:05	06/06/2007	METHOD AND DEVICE FOR CONTROLLING OPERATION OF A ROVING MACHINE	KABUSHIKI KAISHA TOYOTA JIDOSHOKKI	21/08/2009	CHENNAI
9	262661	3911/CHENP/2006	24/03/2005	25/03/2004	METHOD OF PRODUCING LOWER ALCOHOLS FROM GLYCEROL	THE CURATORS OF THE UNIVERSITY OF MISSOURI,RENEWABLE ALTERNATIVES LLC	27/07/2007	CHENNAI
10	262665	549/CHE/2008	04/03/2008 15:59:33	07/03/2007	INSULATOR STRUCTURE	HONDA MOTOR CO., LTD.	11/09/2009	CHENNAI
11	262667	3062/CHENP/2007	02/01/2006	11/01/2005	PROCESS FOR THE POST-MODIFICATION OF HOMO AND COPOLYMERS PREPARED BY CONTROLLED FREE RADICAL POLYMERIZATION PROCESSES	CIBA HOLDING INC.	07/09/2007	CHENNAI

12	262679	950/CHE/2008	17/04/2008 16:48:02	18/04/2007	DISPLAY STAND HAVING INVISIBLE SECURING FLAPS	L'HOTEL, FRANCOIS	21/08/2009	CHENNAI
13	262680	1474/CHENP/2008	11/10/2002	12/10/2001	A CEPHALOSPORIN COMPOUND OF FORMULA II	THERAVANCE, INC	28/11/2008	CHENNAI
14	262681	808/CHE/2008	01/04/2008 16:53:31	02/04/2007	RESISTANT FUEL CELL COMPONENTS	GM GLOBAL TECHNOLOGY OPERATIONS, INC.	11/09/2009	CHENNAI
15	262682	3714/CHENP/2007	25/01/2006	25/01/2005	A MAJOR HISTOCOMPATIBILITY COMPLEX (MHC) MOLECULE COMPRISING A PEPTIDE ANTIGEN	HET NEDERLANDS KANKER INSTITUUT ,STICHTING SANQUIN BLOEDVOORZIENIN G	16/11/2007	CHENNAI

Publication Under Section 43(2) in Respect of the Grant

Following Patents have been granted and any person interested in opposing these patents under Section 25(2) may at any time within one year from the date of this issue, give notice to the Controller of Patents at the appropriate office, on the prescribed form-7 along with written statement and evidence, if any.

Serial Number	Patent Number	Application Number	Date of Application	Date of Priority	Title of Invention	Name of Patentee	Date of Publication of Abstract u/s 11(A)	Appropriate Office
1	262584	403/KOLNP/2008	21/08/2006	23/08/2005	POLYESTER-POLYURETHANE HYBRID RESIN MOLDING COMPOSITIONS COMPRISING POLYURETHANE WITH UNITS DERIVED FROM ALIPHATIC ISOCYANATES	COOK COMPOSITES AND POLYMERS COMPANY	17/04/2009	KOLKATA
2	262588	1340/KOLNP/2004	28/02/2003	01/03/2002	A PROCESS FOR OBTAINING AN IMPROVED FUSED AND CAST COMPOSITION WITH HIGH ZIRCONIA	SAINT-GOBAIN CENTRE DE RECHERCHES ET D'ETUDES EUROPEEN	05/05/2006	KOLKATA
3	262590	626/KOL/2004	04/10/2004		SECURE TRANSFER SYSTEM (STS) FOR EXCHANGE OF INFORMATION, DATA, & MAIL, BETWEEN PRIVATE NETWORKS AND PUBLIC NETWORKS LIKE THE INTERNET	PANKAJ KUMAR MITRA	10/11/2006	KOLKATA
4	262594	1313/KOL/2007	21/09/2007 15:30:41		MULTIPLE FUNCTIONALITY SIMULATION APPARATUS FOR ELECTROSATATIC PRECIPITATOR CONTROLLER	BHARAT HEAVY ELECTRICALS LIMITED	10/04/2009	KOLKATA
5	262599	94/KOL/2008	11/01/2008	11/01/2007	AN APPARATUS FOR LOCATING AN ARRHYTHMOGENIC PATHWAY IN A LOCATION OF A LIVING SUBJECT	BIOSENSE WEBSTER, INC.	17/04/2009	KOLKATA
6	262601	575/KOL/2007	12/04/2007		A METHOD FOR REALIZATION OF MULTIFUNCTION NUMERICAL LINE PROTECTION RELAY ADOPTING A REAL-TIME OPERATING SYSTEM AND A SINGLE PROCESSOR	BHARAT HEAVY ELECTRICALS LIMITED	17/10/2008	KOLKATA

7	262603	1225/KOLNP/2006	28/10/2004	03/11/2003	INTRAVENOUS CARDIAC PACING SYSTEM WITH WIRELESS POWER SUPPLY	KENERGY, INC.	27/04/2007	KOLKATA
8	262604	1829/KOLNP/2007	20/09/2005	17/11/2004	METHOD FOR FORWARDING A CALL IN A DIRECT-COMMUNICATION COMMUNICATION NETWORK, AND COMMUNICATION COMPONENT FOR DIRECT-COMMUNICATION COMMUNICATION NETWORK	SIEMENS ENTERPRISE COMMUNICATIONS GMBH & CO.KG.	10/08/2007	KOLKATA
9	262606	4477/KOLNP/2007	10/08/2006	11/08/2005	A METHOD OF PERFORMING PERIODIC POSITIONING IN A MOBILE COMMUNICATION NETWORK/SYSTEM	LG ELECTRONICS INC.	18/07/2008	KOLKATA
10	262607	2244/KOLNP/2006	16/08/2005	19/08/2004	A METHOD OF CONTROLLING A USER EQUIPMENT CAPABLE OF RECEIVING A POINT-TO-MULTIPOINT SERVICE IN A WIRELESS COMMUNICATION SYSTEM	LG ELECTRONICS INC.	25/05/2007	KOLKATA
11	262608	2184/KOLNP/2006	01/02/2005	02/02/2004	HIGH IMPEDANCE FAULT DETECTION.	ABB INC	18/05/2007	KOLKATA
12	262609	2281/KOLNP/2008	06/12/2006	13/12/2005	CONTROL METHOD FOR COOLIING AN INDUSTRIAL PLANT	SIEMENS AKTIENGESELLSCHAFT	16/01/2009	KOLKATA
13	262610	2009/KOLNP/2007	22/12/2005	23/12/2004	METHOD AND APPARATUS FOR SAFE OPERATION OF A SWITCHING DEVICE	SIEMENS AKTIENGESELLSCHAFT	10/08/2007	KOLKATA
14	262611	1270/KOLNP/2007	07/09/2005	11/09/2004	SOLAR CELL ARRAY AND METHOD FOR CONNECTING A SOLAR CELL STRING	AZUR SPACE SOLAR POWER GMBH	20/07/2007	KOLKATA
15	262616	5075/KOLNP/2007	07/07/2006	08/07/2005	PROCESS FOR PREPARATION OF POLYMER CONJUGATES	ELAN PHARMACEUTICALS, INC.	02/01/2009	KOLKATA
16	262617	2340/KOLNP/2005	19/05/2004	23/05/2003	CARBOSTYRIL DERIVATIVES AND MOOD STABILIZERS FOR TREATING MOOD DISORDERS	OTSUKA PHARMACEUTICAL CO. LTD.	06/07/2007	KOLKATA
17	262618	470/KOL/2007	26/03/2007		A METHOD OF PRODUCING FOR TURBO-GENERATOR STATOR WINDING WITH DOUBLE ROEBEL BAR DESIGN FOR OPTIMISATION OF SIZE AND IMPROVEMENT OF EFFICIENCY OF MACHINE	BHARAT HEAVY ELECTRICALS LIMITED	10/10/2008	KOLKATA

18	262619	209/KOL/2009	06/02/2009	06/03/2008	A METHOD FOR REDUCING NOX EMISSION FOR DIESEL ENGINES	GM GLOBAL TECHNOLOGY OPERATIONS, INC.	11/09/2009	KOLKATA
19	262621	399/KOL/2003	23/07/2003		LED ARRANGEMENT AND OPERATING CIRCUITRY	ROHATGI VINEET KRISHNA	10/11/2006	KOLKATA
20	262622	1201/KOL/2006	10/11/2006	22/12/2005	AN ELECTRONICALLY VARIABLE TRANSMISSION OF A POWER TRAIN	GM GLOBAL TECHNOLOGY OPERATIONS ,INC	20/07/2007	KOLKATA
21	262623	32/KOL/2008	04/01/2008		AN IMPROVED LOW-EMBODIED ENERGY BUILDING INTEGRATED PHOTOVOLTAIC ROOF SYSTEM	BHARAT HEAVY ELECTRICALS LIMITED	10/07/2009	KOLKATA
22	262625	1421/KOLNP/2007	24/10/2005	04/11/2004	HOLDER FOR PARTS TO BE PAINTED	RENAULT S.A.S.	20/07/2007	KOLKATA
23	262630	761/KOL/2009	19/05/2009	20/05/2008	INFLUENCING SPECIFIC MECHANICAL PROPERTIES OF THREE-DIMENSIONAL OBJECTS MANUFACTURED BY A SELECTIVE SINTERING BY MEANS OF ELECTROMAGNETIC RADIATION FROM A POWDER COMPRISING AT LEAST ONE POLYMER OR COPOLYMER	EOS GMBH ELECTRO OPTICAL SYSTEMS	30/04/2010	KOLKATA
24	262631	3653/KOLNP/2006	06/05/2005	07/05/2004	A LANCET DEVICE	BECTON, DICKINSON AND COMPANY	15/06/2007	KOLKATA
25	262633	1334/KOLNP/2008	19/09/2006	20/09/2005	PROCESS FOR THE PREPARATION OF NOVEL CRYSTAL FORMS OF IRINOTECAN HYDROCHLORIDE	SCINOPHARM SINGAPORE PTE, LTD.	26/12/2008	KOLKATA
26	262635	556/KOLNP/2008	03/08/2006	17/08/2005	HYDROLYSIS-RESISTANT CELLULAR MATERIAL, COMPOSITION AND MANUFACTURING PROCESSES THEREOF	SAINT-GOBAIN PERFORMANCE PLASTICS CHAINEUX	07/11/2008	KOLKATA
27	262637	3599/KOLNP/2007	03/04/2006	01/04/2005	A FOOD COMPOSITION, METHOD FOR ITS PREPARATION AND METHOD FOR REDUCING OR REMOVING ACETALDEHYDE CONTAINED IN OR FROM A FOODSTUFF	BIOHIT OYJ	18/01/2008	KOLKATA
28	262640	2495/KOLNP/2009	11/01/2008	15/01/2007	A FUSION PROTEIN	GLAXOSMITHKLINE BIOLOGICALS SA	21/08/2009	KOLKATA

29	262641	425/KOL/2007	20/03/2007		HYBRID POWERTRAIN WITH VALVE ASSEMBLY FOR DUAL PUMPS	GM GLOBAL TECHNOLOGY OPERATIONS, INC.	03/10/2008	KOLKATA
30	262646	1510/KOLNP/2008	01/12/2006	21/12/2005	NOVEL COMBINATION OF R,R-GLYCOPYRROLATE, ROLIPRAM AND BUDESONIDE	MEDA PHARMA GMBH & CO KG	02/01/2009	KOLKATA
31	262647	1776/KOLNP/2009	21/11/2007	01/12/2006	PIPE MADE OF POLYETHYLENE COMPOSITION AND PROCESS OF MANUFACTURE THEREFOR	BOREALIS TECHNOLOGY OY	12/06/2009	KOLKATA
32	262651	2536/KOLNP/2006	25/02/2005	25/02/2004	A DEVICE FOR OCCLUDING AT LEAST ONE CONDUIT IN A HUMAN OR ANIMAL BODY	FEMASYS,INC	01/06/2007	KOLKATA
33	262652	1659/KOLNP/2008	11/09/2006	28/09/2005	A MILLING CUTTER AND AN INDEXABLE CUTTING INSERT	SECO TOOLS AB	30/01/2009	KOLKATA
34	262653	460/KOLNP/2007	19/07/2005	20/07/2004	HIGH-PRECISION SPINDLE ASSEMBLY FOR A DAVENPORT AUTOMATIC SCREW MACHINE	BRINKMAN PRODUCTS, INC.	06/07/2007	KOLKATA
35	262655	3692/KOLNP/2006	09/06/2005	18/06/2004	METHOD AND SYSTEM FOR PRESENTING RATES FOR TRAVEL SERVICES	EXPEDIA, INC.	15/06/2007	KOLKATA
36	262656	892/KOLNP/2009	16/01/2008	16/01/2008	CHLORINATED RUBBER COMPOSITION AND HOSE	THE YOKOHAMA RUBBER CO., LTD.	31/07/2009	KOLKATA
37	262660	495/KOLNP/2007	10/08/2005	11/08/2004	DEVICE AND HANDLING SYSTEM FOR MEASUREMENT OF MOBILITY AND SHEET CHARGE DENSITY IN CONDUCTIVE SHEET MATERIALS	LEHIGHTON ELECTRONICS, INC.	03/04/2009	KOLKATA
38	262662	1212/KOLNP/2008	06/09/2006	23/09/2005	HOUSING FOR A COMPONENT OF AN EXHAUST SYSTEM AND METHOD OF PRODUCING SUCH A HOUSING	EMCON TECHNOLOGIES GERMANY (AUGSBURG) GMBH	26/12/2008	KOLKATA
39	262663	1209/KOL/2007	31/08/2007	13/09/2006	A REGENERATION CONTROL SYSTEM FOR A PARTICULATE FILTER AND A METHOD TO REDUCE TEMPERATURE IN A PARTICULATE FILTER	GM GLOBAL TECHNOLOGY OPERATIONS, INC	18/04/2008	KOLKATA
40	262664	423/KOL/2008	04/03/2008	19/04/2007	A MULTI-SPEED TRANSMISSION	GM GLOBAL TECHNOLOGY OPERATIONS, INC.	07/11/2008	KOLKATA

41	262666	4731/KOLNP/2007	19/05/2006	20/05/2005	A PROCESS FOR CONTINUOUS CARBONYLATION BY SUPPORTED IONIC LIQUID-PHASE CATALYSIS	WACKER CHEMIE AG	15/02/2008	KOLKATA
42	262668	3867/KOLNP/2006	27/05/2005	28/05/2004	INJECTION DEVICE	CILAG GMBH INTERNATIONAL,	22/06/2007	KOLKATA
43	262669	3258/KOLNP/2007	15/02/2006	17/02/2005	A LIQUID ROTAVIRUS IMMUNOGENIC COMPOSITION	GLAXOSMITHKLINE BIOLOGICALS S.A.	04/01/2008	KOLKATA
44	262672	2567/KOLNP/2008	29/12/2006	31/12/2005	A METHOD OF PROVIDING VEHICLE INFORMATION TO AN OWNER AND OTHER RECIPIENT	GENERAL MOTORS CORPORATION	30/01/2009	KOLKATA
45	262673	1396/KOL/2008	19/08/2008 16:32:12	21/08/2007	PLATE FOR A FUEL CELL ASSEMBLY	GM GLOBAL TECHNOLOGY OPERATIONS, INC.	01/05/2009	KOLKATA
46	262674	1945/KOL/2008	03/11/2008 16:21:37		A METHOD OF PRODUCING SUPERCONDUCTING COIL PARTICULARLY ADAPTABLE TO HIGH TEMPERATURE SUPERCONDUCTING TRANSFORMERS	BHARAT HEAVY ELECTRICALS LIMITED	07/05/2010	KOLKATA

CONTINUED TO PART- 2

CONTINUED FROM PART- 1

INTRODUCTION

In view of the recent amendment made in the Designs (Amendment) Rules, 2008 with effect from 17/06/2008, Publication of the matter relating to Designs is being published in the Official Journal of The Patent Office. This Journal is being published on weekly basis on every Friday covering the various proceedings on Designs as required according to the provisions of under Rule 22, 25, 27 and 39 of the Design (Amendment) Rules, 2008. All the enquiries on this Official Journal and other information as required by the public should be addressed to the Controller General of Patents, Designs & Trade Marks. Suggestions and comments are requested from all quarters so that the content can be enriched.

COPYRIGHT PUBLICATION

SL NO	REGISTERED DESIGN NUMBERS	RENEWED ON
1.	186371	14.08.2014
2.	192966	25.07.2014
3.	186015	18.08.2014
4.	203425	14.08.2014
5.	190667	18.08.2014
6.	191903	14.08.2014
7.	190661	01.08.2014
8.	204723	18.08.2014
9.	205344	18.08.2014
10.	188805	25.07.2014
11.	190662	25.07.2014
12.	190663	25.07.2014
13.	190664	25.07.2014
14.	190666	14.08.2014
15.	195311	18.08.2014
16.	196018	14.08.2014
17.	204708	14.08.2014
18.	204707	14.08.2014
19.	204705	18.08.2014
20.	190669	13.08.2014
21.	190668	18.08.2014
22.	195176	25.07.2014

THE DESIGNS ACT 2000
SECTION 30
DESIGN ASSIGNMENT

(01)

The Design stands in the name of MOTOROLA, INC registered under the Designs Act, 2000 has been assigned in the Register of Designs in the name as follows:-

Design No.	Class	Name
225304	**14-03**	MOTOROLA MOBILITY, INC. OF, 600 NORTH US HIGHWAY 45, LIBERTYVILLE, IL 60048, USA, A DELAWARE CORPORATION

(02)

The Design stands in the name of SARA LEE HOUSEHOLD AND BODY CARE NEDERLAND B.V. registered under the Designs Act, 2000 has been assigned in the Register of Designs in the name as follows:-

Design No.	Class	Name
210670	**23-04**	SARA LEE HOUSEHOLD CARE NEDERLAND B.V OF, VLEUTENSEVAART 100, 3532 AD UTRECHT, THE NETHERLANDS, A DUTCH COMPANY

REGISTRATION OF DESIGNS

The following designs have been registered. They are now open for public inspection. In the following each entry the Date of Registration is shown. The Priority Number, Priority Date and Priority Country are also shown

DESIGN NUMBER	257251
CLASS	12-16
1)VOLVO LASTVAGNAR AB, OF 405 08 GÖTEBORG, SWEDEN	
DATE OF REGISTRATION	08/10/2013
TITLE	GRILLE FOR VEHICLE
PRIORITY	

PRIORITY NUMBER	DATE	COUNTRY
002219360-0007	12/04/2013	OHIM

DESIGN NUMBER	257887
CLASS	08-06
1)DIPAKBHAI BHIKHABHAI KHUNT (ADULT & INDIAN NATIONAL) SOLE PROPRIETOR OF OM SAI MANUFACTURE (INDIAN PROPRIETORSHIP CONCERN) HAVING PLACE OF BUSINESS AT- 6/A, PARSANA SOCIETY, 50, FEET ROAD, SHREENATHJI PAN, RAJKOT-360 002-GUJARAT-(INDIA)	
DATE OF REGISTRATION	31/10/2013
TITLE	HANDLE
PRIORITY NA	

DESIGN NUMBER	256896
CLASS	08-06
1)SANVI ENTERPRISE, AN INDIAN ENTITY HAVING ITS PRINCIPAL PLACE OF BUSINESS AT NATIONAL HIGHWAY 8-B, OPP. PARIN FURNITURE, KOTHARIYA SOLVENT AREA, NEAR DHOKIYA MOTORS, KOTHARIYA, DIST: RAJKOT-360004, GUJARAT, INDIA	
DATE OF REGISTRATION	30/09/2013
TITLE	CABINET HANDLE
PRIORITY NA	

DESIGN NUMBER	257260
CLASS	12-16
1)VOLVO LASTVAGNAR AB, OF 405 08 GÖTEBORG, SWEDEN	
DATE OF REGISTRATION	08/10/2013
TITLE	GRILLE FOR VEHICLE

PRIORITY

PRIORITY NUMBER	DATE	COUNTRY
002219568-0003	12/04/2013	OHIM

DESIGN NUMBER	257410
CLASS	12-16
1)VOLVO LASTVAGNAR AB, OF SE 405 08 GÖTEBORG, SWEDEN	
DATE OF REGISTRATION	10/10/2013
TITLE	ROOF AIR DEFLECTOR FOR VEHICLES

PRIORITY

PRIORITY NUMBER	DATE	COUNTRY
2013/0161	11/04/2013	SWEDEN

DESIGN NUMBER	257234
CLASS	21-01
1)S. M. TRADING CO., AN INDIAN PROPRIETORSHIP FIRM WHOSE PROPRIETOR IS MR. SATISH MANOCHA OF SHOP NO. 101, RANI JHANSI ROAD (RIGHT SIDE), DELHI 110 055, INDIA	
DATE OF REGISTRATION	07/10/2013
TITLE	CAP FOR TOY PISTOL

PRIORITY NA

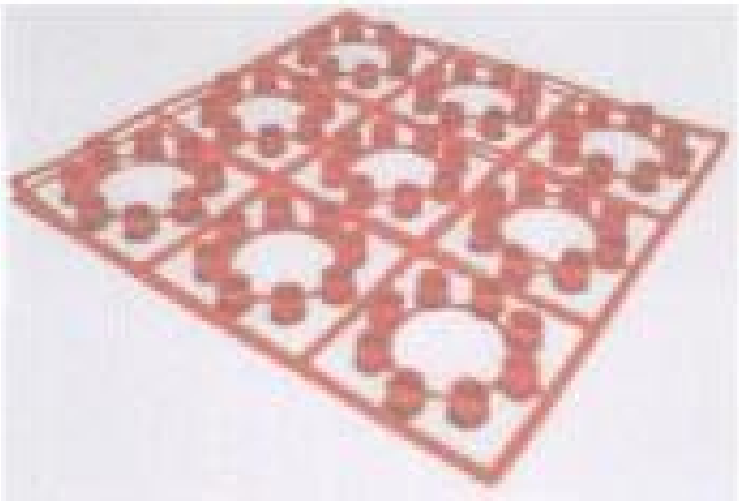

DESIGN NUMBER	257828
CLASS	24-02
1)KONINKLIJKE PHILIPS N.V., A COMPANY ORGANIZED AND EXISTING UNDER THE LAWS OF THE KINGDOM OF THE NETHERLANDS, RESIDING AT EINDHOVEN, WHOSE POST-OFFICE ADDRESS IS HIGH TECH CAMPUS 5, 5656 AE EINDHOVEN, THE NETHERLANDS	
DATE OF REGISTRATION	29/10/2013
TITLE	PATIENT INTERFACE ASSEMBLY FOR RESPIRATORY THERAPY

PRIORITY

PRIORITY NUMBER	DATE	COUNTRY
002233619-0004	07/05/2013	OHIM

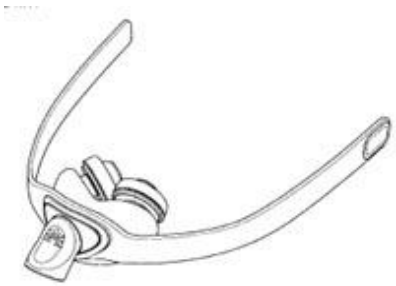

DESIGN NUMBER	251497
CLASS	12-05
1)KITO CORPORATION, A JAPANESE CORPORATION OF 2000, TSUIJIARAI, SHOWA-CHO, NAKAKOMA-GUN, YAMANASHI, 409-3853, JAPAN	
DATE OF REGISTRATION	07/02/2013
TITLE	CHAIN HOIST

PRIORITY

PRIORITY NUMBER	DATE	COUNTRY
2012-019242	09/08/2012	JAPAN

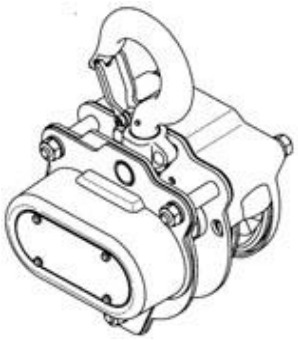

DESIGN NUMBER	259177
CLASS	28-03
1)KONINKLIJKE PHILIPS N.V., A COMPANY ORGANIZED AND EXISTING UNDER THE LAWS OF THE KINGDOM OF THE NETHERLANDS, RESIDING AT EINDHOVEN, WHOSE POST-OFFICE ADDRESS IS HIGH TECH CAMPUS 5, 5656 AE EINDHOVEN, THE NETHERLANDS	
DATE OF REGISTRATION	02/01/2014
TITLE	FACIAL CLEANSING BRUSH

PRIORITY

PRIORITY NUMBER	DATE	COUNTRY
002280313-0002	24/07/2013	OHIM

DESIGN NUMBER	258671	
CLASS	12-11	
1)TVS MOTOR COMPANY LIMITED, AN INDIAN COMPANY INCORPORATED UNDER THE COMPANIES ACT, 1956, HAVING ITS REGISTERED OFFICE AT "JAYALAKSHMI ESTATES", 29 (OLD NO. 8) HADDOWS ROAD, CHENNAI 600 006, TAMIL NADU, INDIA		
DATE OF REGISTRATION	11/12/2013	
TITLE	MOTORCYCLE	
PRIORITY NA		
DESIGN NUMBER	258880	
CLASS	09-01	
1)GODREJ CONSUMER PRODUCTS LIMITED, AN INDIAN COMPANY HAVING ITS REGISTERED OFFICE AT PIROJSHANAGAR, EASTERN EXPRESS HIGHWAY, VIKHROLI, MUMBAI-400079, STATE OF MAHARASHTRA, INDIA		
DATE OF REGISTRATION	19/12/2013	
TITLE	SOAP DISPENSER	
PRIORITY NA		
DESIGN NUMBER	259578	
CLASS	05-05	
1)PARRY MURRAY & CO. LTD., COMPANY REGISTERED UNDER THE LAWS OF ENGLAND AND WALES, HAVING ITS PRINCIPAL PLACE OF BUSINESS AT 3RD FLOOR, SIMPSON HOUSE, 6 CHERRY ORCHARD ROAD, CROYDON, CRO 6BA, UNITED KINGDOM		
DATE OF REGISTRATION	22/01/2014	
TITLE	TEXTILE FABRIC	
PRIORITY NA		

DESIGN NUMBER	259669	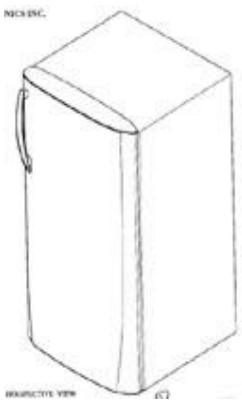
CLASS	15-07	
1)LG ELECTRONICS INC. 128 YEOUI-DAERO, YEONGDEUNGPO - GU, SEOUL 150 - 721, REPUBLIC OF KOREA A CORPORATION INCORPORATED UNDER THE LAWS OF THE REPUBLIC OF KOREA		
DATE OF REGISTRATION	24/01/2014	
TITLE	REFRIGERATOR	
PRIORITY NA		
DESIGN NUMBER	259812	
CLASS	12-11	
1)BAJAJ AUTO LIMITED, AN INDIAN COMPANY, INCORPORATED UNDER THE COMPANIES ACT OF 1956, HAVING ITS PRINCIPAL PLACE OF BUSINESS AT NEW 2ND & 3RD FLOOR, KHIVRAJ BUILDING, NO. 616, ANNASALAI, CHENNAI - 600006, STATE OF TAMIL NADU, INDIA, AND REGISTERED OFFICE AT AKURDI, PUNE-411035, STATE OF MAHARASHTRA, INDIA		
DATE OF REGISTRATION	29/01/2014	
TITLE	SILENCER END CHAMBER FOR MOTORCYCLE	
PRIORITY NA		
DESIGN NUMBER	257584	
CLASS	26-05	
1)M/S SHREE SANT KRIPA INTELLECTUAL, HAVING OFFICE AT 7, AKSHAY COMPLEX, OFF. DHOLE PATIL ROAD, PUNE-411001, MAHARASHTRA, INDIA, AN INDIAN COMPANY		
DATE OF REGISTRATION	21/10/2013	
TITLE	CEILING FIXTURES FOR LAMPS	
PRIORITY NA		

DESIGN NUMBER	257245
CLASS	12-16

1)VOLVO LASTVAGNAR AB, OF
405 08 GÖTEBORG, SWEDEN

DATE OF REGISTRATION	08/10/2013
TITLE	FRONT PANEL FOR VEHICLE

PRIORITY

PRIORITY NUMBER	DATE	COUNTRY
002219360-0001	12/04/2013	OHIM

DESIGN NUMBER	259225
CLASS	06-01

1)QUADRIFOGLIO SISTEMI D'ARREDO S.P.A., OF
VIA CORNARÈ, 12, 31040 MANSUE'. FRAZIONE BASALGHELLE - ITALY, AN ITALIAN JOINT STOCK COMPANY.

DATE OF REGISTRATION	03/01/2014
TITLE	CHAIR

PRIORITY

PRIORITY NUMBER	DATE	COUNTRY
TV2013O000027	10/07/2013	ITALY

DESIGN NUMBER	259317
CLASS	12-11

1)HONDA MOTOR CO., LTD., A JAPANESE CORPORATION,
OF 1-1, MINAMI-AOYAMA 2-CHOME, MINATO-KU, TOKYO, 107-8556, JAPAN

DATE OF REGISTRATION	10/01/2014
TITLE	MOTOR SCOOTER

PRIORITY

PRIORITY NUMBER	DATE	COUNTRY
2013-016371	18/07/2013	JAPAN

DESIGN NUMBER	259565
CLASS	02-02
1)SWASTIKA GARMENTS OF 4, RAMKUMAR RAKSHIT LANE, KOLKATA-700007, WEST BENGAL, INDIA, AN INDIAN PROPRIETORSHIP FIRM WHOSE PROPRIETOR IS BRIJGOPAL MUNDHARA, AN INDIAN OF THE ABOVE ADDRESS	
DATE OF REGISTRATION	22/01/2014
TITLE	GARMENT SET
PRIORITY NA	

DESIGN NUMBER	259800
CLASS	09-01
1)PARIS PERFUMES & COSMETICS PVT LTD. AN INDIAN NATIONAL COMPANY INCORPORATED UNDER THE COMPANIES ACT 1956 BARODA-JAMBUSAR N. H. WAY ROAD, AT & PO. DABHASA, TA. PADRA-391440, DIST. BARODA (GUJARAT), INDIA.	
DATE OF REGISTRATION	29/01/2014
TITLE	CONTAINER
PRIORITY NA	

DESIGN NUMBER	257733
CLASS	09-03
1)VALEO SERVICE, A FRENCH COMPANY, OF 70 RUE PLEYEL, 93200 SAINT DENIS, FRANCE	
DATE OF REGISTRATION	24/10/2013
TITLE	PACKAGING FOR WIPER BLADES AND THEIR PARTS

PRIORITY

PRIORITY NUMBER	DATE	COUNTRY
201330136192.5	24/04/2013	CHINA

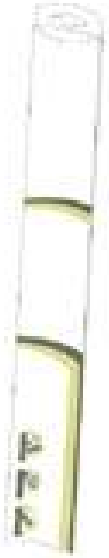

DESIGN NUMBER	257419
CLASS	21-01
1)VOLVO LASTVAGNAR AB, OF SE 405 08 GÖTEBORG, SWEDEN.	
DATE OF REGISTRATION	10/10/2013
TITLE	TOY TRUCK CAB

PRIORITY

PRIORITY NUMBER	DATE	COUNTRY
2013/0173	11/04/2013	SWEDEN

DESIGN NUMBER	257827
CLASS	24-02
1)KONINKLIJKE PHILIPS N.V., A COMPANY ORGANIZED AND EXISTING UNDER THE LAWS OF THE KINGDOM OF THE NETHERLANDS, RESIDING AT EINDHOVEN, WHOSE POST-OFFICE ADDRESS IS HIGH TECH CAMPUS 5, 5656 AE EINDHOVEN, THE NETHERLANDS	
DATE OF REGISTRATION	29/10/2013
TITLE	PATIENT INTERFACE ASSEMBLY FOR RESPIRATORY THERAPY

PRIORITY

PRIORITY NUMBER	DATE	COUNTRY
002233619-0002	07/05/2013	OHIM

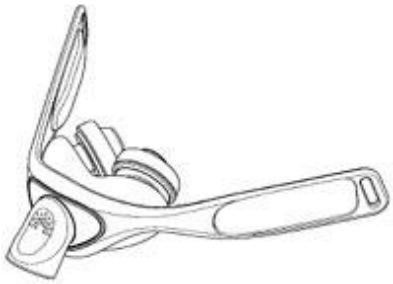

DESIGN NUMBER	255357
CLASS	09-01
1)"RC02 WASHINGTON, INC.", HAVING NATIONALITY OF UNITED STATES OF AMERICA 701 FIFTH AVENUE, SUITE 4200 SEATTLE, WASHINGTON 98104 UNITED STATES OF AMERICA	
DATE OF REGISTRATION	19/07/2013
TITLE	BOTTLE

PRIORITY

PRIORITY NUMBER	DATE	COUNTRY
29/443,754	22/01/2013	U.S.A.

DESIGN NUMBER	259176	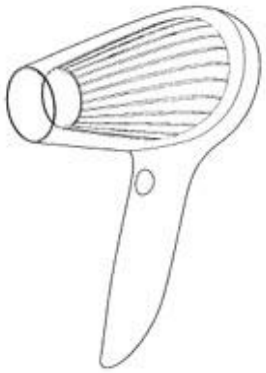
CLASS	28-03	
1)KONINKLIJKE PHILIPS N.V., A COMPANY ORGANIZED AND EXISTING UNDER THE LAWS OF THE KINGDOM OF THE NETHERLANDS, RESIDING AT EINDHOVEN, WHOSE POST-OFFICE ADDRESS IS HIGH TECH CAMPUS 5, 5656 AE EINDHOVEN, THE NETHERLANDS		
DATE OF REGISTRATION	02/01/2014	
TITLE	HAIR DRYER	
PRIORITY		

PRIORITY NUMBER	DATE	COUNTRY
002280313-0001	24/07/2013	OHIM

DESIGN NUMBER	259441	
CLASS	23-01	
1)PRAKASHBHAI D. JARSANIYA., INDIAN NATIONALITY, SOLE PROPRIETOR OF M/S. ASHOK POLYMERS, INDIAN NATIONALITY, HAVING ADDRESS AT 4, SHREENATHJI ESTATE, NR. G.V.M.M., B/H. DEVBHUMI ESTATE, SINGARVA ROAD, ODHAV, AHMEDABAD-382430, GUJARAT STATE, INDIA		
DATE OF REGISTRATION	16/01/2014	
TITLE	BALL VALVE	
PRIORITY NA		

DESIGN NUMBER	259532	
CLASS	05-05	
1)SATHEESAN V C/O AVID APPAREL INDUSTRIES, B-17, SECTOR-58 NOIDA-201301 (UP) INDIA, INDIAN		
DATE OF REGISTRATION	20/01/2014	
TITLE	TEXTILE FABRIC	
PRIORITY NA		

DESIGN NUMBER	259576
CLASS	05-05
1)PARRY MURRAY & CO. LTD., COMPANY REGISTERED UNDER THE LAWS OF ENGLAND AND WALES, HAVING ITS PRINCIPAL PLACE OF BUSINESS AT 3RD FLOOR, SIMPSON HOUSE, 6 CHERRY ORCHARD ROAD, CROYDON, CRO 6BA, UNITED KINGDOM	
DATE OF REGISTRATION	22/01/2014
TITLE	TEXTILE FABRIC
PRIORITY NA	

DESIGN NUMBER	259668
CLASS	15-05
1)LG ELECTRONICS INC. 128 YEOUI-DAERO, YEONGDEUNGPO - GU, SEOUL 150 - 721, REPUBLIC OF KOREA A CORPORATION INCORPORATED UNDER THE LAWS OF THE REPUBLIC OF KOREA	
DATE OF REGISTRATION	24/01/2014
TITLE	WASHING MACHINE
PRIORITY NA	

DESIGN NUMBER	257583
CLASS	26-05
1)M/S SHREE SANT KRIPA INTELLECTUAL, HAVING OFFICE AT 7, AKSHAY COMPLEX, OFF. DHOLE PATIL ROAD, PUNE-411001, MAHARASHTRA, INDIA, AN INDIAN COMPANY	
DATE OF REGISTRATION	21/10/2013
TITLE	CEILING FIXTURES FOR LAMPS
PRIORITY NA	

DESIGN NUMBER	257166
CLASS	03-01
1)DOMINIK MAREK, OF ZA SOKOLOVNOU 601, 285 04 UHLIRSKE JANOVICE, CZECH REPUBLIC	
DATE OF REGISTRATION	03/10/2013
TITLE	SHOPPING BAG
PRIORITY NA	

DESIGN NUMBER	257735
CLASS	15-99
1)ZEN TECHNOLOGIES LIMITED, WHOSE ADDRESS IS B-42, INDUSTRIAL ESTATE, SANATHNAGAR, HYDERABAD-500018, ANDHRA PRADESH AND WHOSE NATIONALITY IS INDIA	
DATE OF REGISTRATION	25/10/2013
TITLE	MOTION PLATFORM ASSEMBLY FOR DRIVING SIMULATORS
PRIORITY NA	

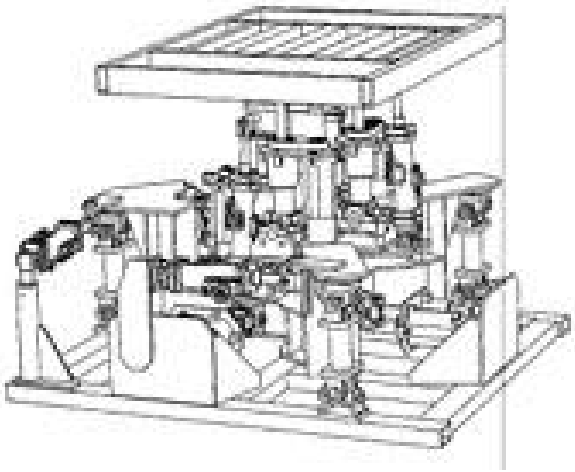

DESIGN NUMBER	258296
CLASS	06-04
1)ASSA ABLOY ASIA PACIFIC LIMITED OF 33/F LAWS COMMERCIAL PLAZA, 788 CHEUNG SHA WAN ROAD, KOWLOON, HONG KONG	
DATE OF REGISTRATION	22/11/2013
TITLE	SAFE
PRIORITY NA	

DESIGN NUMBER	258384
CLASS	02-03
1)M/S STEELBIRD HI-TECH INDIA LIMITED, A COMPANY INCORPORATED UNDER THE COMPANIES ACT, 1956, HAVING ITS REGISTERED OFFICE AT B2B 17, NEAR METRO PILLAR 540, JANAK PURI, NEW DELHI-110058	
DATE OF REGISTRATION	26/11/2013
TITLE	HELMET
PRIORITY NA	

DESIGN NUMBER	259572
CLASS	05-05
1)PARRY MURRAY & CO. LTD., COMPANY REGISTERED UNDER THE LAWS OF ENGLAND AND WALES, HAVING ITS PRINCIPAL PLACE OF BUSINESS AT 3RD FLOOR, SIMPSON HOUSE, 6 CHERRY ORCHARD ROAD, CROYDON, CRO 6BA, UNITED KINGDOM	
DATE OF REGISTRATION	22/01/2014
TITLE	TEXTILE FABRIC
PRIORITY NA	

DESIGN NUMBER	259664
CLASS	08-09
1)CHANDAN JAIN, AN INDIAN NATIONAL, OF THE ADDRESS 6A, SESSION MARG, NEAR SAMARPAN HOSPITAL, KARNAL-132001, HARYANA, INDIA	
DATE OF REGISTRATION	24/01/2014
TITLE	DOOR CLOSER
PRIORITY NA	

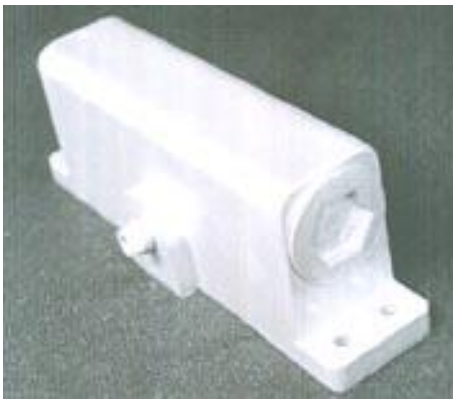

DESIGN NUMBER	259055
CLASS	14-03
1)NOKIA CORPORATION, A FINNISH CORPORATION, OF THE ADDRESS KEILALAHDENTIE 4, ESPOO, FINLAND 02150	
DATE OF REGISTRATION	27/12/2013
TITLE	TABLET COMPUTER

PRIORITY

PRIORITY NUMBER	DATE	COUNTRY
29/464957	22/08/2013	U.S.A.

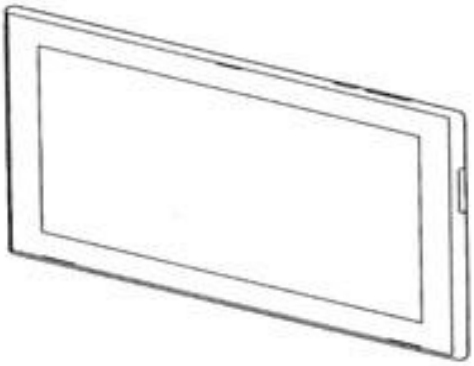

DESIGN NUMBER	257579
CLASS	26-05
1)M/S SHREE SANT KRIPA INTELLECTUAL, HAVING OFFICE AT 7, AKSHAY COMPLEX, OFF. DHOLE PATIL ROAD, PUNE-411001, MAHARASHTRA, INDIA, AN INDIAN COMPANY	
DATE OF REGISTRATION	21/10/2013
TITLE	CEILING FIXTURES FOR LAMPS

PRIORITY NA

DESIGN NUMBER	257744
CLASS	12-08
1)DR. ING. H.C.F. PORSCHE AKTIENGESELLSCHAFT, A GERMAN COMPANY OF PORSCHEPLATZ 1, 70435 STUTTGART, GERMANY	
DATE OF REGISTRATION	25/10/2013
TITLE	CAR

PRIORITY NA

DESIGN NUMBER	257249
CLASS	12-16
1)VOLVO LASTVAGNAR AB, OF 405 08 GÖTEBORG, SWEDEN	
DATE OF REGISTRATION	08/10/2013
TITLE	FRONT PANEL FOR VEHICLE

PRIORITY

PRIORITY NUMBER	DATE	COUNTRY
002219360-0005	12/04/2013	OHIM

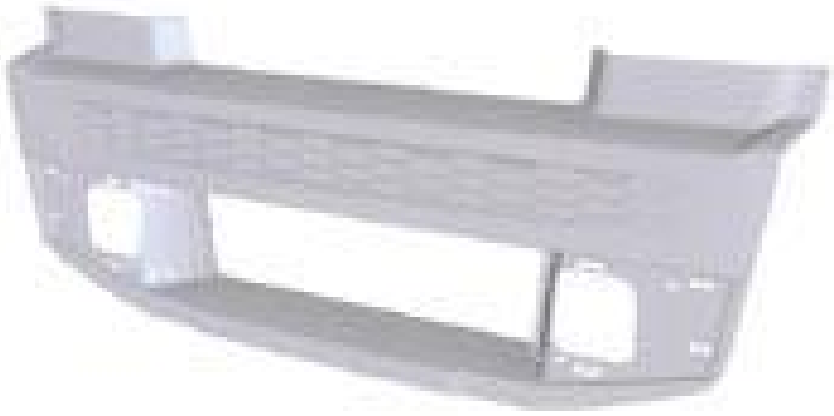

DESIGN NUMBER	257870
CLASS	15-99
1)SULZER MIXPAC AG, OF RÜTISTRASSE 7, 9469 HAAG, SWITZERLAND	
DATE OF REGISTRATION	30/10/2013
TITLE	INDUSTRIAL MIXER

PRIORITY

PRIORITY NUMBER	DATE	COUNTRY
139967	29/05/2013	SWITZERLAND

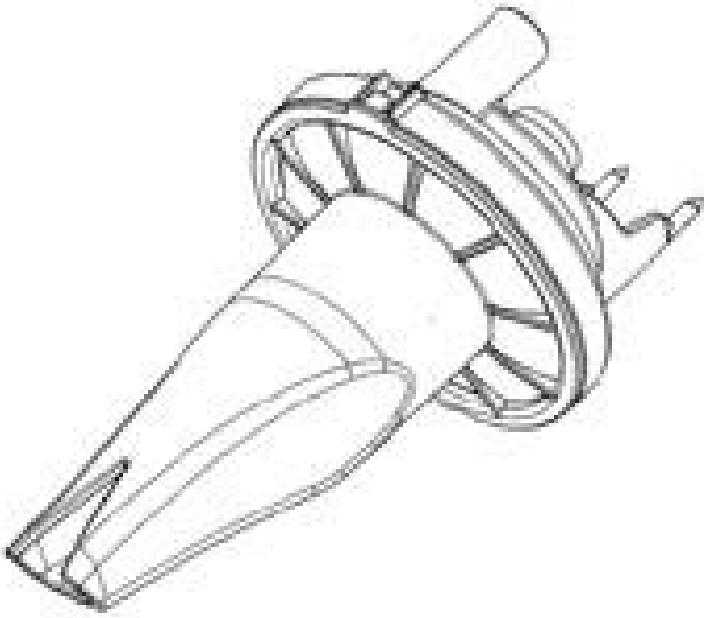

DESIGN NUMBER	259194
CLASS	07-01
1)RAVISSANT PRIVATE LIMITED, AN INDIAN COMPANY, OF THE ADDRESS 50-51, COMMERCIAL COMPLEX, NEW FRIENDS COLONY, NEW DELHI-110065, INDIA	
DATE OF REGISTRATION	03/01/2014
TITLE	BOWL

PRIORITY NA

DESIGN NUMBER	259552
CLASS	13-03
1)YAZAKI CORPORATION, A JAPANESE CORPORATION OF 4-28, MITA 1-CHOME, MINATO-KU, TOKYO 108-8333 JAPAN	
DATE OF REGISTRATION	21/01/2014
TITLE	HOUSING FOR ELECTRIC CONNECTOR

PRIORITY

PRIORITY NUMBER	DATE	COUNTRY
2013-016591	22/07/2013	JAPAN

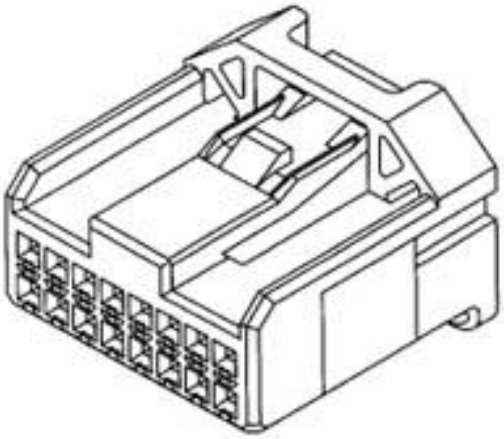

DESIGN NUMBER	259135
CLASS	13-03
1)ABB INDIA LIMITED, HAVING REGISTERED OFFICE AT 2ND FLOOR, EAST WING, KHANIJA BHAVAN, 49, RACE COURSE ROAD, BANGALORE 560001, KARNATAKA, INDIA, AN INDIAN COMPANY	
DATE OF REGISTRATION	30/12/2013
TITLE	CEILING ROSE COVER

PRIORITY NA

DESIGN NUMBER	257258
CLASS	12-16
1)VOLVO LASTVAGNAR AB, OF 405 08 GÖTEBORG, SWEDEN	
DATE OF REGISTRATION	08/10/2013
TITLE	FRONT PANEL FOR VEHICLE

PRIORITY

PRIORITY NUMBER	DATE	COUNTRY
002219568-0001	12/04/2013	OHIM

DESIGN NUMBER	257246
CLASS	12-16
1)VOLVO LASTVAGNAR AB, OF 405 08 GÖTEBORG, SWEDEN	
DATE OF REGISTRATION	08/10/2013
TITLE	FRONT PANEL FOR VEHICLE
PRIORITY	

PRIORITY NUMBER	DATE	COUNTRY
002219360-0002	12/04/2013	OHIM

DESIGN NUMBER	259183
CLASS	19-06
1)ADD CORPORATION LIMITED OF BUSINESS PARK, 6TH FLOOR, CHINCHOLI NAKA, S. V. ROAD, MALAD (WEST), MUMBAI-400064, MAHARASHTRA, INDIA, INDIAN COMPANY	
DATE OF REGISTRATION	02/01/2014
TITLE	PENCIL
PRIORITY NA	

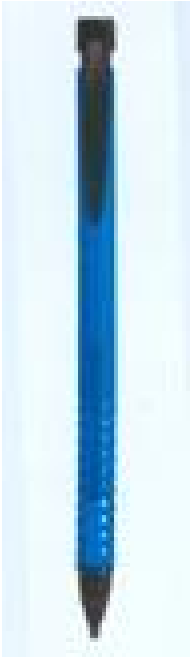

DESIGN NUMBER	259776
CLASS	09-01
1)VFF (INDIA) LIMITED AN INDIAN COMPANY INCORPORATED UNDER THE PROVISIONS OF THE COMPANIES ACT, HAVING OFFICE OPP. SION FORT GARDEN, 109, SION (EAST), MUMBAI-400022, MAHARASHTRA, INDIA	
DATE OF REGISTRATION	29/01/2014
TITLE	BOTTLE
PRIORITY NA	

DESIGN NUMBER	257381
CLASS	10-07

1)SWATCH AG (SWATCH SA) (SWATCH LTD), A SWISS COMPANY OF
JAKOB-STAMPFLI-STRASSE 94, CH-2502 BIEL/BIENNE, SWITZERLAND

DATE OF REGISTRATION	10/10/2013
TITLE	WATCH MOVEMENT

PRIORITY

PRIORITY NUMBER	DATE	COUNTRY
DM 080 666	16/04/2013	WIPO

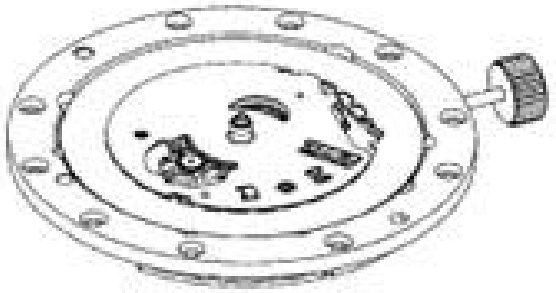

DESIGN NUMBER	258892
CLASS	12-16

1)HONDA MOTOR CO., LTD., A JAPANESE CORPORATION, OF
1-1, MINAMI-AOYAMA 2-CHOME, MINATO-KU, TOKYO, 107-8556, JAPAN

DATE OF REGISTRATION	20/12/2013
TITLE	INSTRUMENT PANEL FOR AUTOMOBILE

PRIORITY

PRIORITY NUMBER	DATE	COUNTRY
2013-014755	28/06/2013	JAPAN

DESIGN NUMBER	259057
CLASS	14-03

1)NOKIA CORPORATION, A FINNISH CORPORATION
OF THE ADDRESS KEILALAHDENTIE 4, ESPOO, FINLAND 02150

DATE OF REGISTRATION	27/12/2013
TITLE	MOBILE PHONE COVER

PRIORITY

PRIORITY NUMBER	DATE	COUNTRY
29/465240	26/08/2013	U.S.A.

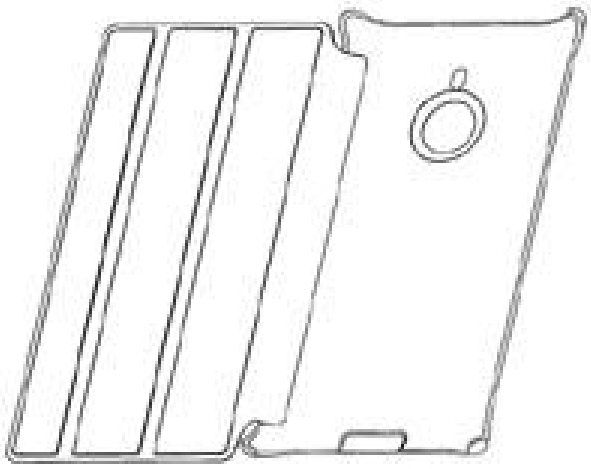

DESIGN NUMBER	259666
CLASS	15-05
1)LG ELECTRONICS INC. 128 YEOUI-DAERO, YEONGDEUNGPO - GU, SEOUL 150 - 721, REPUBLIC OF KOREA A CORPORATION INCORPORATED UNDER THE LAWS OF THE REPUBLIC OF KOREA	
DATE OF REGISTRATION	24/01/2014
TITLE	WASHING MACHINE
PRIORITY NA	

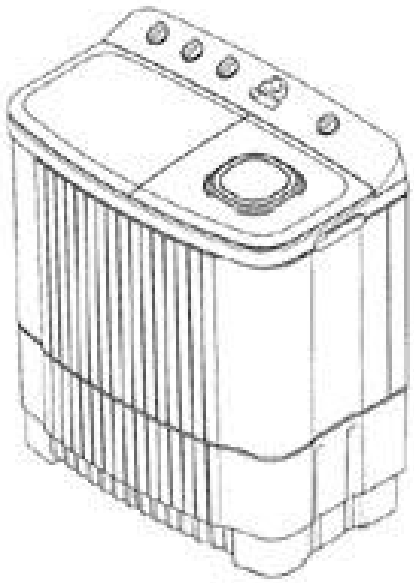

DESIGN NUMBER	257581
CLASS	26-05
1)M/S SHREE SANT KRIPA INTELLECTUAL, HAVING OFFICE AT 7, AKSHAY COMPLEX, OFF. DHOLE PATIL ROAD, PUNE-411001, MAHARASHTRA, INDIA, AN INDIAN COMPANY	
DATE OF REGISTRATION	21/10/2013
TITLE	CEILING FIXTURES FOR LAMPS
PRIORITY NA	

DESIGN NUMBER	257300
CLASS	09-03
1)INTERNATIONAL COSMETIC SUPPLIERS LTD., A CORPORATION ORGANIZED AND EXISTING UNDER THE LAW OF TAIWAN, OF 4F, #96, SECTION 1 CHIEN KUO NORTH ROAD, TAIPEI 10489, TAIWAN	
DATE OF REGISTRATION	08/10/2013
TITLE	CONTAINER
PRIORITY NA	

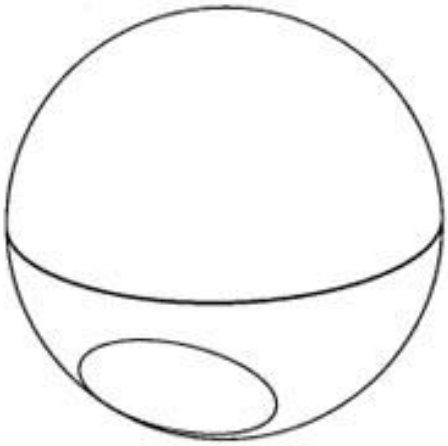

DESIGN NUMBER	257488
CLASS	07-01

1)K. B. PRODUCTS PVT. LTD., (AN INDIAN PRIVATE LIMITED COMPANY REGISTERED UNDER THE INDIAN COMPANIES ACT 1956), OF
946, DADOBA COMPOUND, VAL-VILLAGE, ANJUR FATA, TAL. BHIWANDI, DIST-THANE, MAHARASHTRA, PIN-421 302, MAHARASHTRA, INDIA

DATE OF REGISTRATION	14/10/2013
TITLE	JAR

PRIORITY NA

DESIGN NUMBER	257243
CLASS	21-01

1)VOLVO LASTVAGNAR AB, OF
405 08 GÖTEBORG, SWEDEN

DATE OF REGISTRATION	08/10/2013
TITLE	TOY TRUCK

PRIORITY

PRIORITY NUMBER	DATE	COUNTRY
002219204-0001	12/04/2013	OHIM

DESIGN NUMBER	258045
CLASS	08-08

1)MUNAWER JAMAL, INDIAN NATIONAL,
7 KM STONE, PREM NAGAR EXPORT ZONE, KANTH ROAD, MORADABAD-244 001, UTTAR PRADESH, INDIA.

DATE OF REGISTRATION	08/11/2013
TITLE	WALL HANGER

PRIORITY NA

DESIGN NUMBER	258150
CLASS	26-05
1)3M INNOVATIVE PROPERTIES COMPANY, A COMPANY INCORPORATED IN THE STATE OF DELAWARE OF 3M CENTER, SAINT PAUL, MINNESOTA 55133-3427, U.S.A.	
DATE OF REGISTRATION	14/11/2013
TITLE	LIGHTGUIDE LIGHTING ASSEMBLY

PRIORITY

PRIORITY NUMBER	DATE	COUNTRY
29/454,868	15/05/2013	U.S.A.

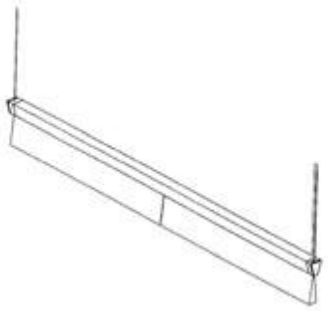

DESIGN NUMBER	259179
CLASS	28-03
1)KONINKLIJKE PHILIPS N.V., A COMPANY ORGANIZED AND EXISTING UNDER THE LAWS OF THE KINGDOM OF THE NETHERLANDS, RESIDING AT EINDHOVEN, WHOSE POST-OFFICE ADDRESS IS HIGH TECH CAMPUS 5, 5656 AE EINDHOVEN, THE NETHERLANDS	
DATE OF REGISTRATION	02/01/2014
TITLE	EPILATOR

PRIORITY

PRIORITY NUMBER	DATE	COUNTRY
002280313-0005	24/07/2013	OHIM

DESIGN NUMBER	256601
CLASS	08-06
1)HARESHBHAI SAVJIBHA FACHARA (INDIAN NATIONAL) AND SOLE PROPRIETOR OF M/S. J. B. ENTERPRISE HAVING PLACE OF BUSINESS AT, PLOT NO. 01, SURVEY NO. 31, NR. RAJ FIBER, VAVDI, GONDAL ROAD, RAJKOT. (GUJARAT)	
DATE OF REGISTRATION	19/09/2013
TITLE	HANDLE
PRIORITY NA	

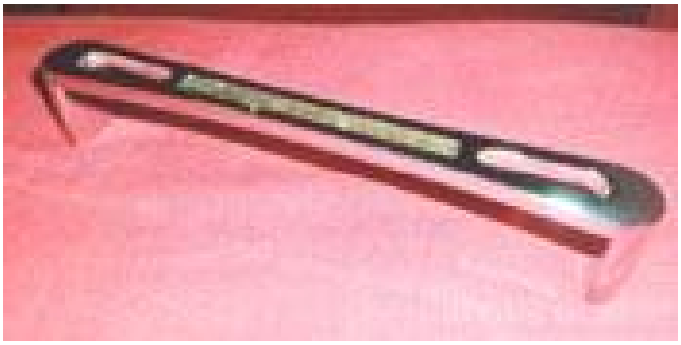

DESIGN NUMBER	259671
CLASS	23-01
1)LG ELECTRONICS INC. 128 YEOUI-DAERO, YEONGDEUNGPO - GU, SEOUL 150 - 721, REPUBLIC OF KOREA A CORPORATION INCORPORATED UNDER THE LAWS OF THE REPUBLIC OF KOREA	
DATE OF REGISTRATION	24/01/2014
TITLE	WATER PURIFIER
PRIORITY NA	

DESIGN NUMBER	256833
CLASS	26-05
1)FLOS S.P.A., AN ITALIAN COMPANY, VIA A. FAINI, 2, I-25073 BOVEZZO, BRESCIA, ITALY.	
DATE OF REGISTRATION	26/09/2013
TITLE	TABLE LAMP

PRIORITY

PRIORITY NUMBER	DATE	COUNTRY
BS2013O000012	29/03/2013	ITALY

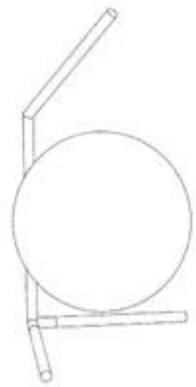

DESIGN NUMBER	257766
CLASS	31-00
1)KONINKLIJKE PHILIPS N.V., A COMPANY ORGANIZED AND EXISTING UNDER THE LAWS OF THE KINGDOM OF THE NETHERLANDS, RESIDING AT EINDHOVEN, WHOSE POST-OFFICE ADDRESS IS HIGH TECH CAMPUS 5, 5656 AE EINDHOVEN, THE NETHERLANDS	
DATE OF REGISTRATION	25/10/2013
TITLE	JUICER

PRIORITY

PRIORITY NUMBER	DATE	COUNTRY
002233429-0001	07/05/2013	OHIM

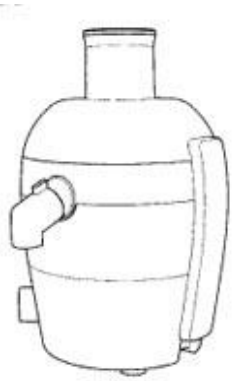

DESIGN NUMBER	257250
CLASS	12-16
1)VOLVO LASTVAGNAR AB, OF 405 08 GÖTEBORG, SWEDEN	
DATE OF REGISTRATION	08/10/2013
TITLE	GRILLE FOR VEHICLE

PRIORITY

PRIORITY NUMBER	DATE	COUNTRY
002219360-0006	12/04/2013	OHIM

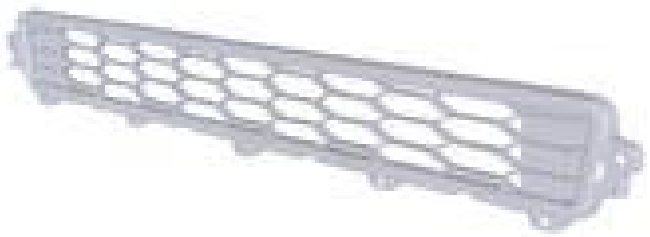

DESIGN NUMBER	254416
CLASS	08-07
1)PRAVIN LUNIA, P/O DELTA SEALS & ELECTRICALS, 445, SADHU VASVANI NAGAR, INDORE-452 001, (M.P.)	
DATE OF REGISTRATION	11/06/2013
TITLE	SECURITY SEAL

PRIORITY NA

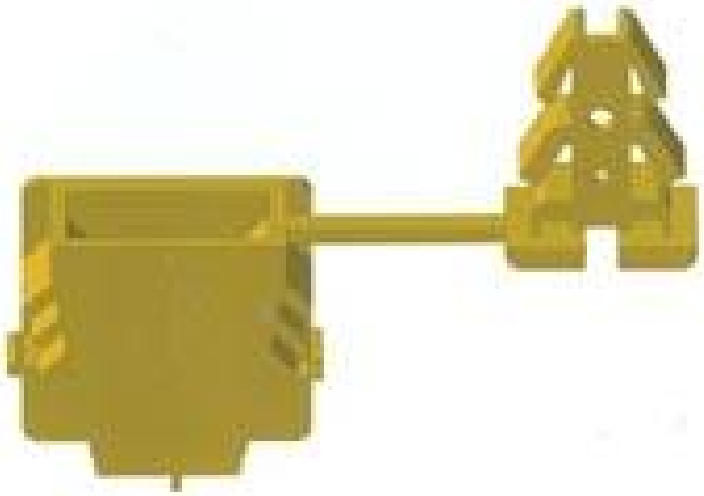

DESIGN NUMBER	259285
CLASS	23-01
1)HANSGROHE SE, OF AUESTR. 5-9, D-77761 SCHILTACH, GERMANY, A GERMAN COMPANY	
DATE OF REGISTRATION	07/01/2014
TITLE	GRIP FOR A FAUCET

PRIORITY

PRIORITY NUMBER	DATE	COUNTRY
001379184-0005	29/07/2013	OHIM

DESIGN NUMBER	259553

CLASS	13-03
1)YAZAKI CORPORATION, A JAPANESE CORPORATION OF 4-28, MITA 1-CHOME, MINATO-KU, TOKYO 108-8333 JAPAN	
DATE OF REGISTRATION	21/01/2014
TITLE	HOUSING FOR ELECTRIC CONNECTOR

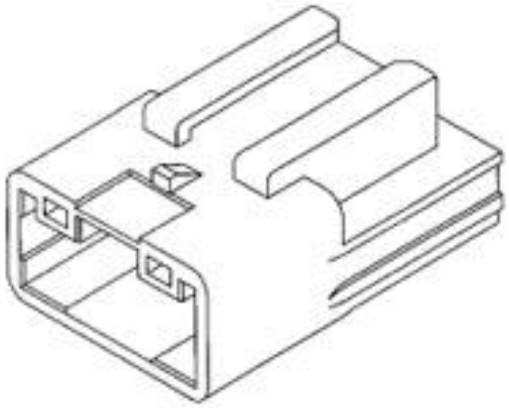

PRIORITY

PRIORITY NUMBER	DATE	COUNTRY
2013-016592	22/07/2013	JAPAN

DESIGN NUMBER	259099
CLASS	19-06
1)K-NINE WRITING SYSTEMS PVT. LTD. (AN INDIAN NATIONAL) UNIT NO: A-301/302, SUNFLOWER BUILDING, PLOT NO-36 A, SHIVNERI MARG, OFF GOREGAON-MULUND LINK ROAD, AMBEDKAR CHOWK, GOREGAON-EAST, MUMBAI-400063, STATE OF MAHARASHTRA, INDIA.	
DATE OF REGISTRATION	27/12/2013
TITLE	PEN

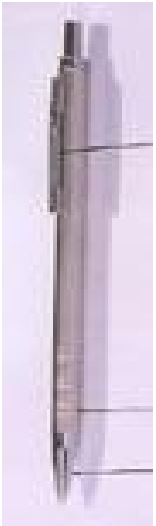

PRIORITY NA

DESIGN NUMBER	257259
CLASS	12-16
1)VOLVO LASTVAGNAR AB, OF 405 08 GÖTEBORG, SWEDEN	
DATE OF REGISTRATION	08/10/2013
TITLE	FRONT PANEL FOR VEHICLE

PRIORITY

PRIORITY NUMBER	DATE	COUNTRY
002219568-0002	12/04/2013	OHIM

DESIGN NUMBER	257242
CLASS	12-08
1)VOLVO LASTVAGNAR AB, OF 405 08 GÖTEBORG, SWEDEN	
DATE OF REGISTRATION	08/10/2013
TITLE	VEHICLE CAB

PRIORITY

PRIORITY NUMBER	DATE	COUNTRY
002219204-0001	12/04/2013	OHIM

DESIGN NUMBER	257829
CLASS	24-02
1)KONINKLIJKE PHILIPS N.V., A COMPANY ORGANIZED AND EXISTING UNDER THE LAWS OF THE KINGDOM OF THE NETHERLANDS, RESIDING AT EINDHOVEN, WHOSE POST-OFFICE ADDRESS IS HIGH TECH CAMPUS 5, 5656 AE EINDHOVEN, THE NETHERLANDS	
DATE OF REGISTRATION	29/10/2013
TITLE	FRAME FOR A PATIENT INTERFACE ASSEMBLY FOR RESPIRATORY THERAPY

PRIORITY

PRIORITY NUMBER	DATE	COUNTRY
002233619-0003	07/05/2013	OHIM

DESIGN NUMBER	258035
CLASS	17-01
1)SYDNEY MATHEWS, A CANADIAN NATIONAL OF THE ADDRESS 200 RIDEAU TERRACE, APT 1403 OTTAWA, ONTARIO K1M 0Z3, CANADA	
DATE OF REGISTRATION	07/11/2013
TITLE	KEYBOARD KEY

PRIORITY

PRIORITY NUMBER	DATE	COUNTRY
152476	20/08/2013	CANADA

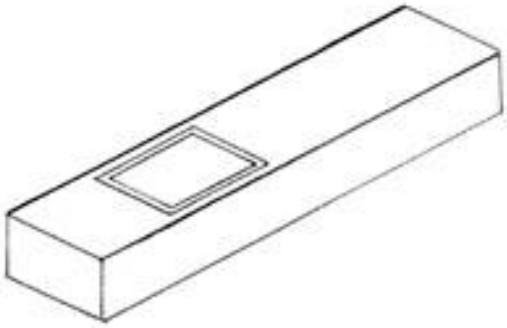

DESIGN NUMBER	251498
CLASS	12-05

1)KITO CORPORATION,
2000, TSUIJIARAI, SHOWA-CHO, NAKAKOMA-GUN, YAMANASHI, 409-3853, JAPAN; A JAPANESE CORPORATION

DATE OF REGISTRATION	07/02/2013
TITLE	CHAIN HOIST

PRIORITY

PRIORITY NUMBER	DATE	COUNTRY
2012-019241	09/08/2012	JAPAN

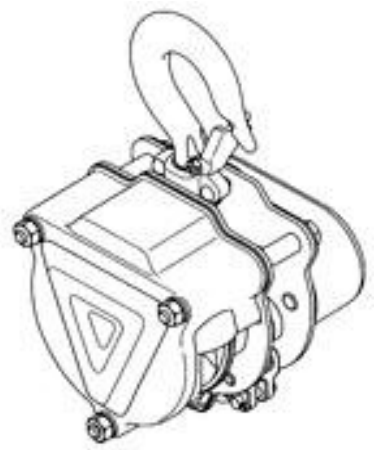

DESIGN NUMBER	259178
CLASS	28-03

1)KONINKLIJKE PHILIPS N.V., A COMPANY ORGANIZED AND EXISTING UNDER THE LAWS OF THE KINGDOM OF THE NETHERLANDS, RESIDING AT EINDHOVEN, WHOSE POST-OFFICE ADDRESS IS
HIGH TECH CAMPUS 5, 5656 AE EINDHOVEN, THE NETHERLANDS

DATE OF REGISTRATION	02/01/2014
TITLE	HAIR REMOVAL DEVICE

PRIORITY

PRIORITY NUMBER	DATE	COUNTRY
002280313-0003	24/07/2013	OHIM

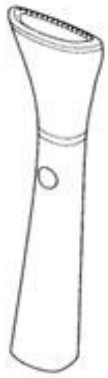

DESIGN NUMBER	259251
CLASS	09-07

1)SH. MANISH GOYAL,
133, KAPIL VIHAR, PITAMPURA, DELHI-110034, (INDIA). AN INDIAN NATIONAL OF THE ABOVE ADDRESS

DATE OF REGISTRATION	06/01/2014
TITLE	BOTTLE CAP

PRIORITY NA

DESIGN NUMBER	259670
CLASS	15-07

1)LG ELECTRONICS INC.
128 YEOUI-DAERO, YEONGDEUNGPO - GU, SEOUL 150 - 721, REPUBLIC OF KOREA A CORPORATION INCORPORATED UNDER THE LAWS OF THE REPUBLIC OF KOREA

DATE OF REGISTRATION	24/01/2014
TITLE	REFRIGERATOR

PRIORITY NA

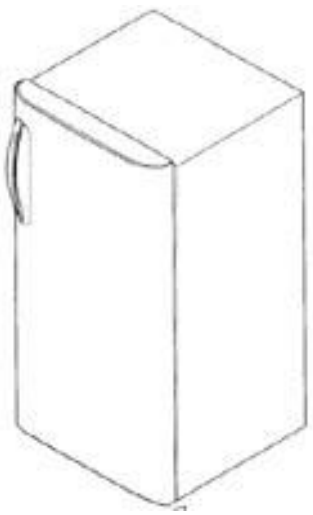

DESIGN NUMBER	259813
CLASS	12-11

1)BAJAJ AUTO LIMITED, AN INDIAN COMPANY, INCORPORATED UNDER THE COMPANIES ACT OF 1956, HAVING ITS PRINCIPAL PLACE OF BUSINESS AT NEW 2ND & 3RD FLOOR, KHIVRAJ BUILDING, NO. 616, ANNASALAI, CHENNAI - 600006, STATE OF TAMIL NADU, INDIA, AND REGISTERED OFFICE AT
AKURDI, PUNE-411035, STATE OF MAHARASHTRA, INDIA

DATE OF REGISTRATION	29/01/2014
TITLE	FRONT FENDER FOR MOTORCYCLE

PRIORITY NA

DESIGN NUMBER	257765
CLASS	07-05

1)KONINKLIJKE PHILIPS N.V., A COMPANY ORGANIZED AND EXISTING UNDER THE LAWS OF THE KINGDOM OF THE NETHERLANDS, RESIDING AT EINDHOVEN,
WHOSE POST-OFFICE ADDRESS IS HIGH TECH CAMPUS 5, 5656 AE EINDHOVEN, THE NETHERLANDS

DATE OF REGISTRATION	25/10/2013
TITLE	IRON WITH STEAM GENERATOR

PRIORITY

PRIORITY NUMBER	DATE	COUNTRY
002231514-0003	02/05/2013	OHIM

DESIGN NUMBER	258822
CLASS	09-03
1)ZAMYA LIMITED, 319 ORDSALL LANE, MANCHESTER, SALFORD, M5, 3FT, UNITED KINGDOM, A PRIVATE LIMITED COMPANY ORGANIZED AND EXISTING UNDER	
DATE OF REGISTRATION	18/12/2013
TITLE	CONTAINER FOR COSMETICS
PRIORITY NA	

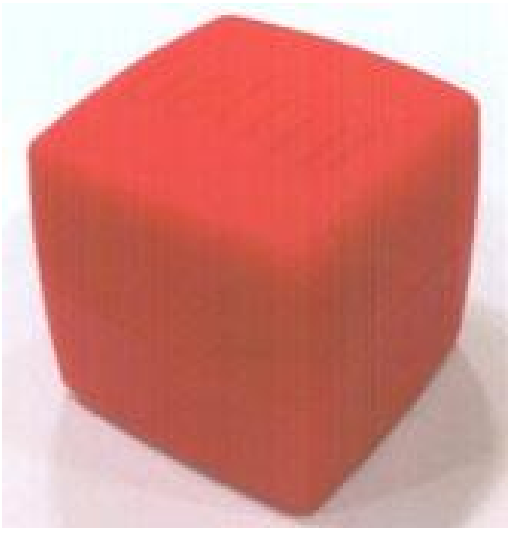

DESIGN NUMBER	259102
CLASS	06-11
1)HONDA ACCESS CORP., OF 18-4, 8-CHOME, NOBIDOME, NIIZA-SHI, SAITAMA, JAPAN	
DATE OF REGISTRATION	30/12/2013
TITLE	A SET OF FLOOR MATS FOR VEHICLE

PRIORITY

PRIORITY NUMBER	DATE	COUNTRY
2013-016441	19/07/2013	JAPAN

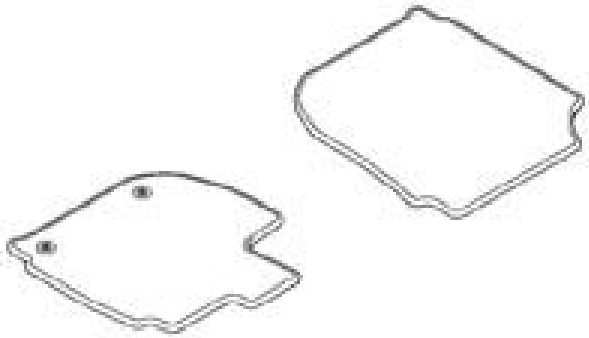

DESIGN NUMBER	257411
CLASS	12-16
1)VOLVO LASTVAGNAR AB, OF SE 405 08 GÖTEBORG, SWEDEN.	
DATE OF REGISTRATION	10/10/2013
TITLE	ROOF AIR DEFLECTOR FOR VEHICLES

PRIORITY

PRIORITY NUMBER	DATE	COUNTRY
2013/0162	11/04/2013	SWEDEN

DESIGN NUMBER	260133
CLASS	08-07

1)SURESH MARUTI MORE. (AN INDIAN NATIONAL) 102/1ST FLOOR UTKARSH CO.OP.HSG.LTD. ANANDROA PAWAR HIGH SCHOOL, RAM MANDIR ROAD, VAZIRA NAKA, BORIVALI (WEST), MUMBAI-400092, STATE OF MAHARASHTRA, INDIA.

PROPRIETOR OF PACK SEALS INDUSTRIES. AN INDIAN PROPRIETORSHIP FIRM OF ABOVE ADDRESS

DATE OF REGISTRATION	05/02/2014
TITLE	SEAL

PRIORITY NA

DESIGN NUMBER	258498
CLASS	26-04

1)KONINKLIJKE PHILIPS N.V., A COMPANY ORGANIZED AND EXISTING UNDER THE LAWS OF THE KINGDOM OF THE NETHERLANDS, RESIDING AT EINDHOVEN,

WHOSE POST-OFFICE ADDRESS IS HIGH TECH CAMPUS 5, 5656 AE EINDHOVEN, THE NETHERLANDS

DATE OF REGISTRATION	29/11/2013
TITLE	LED BULB

PRIORITY

PRIORITY NUMBER	DATE	COUNTRY
002282392-0003	26/07/2013	OHIM

DESIGN NUMBER	256484
CLASS	11-02

1)MA DESIGN INDIA PRIVATE LIMITED, A COMPANY INCORPORATED IN INDIA HAVING ITS PRINCIPAL PLACE OF BUSINESS AT

A-41, SECTOR-80, PHASE-II, NOIDA-201305, U.P. INDIA

DATE OF REGISTRATION	16/09/2013
TITLE	DECORATIVE ARTICLE

PRIORITY NA

DESIGN NUMBER	257416
CLASS	12-16
1)VOLVO LASTVAGNAR AB, OF SE 405 08 GÖTEBORG, SWEDEN.	
DATE OF REGISTRATION	10/10/2013
TITLE	FENDER FOR VEHICLE

PRIORITY

PRIORITY NUMBER	DATE	COUNTRY
2013/0171	11/04/2013	SWEDEN

DESIGN NUMBER	257229
CLASS	15-03
1)RAVANDS CONTROLS INCORPORATION, AN INDIAN COMPANY OF MALAIAH PALLI ROAD, CHANDRAGIRI-517101, TIRUPATI, ANDRHA PRADESH, INDIA	
DATE OF REGISTRATION	07/10/2013
TITLE	VENTURI INJECTOR BARREL
PRIORITY NA	

DESIGN NUMBER	259575
CLASS	05-05
1)PARRY MURRAY & CO. LTD., COMPANY REGISTERED UNDER THE LAWS OF ENGLAND AND WALES, HAVING ITS PRINCIPAL PLACE OF BUSINESS AT 3RD FLOOR, SIMPSON HOUSE, 6 CHERRY ORCHARD ROAD, CROYDON, CRO 6BA, UNITED KINGDOM	
DATE OF REGISTRATION	22/01/2014
TITLE	TEXTILE FABRIC
PRIORITY NA	

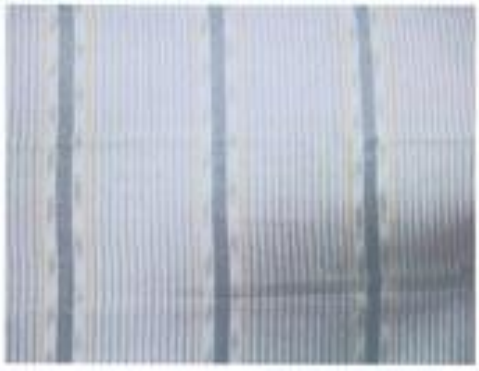

DESIGN NUMBER	259667
CLASS	15-05

1)LG ELECTRONICS INC.
128 YEOUI-DAERO, YEONGDEUNGPO - GU, SEOUL 150 - 721, REPUBLIC OF KOREA A CORPORATION INCORPORATED UNDER THE LAWS OF THE REPUBLIC OF KOREA

DATE OF REGISTRATION	24/01/2014
TITLE	WASHING MACHINE

PRIORITY NA

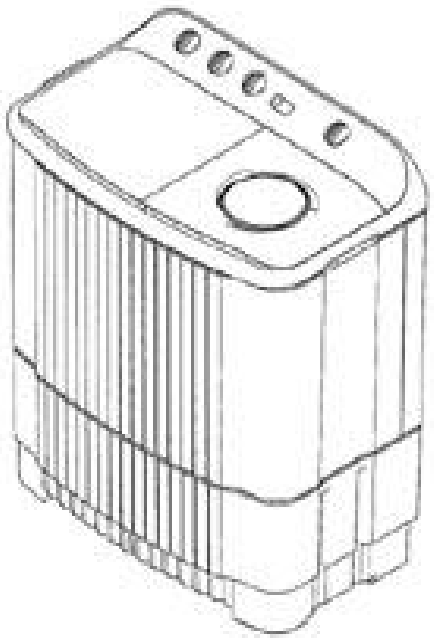

DESIGN NUMBER	259058
CLASS	14-03

1)NOKIA CORPORATION
A FINNISH CORPORATION OF THE ADDRESS KEILALAHDENTIE 4, ESPOO, FINLAND 02150

DATE OF REGISTRATION	27/12/2013
TITLE	MOBILE PHONE COVER

PRIORITY

PRIORITY NUMBER	DATE	COUNTRY
29/465240	26/08/2013	U.S.A.

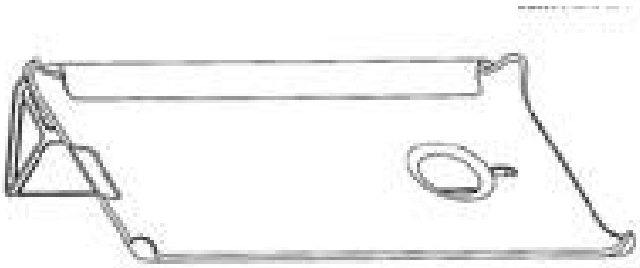

DESIGN NUMBER	257582
CLASS	26-05

1)M/S SHREE SANT KRIPA INTELLECTUAL, HAVING OFFICE AT
7, AKSHAY COMPLEX, OFF. DHOLE PATIL ROAD, PUNE-411001, MAHARASHTRA, INDIA, AN INDIAN COMPANY

DATE OF REGISTRATION	21/10/2013
TITLE	CEILING FIXTURES FOR LAMPS

PRIORITY NA

DESIGN NUMBER	257301
CLASS	09-03

1)INTERNATIONAL COSMETIC SUPPLIERS LTD., A CORPORATION ORGANIZED AND EXISTING UNDER THE LAW OF TAIWAN, OF
4F, #96, SECTION 1 CHIEN KUO NORTH ROAD, TAIPEI 10489, TAIWAN

DATE OF REGISTRATION	08/10/2013
TITLE	CONTAINER

PRIORITY NA

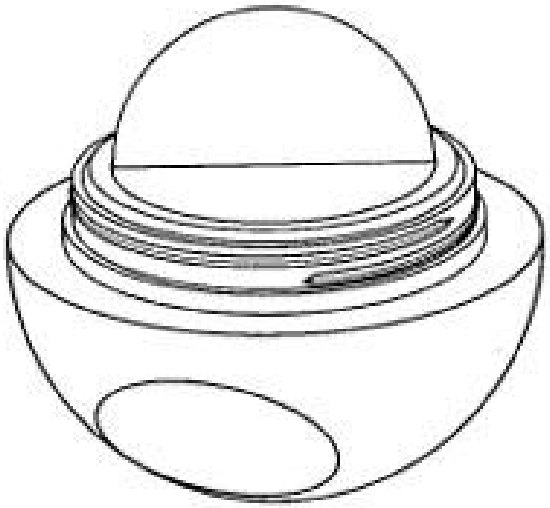

DESIGN NUMBER	257160
CLASS	09-07

1)RECKITT BENCKISER LLC, A LIMITED LIABILITY COMPANY INCORPORATED IN THE STATE OF DELAWARE, U.S.A. OF
MORRIS CORPORATE CENTER IV, 399 INTERPACE PARKWAY, PARSIPPANY, NEW JERSEY 07054, U.S.A.

DATE OF REGISTRATION	03/10/2013
TITLE	DISPENSER

PRIORITY

PRIORITY NUMBER	DATE	COUNTRY
002219253-0001	12/04/2013	OHIM

DESIGN NUMBER	258214
CLASS	16-03

1)PANASONIC CORPORATION, A JAPANESE COMPANY ORGANIZED AND EXISTING UNDER THE LAWS OF JAPAN,
OF 1006, OAZA KADOMA, KADOMA-SHI, OSAKA 571-8501, JAPAN

DATE OF REGISTRATION	19/11/2013
TITLE	CARTRIDGE

PRIORITY

PRIORITY NUMBER	DATE	COUNTRY
2013-010978	20/05/2013	JAPAN

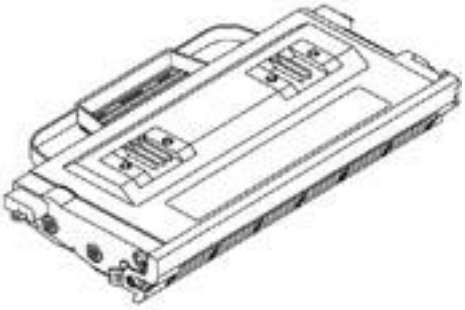

DESIGN NUMBER	259226
CLASS	06-01
1)QUADRIFOGLIO SISTEMI D'ARREDO S.P.A., OF VIA CORNARÈ, 12, 31040 MANSUE'. FRAZIONE BASALGHELLE - ITALY, AN ITALIAN JOINT STOCK COMPANY.	
DATE OF REGISTRATION	03/01/2014
TITLE	BODY OF A CHAIR

PRIORITY

PRIORITY NUMBER	DATE	COUNTRY
TV2013O000027	10/07/2013	ITALY

DESIGN NUMBER	259320
CLASS	09-03
1)HAMILTON HOUSEWARES PVT. LTD. AN INDIAN COMPANY INCORPORATED UNDER THE COMPANIES ACT 1956, HAVING REGISTERED OFFICE AT KAISER-I-HIND BLDG., 3RD FLOOR, CURRIMBHOY ROAD, BALLARD ESTATE, MUMBAI 400001, MAHARASHTRA, INDIA	
DATE OF REGISTRATION	10/01/2014
TITLE	CONTAINER
PRIORITY NA	

DESIGN NUMBER	259517
CLASS	06-01
1)THE SUPREME INDUSTRIES LTD., (AN INDIAN PUBLIC LIMITED COMPANY), 601 CENTRAL PLAZA, 2/6, SARAT BOSE ROAD, KOLKATA - 700020, WEST BENGAL, INDIA	
DATE OF REGISTRATION	20/01/2014
TITLE	CHAIR
PRIORITY NA	

DESIGN NUMBER	257247
CLASS	12-16
1)VOLVO LASTVAGNAR AB, OF 405 08 GÖTEBORG, SWEDEN	
DATE OF REGISTRATION	08/10/2013
TITLE	GRILLE FOR VEHICLE
PRIORITY	

PRIORITY NUMBER	DATE	COUNTRY
002219360-0003	12/04/2013	OHIM

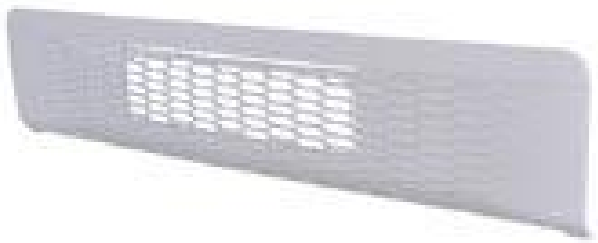

DESIGN NUMBER	259267
CLASS	06-08
1)KUSHAL KARYASHALA PRIVATE LIMITED (A COMPANY INCORPORATED UNDER THE INDIAN COMPANIES ACT 1956), 1, RAJ NAGAR ENCLAVE, PITAM PURA, DELHI-110034 (INDIA)	
DATE OF REGISTRATION	07/01/2014
TITLE	CLOTH HANGER
PRIORITY NA	

DESIGN NUMBER	259778
CLASS	07-02
1)EAGLE HOME APPLIANCES PVT. LTD., AN INDIAN COMPANY HAVING ADDRESS FOR SERVICE AT 4TH FLOOR, PARMAR GALLERY, SHIVARKAR ROAD, OPPOSITE PARMAR PARK, WANAWADI, PUNE 411040, MAHARASHTRA, INDIA	
DATE OF REGISTRATION	29/01/2014
TITLE	PRESSURE COOKER
PRIORITY NA	

DESIGN NUMBER	256876
CLASS	19-06

1)KOKUYO S&T CO., LTD., A CORPORATION ORGANIZED AND EXISTING UNDER THE LAWS OF JAPAN, OF
1-1, OIMAZATO-MINAMI 6-CHOME, HIGASHINARI-KU, OSAKA-SHI, OSAKA, JAPAN

DATE OF REGISTRATION	27/09/2013
TITLE	PEN

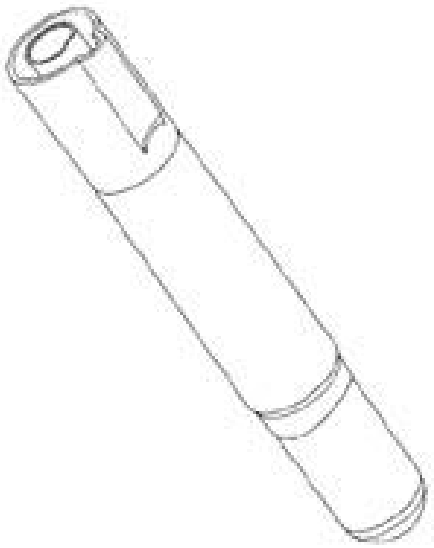

PRIORITY

PRIORITY NUMBER	DATE	COUNTRY
2013-007206	29/03/2013	JAPAN

DESIGN NUMBER	257256
CLASS	21-01

1)VOLVO LASTVAGNAR AB, OF
405 08 GÖTEBORG, SWEDEN

DATE OF REGISTRATION	08/10/2013
TITLE	TOY TRUCK CAB

PRIORITY

PRIORITY NUMBER	DATE	COUNTRY
002219469-0001	12/04/2013	OHIM

DESIGN NUMBER	256483
CLASS	11-02

1)MA DESIGN INDIA PRIVATE LIMITED, A COMPANY INCORPORATED IN INDIA HAVING ITS PRINCIPAL PLACE OF BUSINESS AT
A-41, SECTOR-80, PHASE-II, NOIDA-201305, U.P. INDIA

DATE OF REGISTRATION	16/09/2013
TITLE	DECORATIVE ARTICLE

PRIORITY NA

DESIGN NUMBER	259651
CLASS	02-02

1)SWASTIKA GARMENTS OF 4, RAMKUMAR RAKSHIT LANE, KOLKATA-700 007, WEST BENGAL, INDIA,
AN INDIAN PROPRIETORSHIP FIRM WHOSE PROPRIETOR IS BRIJGOPAL MUNDHARA, AN INDIAN OF THE ABOVE ADDRESS

DATE OF REGISTRATION	24/01/2014
TITLE	GARMENT SET

PRIORITY NA

DESIGN NUMBER	257264
CLASS	12-16

1)VOLVO LASTVAGNAR AB, OF
405 08 GÖTEBORG, SWEDEN

DATE OF REGISTRATION	08/10/2013
TITLE	GRILLE FOR VEHICLE

PRIORITY

PRIORITY NUMBER	DATE	COUNTRY
002219568-0007	12/04/2013	OHIM

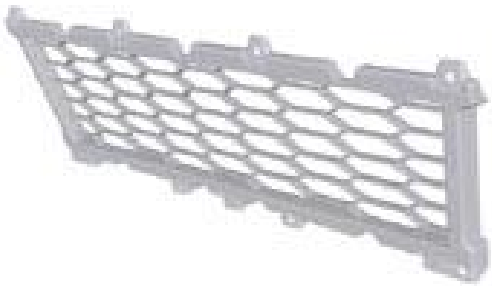

DESIGN NUMBER	257415
CLASS	12-16

1)VOLVO LASTVAGNAR AB, OF
SE 405 08 GÖTEBORG, SWEDEN

DATE OF REGISTRATION	10/10/2013
TITLE	FENDER FOR VEHICLE

PRIORITY

PRIORITY NUMBER	DATE	COUNTRY
2013/0170	11/04/2013	SWEDEN

DESIGN NUMBER	258451
CLASS	26-04

1)KONINKLIJKE PHILIPS N.V., A COMPANY ORGANIZED AND EXISTING UNDER THE LAWS OF THE KINGDOM OF THE NETHERLANDS, RESIDING AT EINDHOVEN,
WHOSE POST-OFFICE ADDRESS IS HIGH TECH CAMPUS 5, 5656 AE EINDHOVEN, THE NETHERLANDS

DATE OF REGISTRATION	28/11/2013
TITLE	LED BULB

PRIORITY

PRIORITY NUMBER	DATE	COUNTRY
002282442-0003	26/07/2013	OHIM

DESIGN NUMBER	257253
CLASS	12-16

1)VOLVO LASTVAGNAR AB, OF
405 08 GÖTEBORG, SWEDEN

DATE OF REGISTRATION	08/10/2013
TITLE	BUMPER FOR VEHICLE

PRIORITY

PRIORITY NUMBER	DATE	COUNTRY
002219360-0009	12/04/2013	OHIM

DESIGN NUMBER	259910
CLASS	12-16

1)TATA MOTORS LIMITED, AN INDIAN COMPANY OF
BOMBAY HOUSE, 24 HOMI MODY STREET, HUTATMA CHOWK, MUMBAI 400 001, MAHARASHTRA, INDIA

DATE OF REGISTRATION	31/01/2014
TITLE	PARCEL TRAY OF A VEHICLE

PRIORITY NA

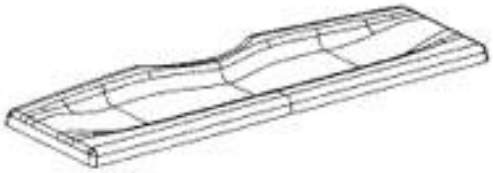

DESIGN NUMBER	258924
CLASS	16-06

1)CARL ZEISS MEDITEC AG, A CORPORATION ORGANIZED AND EXISTING UNDER THE LAWS OF GERMANY
OF GOESCHWITZER STRASSE 51-52, 07745 JENA, GERMANY

DATE OF REGISTRATION	23/12/2013
TITLE	MICROSCOPE

PRIORITY

PRIORITY NUMBER	DATE	COUNTRY
001379713-0002	02/08/2013	OHIM

DESIGN NUMBER	259041
CLASS	20-01

1)LUNA TECHNOLOGY SYSTEMS LTS GMBH,
INDUSTRIESTRASSE 19, 8304 WALLISELLEN, SWITZERLAND, NATIONALITY: SWITZERLAND

DATE OF REGISTRATION	27/12/2013
TITLE	CARTRIDGE FOR COFFEE MACHINES

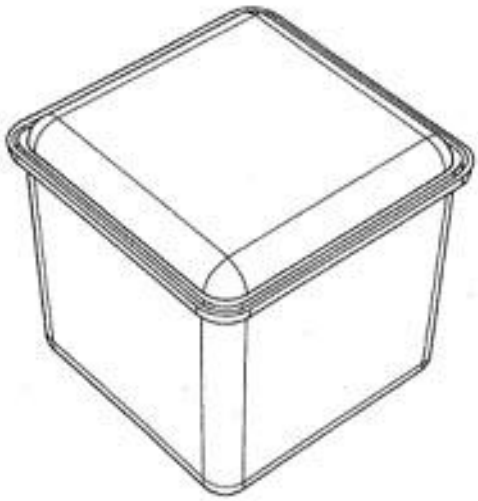

PRIORITY

PRIORITY NUMBER	DATE	COUNTRY
761 415 401	12/09/2013	WIPO

DESIGN NUMBER	259103
CLASS	06-11

1)HONDA ACCESS CORP.,
OF 18-4, 8-CHOME, NOBIDOME, NIIZA-SHI, SAITAMA, JAPAN

DATE OF REGISTRATION	30/12/2013
TITLE	A SET OF FLOOR MATS FOR VEHICLE

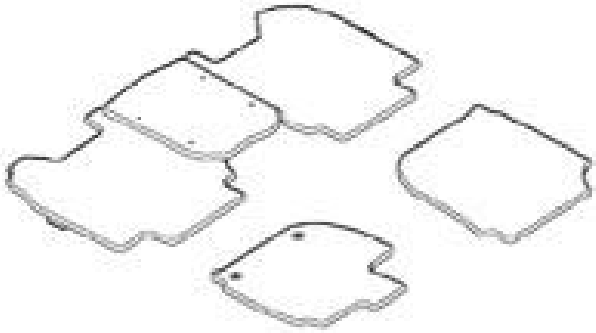

PRIORITY

PRIORITY NUMBER	DATE	COUNTRY
2013-016442	19/07/2013	JAPAN

DESIGN NUMBER	257167
CLASS	03-01
1)DOMINIK MAREK, OF ZA SOKOLOVNOU 601, 285 04 UHLIRSKE JANOVICE, CZECH REPUBLIC	
DATE OF REGISTRATION	03/10/2013
TITLE	SHOPPING BAG
PRIORITY NA	

DESIGN NUMBER	258383
CLASS	02-03
1)M/S STEELBIRD HI-TECH INDIA LIMITED, A COMPANY INCORPORATED UNDER THE COMPANIES ACT, 1956, HAVING ITS REGISTERED OFFICE AT B2B 17, NEAR METRO PILLAR 540, JANAK PURI, NEW DELHI-110058	
DATE OF REGISTRATION	26/11/2013
TITLE	HELMET
PRIORITY NA	

DESIGN NUMBER	250968
CLASS	25-01
1)KAMDHENU ISPAT LIMITED (A COMPANY INCORPORATED UNDER INDIAN COMPANIES ACT, 1956), 2ND FLOOR, BUILDING NO. 9A, DLF CYBER CITY, PHASE-3, GURGAON-122002, (INDIA)	
DATE OF REGISTRATION	14/01/2013
TITLE	ROD FOR CONSTRUCTION
PRIORITY NA	

DESIGN NUMBER	259229
CLASS	07-02
1)NARESH M. JAIN, PROPRIETOR-INDIAN NATIONAL, TRADING AS HAPPY HOME IMPEX, HAVING ITS REGISTERED OFFICE AT BLDG. NO. 2, UNIT NO. 14, PARAM INDUSTRIAL ESTATE, NAIK PADA, VALIV, VASAI (EAST), THANE-401208, STATE OF MAHARASHTRA, INDIA, OF ABOVE ADDRESS	
DATE OF REGISTRATION	03/01/2014
TITLE	CASSEROLE
PRIORITY NA	

DESIGN NUMBER	259663
CLASS	08-09
1)CHANDAN JAIN, AN INDIAN NATIONAL, OF THE ADDRESS 6A, SESSION MARG, NEAR SAMARPAN HOSPITAL, KARNAL-132001, HARYANA, INDIA	
DATE OF REGISTRATION	24/01/2014
TITLE	COVER OF THE DOOR CLOSER
PRIORITY NA	

DESIGN NUMBER	259054
CLASS	14-03
1)NOKIA CORPORATION, A FINNISH CORPORATION, OF THE ADDRESS KEILALAHDENTIE 4, ESPOO, FINLAND 02150	
DATE OF REGISTRATION	27/12/2013
TITLE	MOBILE PHONE

PRIORITY

PRIORITY NUMBER	DATE	COUNTRY
29/464707	20/08/2013	U.S.A.

DESIGN NUMBER	257469
CLASS	08-06

1)JAYESHBHAI GANDUBHAI SARDHARA (ADULT & INDIAN NATIONAL) PROPRIETOR OF MAHARAJA TECHNOCAST (INDIAN PROPRIETORSHIP CONCERN) HAVING PLACE OF BUSINESS AT:
4, PARSANA SOCIETY, 50 FEET MAIN ROAD, NR. SORATHIYAWADI CIRCLE, RAJKOT-360002-GUJARAT (INDIA)

DATE OF REGISTRATION	14/10/2013
TITLE	HANDLE

PRIORITY NA

DESIGN NUMBER	257254
CLASS	12-16

1)VOLVO LASTVAGNAR AB, OF
405 08 GÖTEBORG, SWEDEN

DATE OF REGISTRATION	08/10/2013
TITLE	BUMPER FOR VEHICLE

PRIORITY

PRIORITY NUMBER	DATE	COUNTRY
002219360-0010	12/04/2013	OHIM

DESIGN NUMBER	258452
CLASS	26-04

1)KONINKLIJKE PHILIPS N.V., A COMPANY ORGANIZED AND EXISTING UNDER THE LAWS OF THE KINGDOM OF THE NETHERLANDS, RESIDING AT EINDHOVEN,
WHOSE POST-OFFICE ADDRESS IS HIGH TECH CAMPUS 5, 5656 AE EINDHOVEN, THE NETHERLANDS

DATE OF REGISTRATION	28/11/2013
TITLE	LED BULB

PRIORITY

PRIORITY NUMBER	DATE	COUNTRY
002282392-0007	26/07/2013	OHIM

DESIGN NUMBER	259912
CLASS	12-16
1)TATA MOTORS LIMITED, AN INDIAN COMPANY OF BOMBAY HOUSE, 24 HOMI MODY STREET, HUTATMA CHOWK, MUMBAI 400 001, MAHARASHTRA, INDIA	
DATE OF REGISTRATION	31/01/2014
TITLE	HOOD OF A VEHICLE
PRIORITY NA	

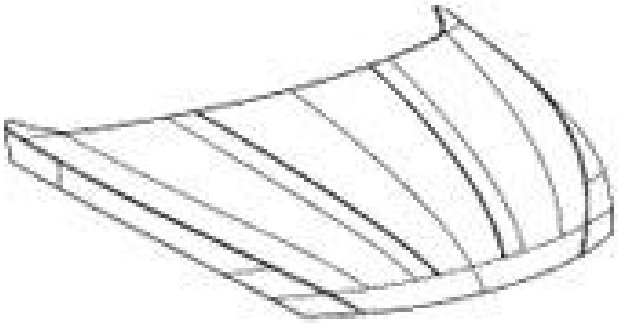

DESIGN NUMBER	257902
CLASS	02-03
1)ALDRIN ERROL JOHN, 19 NGOBIT STREET, SUNNINGHILL, JOHANNESBURG, 2157, SOUTH AFRICA, NATIONALITY-SOUTH AFRICA	
DATE OF REGISTRATION	31/10/2013
TITLE	ATTACHMENT FOR HAT (SET)
PRIORITY NA	

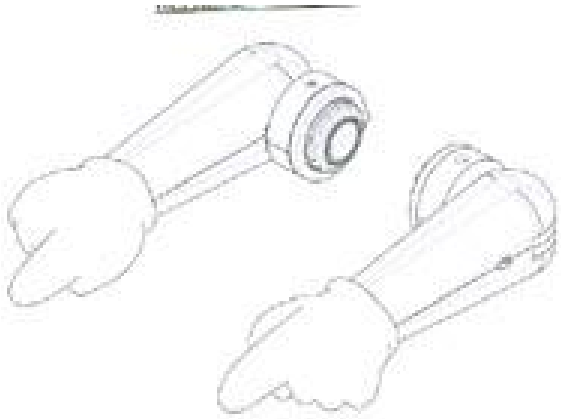

DESIGN NUMBER	257263
CLASS	12-16
1)VOLVO LASTVAGNAR AB, OF 405 08 GÖTEBORG, SWEDEN	
DATE OF REGISTRATION	08/10/2013
TITLE	GRILLE FOR VEHICLE

PRIORITY

PRIORITY NUMBER	DATE	COUNTRY
002219568-0006	12/04/2013	OHIM

DESIGN NUMBER	257414
CLASS	12-16
1)VOLVO LASTVAGNAR AB, OF SE 405 08 GÖTEBORG, SWEDEN.	
DATE OF REGISTRATION	10/10/2013
TITLE	FENDER FOR VEHICLE

PRIORITY

PRIORITY NUMBER	DATE	COUNTRY
2013/0169	11/04/2013	SWEDEN

DESIGN NUMBER	257248
CLASS	12-16
1)VOLVO LASTVAGNAR AB, OF 405 08 GÖTEBORG, SWEDEN	
DATE OF REGISTRATION	08/10/2013
TITLE	FRONT PANEL FOR VEHICLE

PRIORITY

PRIORITY NUMBER	DATE	COUNTRY
002219360-0004	12/04/2013	OHIM

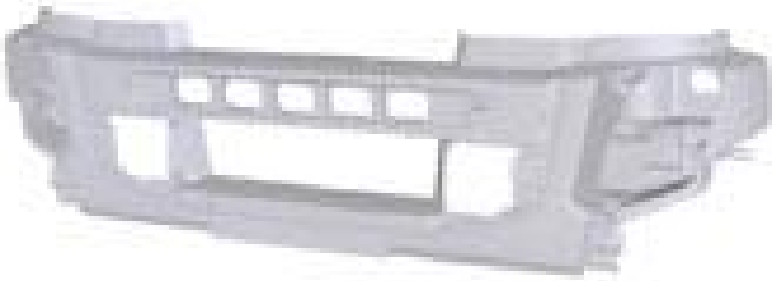

DESIGN NUMBER	259270
CLASS	12-16
1)DEERE & COMPANY, A US CORPORATION OF ONE JOHN DEERE PLACE, MOLINE, ILLINOIS, 61265-8098 USA	
DATE OF REGISTRATION	07/01/2014
TITLE	ROLL OVER PROTECTION STRUCTURE FOR OFF-ROAD VEHICLES

PRIORITY NA

DESIGN NUMBER	259783
CLASS	07-02

1)EAGLE HOME APPLIANCES PVT. LTD., AN INDIAN COMPANY HAVING ADDRESS FOR SERVICE AT
4TH FLOOR, PARMAR GALLERY, SHIVARKAR ROAD, OPPOSITE PARMAR PARK, WANAWADI, PUNE 411040, MAHARASHTRA, INDIA

DATE OF REGISTRATION	29/01/2014
TITLE	TIFFIN BOX

PRIORITY NA

DESIGN NUMBER	259573
CLASS	05-05

1)PARRY MURRAY & CO. LTD., COMPANY REGISTERED UNDER THE LAWS OF ENGLAND AND WALES, HAVING ITS PRINCIPAL PLACE OF BUSINESS AT
3RD FLOOR, SIMPSON HOUSE, 6 CHERRY ORCHARD ROAD, CROYDON, CRO 6BA, UNITED KINGDOM

DATE OF REGISTRATION	22/01/2014
TITLE	TEXTILE FABRIC

PRIORITY NA

DESIGN NUMBER	259056
CLASS	14-03

1)NOKIA CORPORATION, A FINNISH CORPORATION
OF THE ADDRESS KEILALAHDENTIE 4, ESPOO, FINLAND 02150

DATE OF REGISTRATION	27/12/2013
TITLE	MOBILE PHONE COVER

PRIORITY

PRIORITY NUMBER	DATE	COUNTRY
29/465240	26/08/2013	U.S.A.

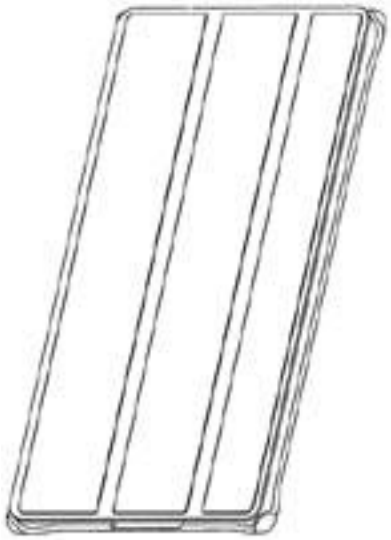

DESIGN NUMBER	259665
CLASS	09-03
1)DONG-MYUNG KIM, 1225-101 HANYANG MOKRYEON APT., 25 SANBON-RO, 432BEON-GIL, GUNPO-SI, GYEONGGI-DO, 435-040, REPUBLIC OF KOREA, NATIONALITY: REPUBLIC OF KOREA	
DATE OF REGISTRATION	24/01/2014
TITLE	FOOD STORAGE CONTAINER
PRIORITY NA	

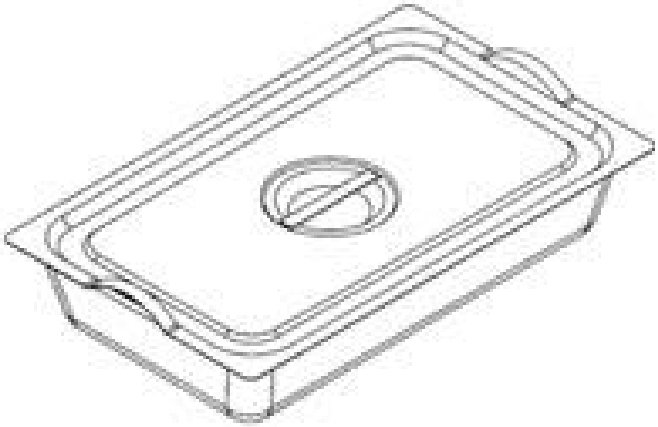

DESIGN NUMBER	257580
CLASS	26-05
1)M/S SHREE SANT KRIPA INTELLECTUAL, HAVING OFFICE AT 7, AKSHAY COMPLEX, OFF. DHOLE PATIL ROAD, PUNE-411001, MAHARASHTRA, INDIA, AN INDIAN	
DATE OF REGISTRATION	21/10/2013
TITLE	CEILING FIXTURES FOR LAMPS
PRIORITY NA	

DESIGN NUMBER	257748
CLASS	12-08
1)DR. ING. H.C.F. PORSCHE AKTIENGESELLSCHAFT, A GERMAN COMPANY OF PORSCHEPLATZ 1, 70435 STUTTGART, GERMANY	
DATE OF REGISTRATION	25/10/2013
TITLE	CAR
PRIORITY NA